REGULAR MEETING AGENDA

City of Black Hawk City Council
211 Church Street, Black Hawk, CO

December 10, 2014
3:00 p.m.

RINGING OF THE BELL:

1. CALL TO ORDER:
RECESS:
PRESENTATION & RECEPTION: Retirement of Jeffrey Young, IT Director
RECONVENE:

2. ROLL CALL & PLEDGE OF ALLEGIANCE:

3. AGENDA CHANGES:

4. CONFLICTS OF INTEREST: (Council disclosures are on file w/City Clerk & Sec. of State)

5. PUBLIC COMMENT: ***Please limit comments to 5 minutes***

(Notify the City Clerk if you wish to address Council on items not on the agenda)

6. APPROVAL OF MINUTES: November 12, 2014

7. PUBLIC HEARINGS:

A. Recreational Marijuana Center Business License Application – 5B1S, LLC, d/b/a 1859 at 231 Gregory Street

B. Resolution 92, A Resolution Summarizing Expenditures and Revenues for Each Fund and Adopting a Budget for the City of Black Hawk, Colorado for the Calendar Year Beginning on the First Day of January 2015 and Ending on the Last Day of December 2015, and Appropriating Sums of Money to Various Funds and Spending Agencies in the Amount, and for the Purposes Set Forth within the Attached 2015 Budget

C. CB26, An Ordinance Levying General Property Taxes for the Year 2014 to Help Defray the Costs of Government for the City of Black Hawk, Colorado for the 2015 Budget Year

D. Resolution 93, A Resolution Approving a Certificate of Appropriateness for full exterior rehabilitation and site work for the property located at 301 High Street

E. Resolution 94, A Resolution Approving a Certificate of Appropriateness for full exterior rehabilitation and site work for the property located at 401 Chase Street

8. ACTION ITEMS:

F. Resolution 95, A Resolution Authorizing the Change of Use of the Sanitary Sewer Tap on City-Owned Property Located on 211 Gregory Street and Described as Lots 3 - 5, Block 28, City of Black Hawk

G. Resolution 96, A Resolution Authorizing the Change of Use of the Sanitary Sewer Tap on City-Owned Property Located on 260 Gregory Street and Described as Lots 2 - 7, Block 33, City of Black Hawk

H. Resolution 97, A Resolution Adopting the 2015 Holiday Schedule

I. Resolution 98, A Resolution Adopting the 2015 City Council Regular Meeting Schedule

J. Resolution 99, A Resolution Establishing a Designated Public Place for the Posting of 2015 Meeting Notices as Required by the Colorado Open Meetings Law

K. Resolution 100, A Resolution Authorizing the Placement of a Veteran's Memorial Plaque at Dory Hill Cemetery

L. Resolution 101, A Resolution Approving the Agreement for the Management and Operation of the Transportation Services for the Black Hawk Tramway between MV Public Transportation and the City of Black Hawk

M. Resolution 90, A Resolution Adopting and Entering into the Trust Agreement for the Colorado Firefighter Health and Circulatory Benefits Trust and Taking Other Actions in connection Therewith (Continued from November 12, 2014, recommend tabling indefinitely)

9. RECESS TO BLACK HAWK URBAN RENEWAL AUTHORITY:

N. Resolution 102, A Resolution Approving the Commercial Lease for the Property Located at 211 and 221 Gregory Street Between 5B1S, LLC and the Black Hawk Urban Renewal Authority

10. RECONVENE:

11. CITY MANAGER REPORTS:

12. CITY ATTORNEY:

13. EXECUTIVE SESSION:

14. ADJOURNMENT:

MISSION STATEMENT

The mission of the City of Black Hawk is to progressively provide cost effective programs and services of the highest quality to the community

City of Black Hawk
City Council

November 12, 2014

MEETING MINUTES

Weekly Register Call Reporter Stacy McBrayer rang the bell.

1. CALL TO ORDER: The regular meeting of the City Council was called to order on Wednesday, November 12, 2014 at 3:00 p.m. by Mayor Spellman.

2. ROLL CALL: Present were: Mayor Spellman, Aldermen Armbright, Bennett, Johnson, Midcap, and Moates.

   Absent: Alderman Torres

   Staff present: City Attorney Hoffmann, City Manager Lewis, Police Chief Cole, City Clerk/Administrative Services Director Greiner, Finance Director Hillis, Public Works Director Isbester, Community Planning and Development Administrator Linker, Fire Chief Taylor, and Deputy City Clerk Martin.

   PLEDGE OF ALLEGIANCE: Mayor Spellman led the meeting in the recitation of the Pledge of Allegiance.

3. AGENDA CHANGES: Deputy City Clerk Martin stated there was one revision made: added Holiday and Annual Bonus to the City Manager Reports.

4. CONFLICTS OF INTEREST: City Attorney Hoffmann asked Council to declare any Conflicts of Interest on any issue appearing on the agenda this afternoon other than those previous disclosures and conflicts that have already been disclosed and are on file with the City Clerk and Secretary of State. There were no conflicts noted from City Council.

   City Attorney Hoffmann asked the audience if there were any objections to any member of Council voting on any issue on the agenda this afternoon. The audience had no objections.

5. PUBLIC COMMENTS: Deputy City Clerk Martin stated no one had signed up for public comments.

6. APPROVAL OF MINUTES

October 22, 2014 and November 5, 2014.

MOTION TO APPROVE

Alderman Bennett **MOVED** and was **SECONDED** by Alderman Armbright to approve the Minutes of both meetings as presented.

MOTION PASSED

There was no discussion and the motion **PASSED** unanimously.

7. PUBLIC HEARINGS:

A. CB23, An Ordinance Approving a Mutual Aid Agreement Between the City of Black Hawk and the Gilpin Ambulance Authority

Mayor Spellman read the title and opened the public hearing.

City Attorney Hoffmann stated that this was a standard form of memorialization of the relationship between the Black Hawk Fire Department and the Gilpin Ambulance Authority.

PUBLIC HEARING:

Mayor Spellman declared a Public Hearing on CB23, An Ordinance Approving a Mutual Aid Agreement Between the City of Black Hawk and the Gilpin Ambulance Authority open and invited anyone wanting to address the Board either "for" or "against" the proposed ordinance to come forward.

No one came forward to speak and Mayor Spellman declared the Public Hearing closed.

MOTION TO APPROVE

Alderman Johnson **MOVED** and was **SECONDED** by Alderman Bennett to approve Ordinance 2014-23, An Ordinance Approving a Mutual Aid Agreement Between the City of Black Hawk and the Gilpin Ambulance Authority.

MOTION PASSED

There was no discussion and the motion **PASSED** unanimously.

B. CB24, An Ordinance Amending the Black Hawk Municipal Code by the Addition thereto of a New Section 2-134 Concerning the Creation of a Violations Bureau

Mayor Spellman read the title and opened the public hearing.

DRAFT

Police Chief Cole said that the Police Department and Municipal Court were looking for ways to streamline operations to reduce work load in the court and to better serve the public. He said they have identified several minor violations for first time offenders that could better be served through a penalty assessment with a fee structure, than having to appear in court.

PUBLIC HEARING: Mayor Spellman declared a Public Hearing on CB24, An Ordinance Amending the Black Hawk Municipal Code by the Addition thereto of a New Section 2-134 Concerning the Creation of a Violations Bureau open and invited anyone wanting to address the Board either "for" or "against" the proposed ordinance to come forward.

No one came forward to speak and Mayor Spellman declared the Public Hearing closed.

MOTION TO APPROVE Alderman Armbright **MOVED** and was **SECONDED** by Alderman Moates to approve Ordinance 2014-24, An Ordinance Amending the Black Hawk Municipal Code by the Addition thereto of a New Section 2-134 Concerning the Creation of a Violations Bureau.

MOTION PASSED There was no discussion and the motion **PASSED** unanimously.

C. CB25, An Ordinance Amending Section 304 of the City of Black Hawk Employee Handbook

Mayor Spellman read the title and opened the public hearing.

City Clerk/Administrative Services Director Greiner explained that Council's earlier decision to change from Columbus Day Holiday to an Employee Birthday Holiday had created an unforeseen issue of having to pay premium pay if the employee is required to work on that day. Staff is recommending changing the Employee Birthday Holiday to a regular Floating Holiday, which will save the City money, yet still allow the employee to take their full 8 hours off.

City Manager Lewis told Council that he will be looking at all the holidays from a Manager's and Employee's perspective and come back to Council with future recommendations.

Mayor Spellman noted a gender specific description on the first page, last paragraph. Staff will make the change.

PUBLIC HEARING: Mayor Spellman declared a Public Hearing on CB25, An Ordinance Amending Section 304 of the City of Black Hawk Employee Handbook

open and invited anyone wanting to address the Board either "for" or "against" the proposed ordinance to come forward.

No one came forward to speak and Mayor Spellman declared the Public Hearing closed.

MOTION TO APPROVE

Alderman Johnson **MOVED** and was **SECONDED** by Alderman Armbright to approve Ordinance 2014-25, An Ordinance Amending Section 304 of the City of Black Hawk Employee Handbook, noting the one correction.

MOTION PASSED

There was no discussion and the motion **PASSED** unanimously.

8. ACTION ITEMS:

D. Resolution 82, A Resolution Approving the License Agreement Between the City of Black Hawk and Edward E. Smith, Shirley J. Smith, Sherell J. Smith, Gregory Street LLC, and Smithloch LLC, as Owners of the Properties located at 125, 131, 135, and 141 Gregory Street (Recommend Tabling Indefinitely)

Mayor Spellman noted the recommendation to table the public hearing indefinitely until the applicant is ready to move forward.

MOTION TO TABLE INDEFINITELY

Alderman Bennett **MOVED** and was **SECONDED** by Alderman Johnson to table this agenda item indefinitely.

MOTION PASSED

There was no discussion and the motion **PASSED** unanimously.

E. Resolution 88, A Resolution Making Findings of Fact in Support of the Decision to Deny the Appeal of the Decision by the Community Planning and Development

DRAFT

Administrator Regarding 101 Hillside Street

Mayor Spellman read the title.

MOTION TO APPROVE

Alderman Moates **MOVED** and was **SECONDED** by Alderman Johnson to approve Resolution 88, A Resolution Making Findings of Fact in Support of the Decision to Deny the Appeal of the Decision by the Community Planning and Development Administrator Regarding 101 Hillside Street.

MOTION PASSED

There was no discussion and the motion **PASSED** unanimously.

F. Resolution 89, A Resolution Making Findings of Fact in Support of the Decision to Deny the Appeal of the Decision by the Community Planning and Development Administrator Regarding 171 Marchant Street

Mayor Spellman read the title.

MOTION TO APPROVE

Alderman Armbright **MOVED** and was **SECONDED** by Alderman Johnson to approve Resolution 89, A Resolution Making Findings of Fact in Support of the Decision to Deny the Appeal of the Decision by the Community Planning and Development Administrator Regarding 171 Marchant Street.

MOTION PASSED

There was no discussion and the motion **PASSED** unanimously.

G. Resolution 90, A Resolution Adopting and Entering into the Trust Agreement for the Colorado Firefighter Health and Circulatory Benefits Trust and Taking Other Actions in the Connection Therewith

Mayor Spellman read the title.

City Manager Lewis recommended tabling this item until the December 10 meeting as there were still some outstanding details that Colorado Municipal League (CML) is working on.

DRAFT

City Attorney Hoffmann noted that this was a requirement by the State for the City to provide this benefit and then be reimbursed through the Department of Local Affairs (DOLA).

MOTION TO APPROVE

Alderman Midcap **MOVED** and was **SECONDED** by Alderman Moates to table Resolution 90, A Resolution Adopting and Entering into the Trust Agreement for the Colorado Firefighter Health and Circulatory Benefits Trust and Taking Other Actions in the connection Therewith to the December 10, 2014 meeting.

MOTION PASSED

There was no discussion and the motion **PASSED** unanimously.

H. Resolution 91, A Resolution Approving the Restructuring of the Information Technology Division and Approving the Associated Job Description

Mayor Spellman read the title.

Finance Director Hillis explained that after much research it was clear that the existing title of Network Administrator did not correlate with surveyed cities or with the duties this position oversees. Staff has recommended a title of IT Manager along with a new job description.

MOTION TO APPROVE

Alderman Bennett **MOVED** and was **SECONDED** by Alderman Armbright to approve Resolution 91, A Resolution Approving the Restructuring of the Information Technology Division and Approving the Associated Job Description

MOTION PASSED

There was no discussion and the motion **PASSED** unanimously.

9. CITY MANAGER REPORTS:

City Manager Lewis had a request from the Fire Department to ask for Council approval to dispose of some outdated fitness equipment. A **MOTION** was made by Alderman Johnson to approve the request, **SECONDED** by Alderman Bennett, and approved unanimously.

Lewis said the auditors like to see a motion for the Holiday bonus and annual bonus for employees since these expenditures fall under Council's budget. A **MOTION** was made by Alderman Moates to approve an annual Holiday bonus of $300 for boards, commission staff and employees and for an annual bonus of 3% for all Black Hawk

DRAFT

working staff, **SECONDED** by Alderman Johnson, and approved unanimously.

Lewis reminded Council there were two meetings scheduled in December on the 3rd and 10th. He suggested cancelling the 3rd if there was no need from the Council to meet. A **MOTION** was made by Alderman Bennett to cancel December 3, 2014 Regular Council Meeting, **SECONDED** by Alderman Moates, and approved unanimously.

Lastly, Lewis informed Council of a survey being conducted by Fire Chief Taylor, who is also the City's Emergency Operations Manager. In preparing his Emergency Operations Plan, Taylor is requesting some data. The surveys were handed out to Council with the request to return to Chief Taylor.

10. CITY ATTORNEY: City Attorney Hoffmann informed Council that he had received a recorded copy of the final rule and order related to the Burton property.

OTHER BUSINESS: Alderman Midcap brought up the residential holiday light contest that the City used to have and asked for Council feedback to reinstate it. Discussion ensued around previous problems the City encountered to other forms of incentives rather than money. A straw poll was taken, and Council was not for reinstating it at this time. It was suggested that different ideas could be considered in advance for next year.

11. EXECUTIVE SESSION: City Attorney Hoffmann recommended item numbers 1 and 5 for Executive Session.

MOTION TO ADJOUN INTO EXECUTIVE SESSION

Alderman Bennett **MOVED** and was **SECONDED** by Alderman Johnson to adjourn into Executive Session at 3:35 p.m. to consider the purchase, acquisition, lease, transfer, or sale of real personal or other property, pursuant to C.R.S., § 24-6-402(4)(a) and to determine positions relative to matters that may be subject to negotiations, develop a strategy for negotiations, and/or instruct negotiators, pursuant to C.R.S., § 24-6-402(4)(e).

MOTION PASSED There was no discussion and the motion **PASSED** unanimously.

MOTION TO ADJOURN

Alderman Bennett **MOVED** and was **SECONDED** by Alderman Johnson to adjourn the Executive Session at 4:30 p.m.

DRAFT

MOTION PASSED There was no discussion and the motion **PASSED** unanimously.

12. ADJOURNMENT: Mayor Spellman declared the Regular Meeting of the City Council closed at 4:30 p.m.

Melissa Greiner
City Clerk

David D. Spellman
Mayor

DRAFT

RECREATIONAL MARIJUANA CENTER BUSINESS LICENSE APPLICATION FOR 5B1S, LLC DBA 1859 AT 231 GREGORY STREET

CITY OF BLACK HAWK
REQUEST FOR COUNCIL ACTION

SUBJECT: Recreational Marijuana Center Business License Application – 5B1S, LLC, d/b/a 1859

RECOMMENDATION: Staff recommends the following motion to the Mayor and Board of Aldermen:

MOTION OF APPROVAL for the conditional approval of the Recreational Marijuana Business License Application – 5B1S, LLC, d/b/a 1859 with the following conditions:

1. All other required permits or licenses related to the operation of the recreational marijuana store are approved;
2. Completed background investigation on all employees; and
3. Inspection by the City of the proposed licensed premises.

SUMMARY AND BACKGROUND OF SUBJECT MATTER:

Please see attached Preliminary Findings and Facts

AGENDA DATE: December 10, 2014

FUNDING SOURCE: N/A

WORKSHOP DATE: N/A

ESTIMATED DATE OF PROJECT COMPLETION: N/A

ORIGINATED BY: Melissa Greiner, City Clerk

STAFF PERSON RESPONSIBLE: Melissa Greiner, City Clerk

RECORD: [ ]Yes [x]No

CITY ATTORNEY REVIEW: [x]Yes [ ]No [ ]N/A INITIALS mg

SUBMITTED BY:

Melissa Greiner

Melissa Greiner, City Clerk

REVIEWED BY:

Jack D Lewis

Jack D. Lewis, City Manager

City of Black Hawk
Marijuana Licensing Authority

IN THE MATTER OF THE APPLICATION FOR A RECREATIONAL MARIJUANA CENTER LICENSE	))	
5B1S, LLC d/b/a 1859 1640 Logan Street, Suite 200 Denver, Colorado 80203	))))	PRELIMINARY FINDINGS AND REPORT

Pursuant to Black Hawk Municipal Code ("Code") Section 6-557, you are hereby advised that with regard to the above named application for a Recreational Marijuana Center License, an investigation has been made, and based on the results thereof, the following has been determined:

1. 5B1S, LLC d/b/a 1859 (the "Applicant") has submitted a complete application, all required identity documentation and the requisite operating fee, as required by Code Section 6-557 to open a recreational marijuana center located at 231 Gregory Street.

2. Pursuant to Code Section 6-557, the Applicant has submitted all required forms and documentation identifying the employees and proposed managers of the recreational marijuana center as well as documentation for all persons having a ten percent (10%) or more financial interest in the Applicant entity.

3. The Applicant has completed a background investigation acknowledgement pursuant to Code Section 6-557.

4. The Applicant has submitted all required information relating to the legal status and registration of 5B1S, LLC d/b/a 1859 pursuant to Code Section 6-557.

5. Pursuant to Code Section 6-557, the Applicant has submitted a copy of a lease demonstrating that the Applicant is entitled to possession of the proposed recreational marijuana center premises. The property owner has also filed a notarized affidavit authorizing the use of the property for a recreational marijuana center.

6. The Applicant has submitted a valid sales tax license for the business pursuant to Code Section 6-557.

7. The Applicant has submitted an acceptable "to scale" diagram of the premises pursuant to Code Section 6-557.

8. The Applicant has submitted an acceptable comprehensive business operation plan pursuant to Code Section 6-557.

9. The zoning of the premises is within the appropriate zone district (HARD), and is one (1) of the four (4) identified Gregory Street addresses within the district, to allow the proposed use.

10. Within the corporate limits of the City of Black Hawk, there are no marijuana businesses currently in operation.

11. The Applicant is not prohibited from being a licensee pursuant to Code Section 6-564.

12. In light of the foregoing, the City of Black Hawk Marijuana Licensing Authority preliminarily finds that the Applicant is eligible to operate as a recreational marijuana center within the City of Black Hawk, subject to the following conditions:

a. A hearing before the Black Hawk Marijuana Licensing Authority;
b. All other required permits or licenses related to the operation of the recreational marijuana center are approved;
c. Completed background investigations on all employees; and
d. Inspection by the City of the proposed licensed premises.

On behalf of The Black Hawk Marijuana Licensing Authority, this report is hereby issued to the applicant and other interested parties this 4th day of December, 2014.

Melissa Greiner

Melissa Greiner
City Clerk

RESOLUTION 92-2014

A RESOLUTION SUMMARIZING EXPENDITURES AND REVENUES FOR EACH FUND AND ADOPTING A BUDGET FOR THE CITY OF BLACK HAWK, COLORADO, FOR THE CALENDAR YEAR BEGINNING ON THE FIRST DAY OF JANUARY 2015 AND ENDING ON THE LAST DAY OF DECEMBER 2015, AND APPROPRIATING SUMS OF MONEY TO VARIOUS FUNDS AND SPENDING AGENCIES IN THE AMOUNT, AND FOR THE PURPOSES SET FORTH WITHIN THE ATTACHED 2015 BUDGET

STATE OF COLORADO
COUNTY OF GILPIN
CITY OF BLACK HAWK

Resolution No. 92-2014

TITLE: **A RESOLUTION SUMMARIZING EXPENDITURES AND REVENUES FOR EACH FUND AND ADOPTING A BUDGET FOR THE CITY OF BLACK HAWK, COLORADO, FOR THE CALENDAR YEAR BEGINNING ON THE FIRST DAY OF JANUARY 2015 AND ENDING ON THE LAST DAY OF DECEMBER 2015, AND APPROPRIATING SUMS OF MONEY TO VARIOUS FUNDS AND SPENDING AGENCIES IN THE AMOUNT, AND FOR THE PURPOSES SET FORTH WITHIN THE ATTACHED 2015 BUDGET.**

WHEREAS, upon due and proper notice, published or posted in accordance with the law, the proposed Budget for 2015 was open for inspection by the public at a designated place, a public hearing was held on December 10, 2014, and interested taxpayers were given the opportunity to file or register any objections to said proposed Budget, and;

WHEREAS, whatever increases may have been made in the expenditures, like increases were added to the revenues or planned to be expended from reserves and/or fund balances so that the Budget remains in balance, as required by law.

NOW THEREFORE, BE IT RESOLVED BY THE BOARD OF ALDERMEN OF THE CITY OF BLACK HAWK, COLORADO, THAT:

SECTION 1. That the Budget as submitted and summarized by Fund, hereby is approved and adopted as the Budget of the City of Black Hawk for the year stated above.

SECTION 2. That the budget hereby approved and adopted shall be signed by the Mayor and made a part of the public records of the City.

SECTION 3. That the sums for 2015, on the attached budget, are hereby appropriated from the revenue of each fund, for purposes stated.

RESOLVED AND PASSED this 10 day of December 2014.

_____
David D. Spellman, Mayor

ATTEST:

By: _____
Melissa Greiner, City Clerk

CITY OF BLACK HAWK, COLORADO
BUDGET REVISIONS
2015 REQUESTED BUDGET

Department	Account Number	Account Description	Proposed Budget	Proposed Adjustment	Revised Budget	Comments/Notes
FINANCE	010-0000-3110100	Real Property / Property Tax	0	8,500	8,500	Reflect Final Valuations
		TOTAL REVENUE ADJUSTMENTS		**8,500**		
		REQUESTED GENERAL FUND REVENUES		**22,165,500**		
		REVISED GENERAL FUND REVENUES		**22,174,000**		
MAYOR & COUNCIL	010-1101-4113101	Legal Services/City Attorney	0	350,000	350,000	From City Manager
MAYOR & COUNCIL	010-1101-4113102	Legal Services/Other Legal	0	100,000	100,000	From City Manager
MAYOR & COUNCIL	010-1101-4113103	Lobbying Services	0	150,000	150,000	From City Manager
MAYOR & COUNCIL	010-1101-4115808	Community Goodwill Promotions	0	5,000	5,000	From City Clerk
MAYOR & COUNCIL	010-1101-4115812	Live Entertainment (Gazebo)	62,400	(37,400)	25,000	Only Saturday & Holidays
MAYOR & COUNCIL	010-1101-4115813	Residential Paint Program	0	100,000	100,000	Move From Capital
MAYOR & COUNCIL	010-1101-4115825	Summer Flowers	0	30,000	30,000	From PW Admin
MAYOR & COUNCIL	010-1101-4115826	Flags	0	10,000	10,000	New Account
MAYOR & COUNCIL	010-1101-4115827	Holiday Decorations	0	130,000	130,000	From PW Admin
CITY MANAGER	010-1301-4133101	Legal Services/City Attorney	350,000	(350,000)	0	To Council
CITY MANAGER	010-1301-4133109	Legal Services/Other Legal	100,000	(100,000)	0	To Council
CITY MANAGER	010-1301-4133316	Lobbying Services	150,000	(150,000)	0	To Council
CITY MANAGER	010-1301-4135101	Insurance	225,000	(225,000)	0	To Clerk
CLERK	010-1302-4135101	Insurance	0	225,000	225,000	From City Manager
CLERK	010-1302-4135809	Community Goodwill Promotions	5,000	(5,000)	0	To Council
PW ADMIN	010-3101-4315830	Holiday Decorations	160,000	(160,000)	0	To Council
PW ADMIN	010-3101-4315831	Summer Flowers	35,000	(35,000)	0	To Council
		TOTAL EXPENDITURE ADJUSTMENTS		**37,600**		
		REQUESTED GENERAL FUND EXPENDITURES		**27,960,586**		
		REVISED GENERAL FUND EXPENDITURES		**27,998,186**		
PRES. & RESTORATION	203-0000-5025801	Dory Hill Cemetery	0	10,000	10,000	From Cemetery
		TOTAL EXPENDITURE ADJUSTMENTS		**10,000**		
		REQUESTED PRES & REST FUND EXPENDITURES		**7,191,025**		
		REVISED PRES & REST FUND EXPENDITURES		**7,201,025**		
CAPITAL PROJECTS	305-3101-New Account	Residential Paint Program	72,000	(72,000)	0	To Council
		TOTAL EXPENDITURE ADJUSTMENTS		**(72,000)**		
		REQUESTED CAPITAL FUND EXPENDITURES		**9,562,000**		
		REVISED CAPITAL FUND EXPENDITURES		**9,490,000**		
DORY HILL CEMETERY	702-0000-3610100	Interest Income	240	(240)	0	Eliminate Fund
DORY HILL CEMETERY	702-0000-3611000	Sale of Plots	100	(100)	0	Eliminate Fund
		TOTAL REVENUE ADJUSTMENTS		**(340)**		
		REQUESTED CEMTERY FUND REVENUE		**340**		
		REVISED CEMETERY FUND REVENUES		**0**		
DORY HILL CEMETERY	501-3151-4607413	Plot Maintenance	10,000	(10,000)	0	To Preservation
		TOTAL EXPENDITURE ADJUSTMENTS		**(10,000)**		
		REQUESTED CEMETERY FUND EXPENDITURES		**10,000**		
		REVISED CEMETERY FUND EXPENDITURES		**0**		

BLACK HAWK®

2015 PROPOSED ANNUAL BUDGET

Revised Dec. 4, 2014

BLACK HAWK

1864-2014

SESQUICENTENNIAL

Office of the City Manager
201 Selak Street
P.O. Box 68
Black Hawk, CO 80422
www.cityofblackhawk.org
303-582-2219 Office
303-582-0429 Fax

Mayor
David D. Spellman

Aldermen
Linda Armbright
Paul G. Bennett
Hal Midcap
Jim Johnson
Greg Moates
Benito Torres

City Attorney
Corey Y. Hoffmann

City Manager
Jack D. Lewis

City Clerk /
Administrative Services Director
Melissa A. Greiner

Finance Director
Lance R. Hillis

Fire Chief
Donald E. Taylor

Police Chief
Stephen N. Cole

Public Works Director
Thomas Isbester

Community Planning & Development Administrator
Cynthia L. Linker

CELEBRATING 150 YEARS OF MUNICIPAL GOVERNMENT

COLORADO'S SECOND OLDEST MUNICIPAL CORPORATION

December 4, 2014

Dear Mayor and City Council:

We are pleased to present to you the 2015 Annual Operating & Capital Budget. Council is required to adopt an annual budget for each fiscal year in accordance with the procedure set forth in the Local Government Budget Law of Colorado (CRS 29-1-101).

This message is intended to cover the highlights and significant changes to the 2015 Budget when compared to 2014. Each Department's budget is similar to 2014 with the exception of the items listed in the following paragraphs. Due to ambitious capital projects proposed and/or incurred for 2014 and 2015, the General Fund, Capital Projects Fund, Preservation & Restoration Fund and the Water Fund are projected to have significant deficit spending.

The 2015 budget includes a total revenue projection (excluding inter-fund transfers and debt proceeds) of $25.9 million for all funds. This is a decrease of 1.9% compared to the estimated revenue for 2014. We project 2015 Gaming Tax revenue to be flat compared to 2014. Device Fee revenue is budgeted to be up slightly with roughly 8,500 devices currently in use to maintain into 2015. City staff expects sales tax revenue to be flat for 2015. The 2015 budget includes no increase in water rates or device fees and no increase in property tax revenue.

The 2015 budget includes total expenditures (excluding inter-fund transfers) of $39.2 million. No new positions have been proposed for 2015. The 2015 Budget also includes funding for an estimated 3% adjustment pending market comparisons and funding for a City-wide bonus of up to 3.00%. City staff, with assistance from our benefits consultant, has estimated an increase in medical insurance premiums of 16% for the final six months of 2015. Other benefits including Dental and Vision insurance have been increased by 10% for the final six months of 2015. The 2015 Budget also includes the continuation of the City contributing 50% of the deductible to each employee's HSA, plus an additional $1,500 per employee.

Capital Fund projects proposed for 2015 include the following: $6,300,000 for the construction of a commercial building on Gregory Street and $2,805,000 for a parking structure on Gregory Street (with another $1,500,000 from Parking Impact Funds). New capital projects

within the Preservation & Restoration Fund include the rehabilitation of two residential homes, Dory Hill Cemetery improvements and a transfer to the General Fund for reimbursement of the Maryland Mountain purchase.

The 2015 Budget, as currently presented, does not include any revenue or associated expenses for large scale casino construction projects.

Respectfully submitted,

Jack D. Lewis

City Manager

Lance R. Hillis

Finance Director

CITY OF BLACK HAWK
2015 PROPOSED BUDGET
TABLE OF CONTENTS

Revenue, Expenditure & Fund Balance Analysis-All Funds	1
General Fund Summary	2
General Fund Revenue Detail	6
Mayor & Council	7
Municipal Court	9
City Manager	11
City Clerk	13
Information Technology	15
Finance	17
Planning & Zoning	19
Police Department	21
Fire Department	24
Public Works Administration	26
Street Maintenance	28
Fleet Maintenance	29
Facilities Maintenance	30
Transportation	31
Transfer - General Fund	32
Impact Fee Fund Summary	33
Impact Fee Fund Revenue Detail	34
Impact Fee Fund Expenditure Detail	35
Preservation & Restoration Fund Summary	36
Preservation & Restoration Fund Revenue Detail	37
Preservation & Restoration Fund Expenditure Detail	38
Transportation Device Fee Trust Fund Summary	39
Transportation Device Fee Trust Fund Revenue Detail	40
Transportation Device Fee Trust Fund Expenditure Detail	41
Capital Projects Fund Summary	42
Capital Projects Fund Revenue Detail	43
Capital Projects Fund Expenditure Detail	44
Debt Service Fund Summary	45
Debt Service Fund Revenue Detail	46
Debt Service Fund Expenditure Detail	47
Debt Service Amortization Schedules	48
Water Fund Summary	49
Water Fund Revenue Detail	50
Water Fund Expenditure Detail	51
Dory Hill Cemetery Fund Summary	54
Dory Hill Cemetery Fund Revenue Detail	55
Dory Hill Cemetery Fund Expenditure Detail	56
Conservation Trust Fund Summary	57
Conservation trust Fund Revenue Detail	58
Conservation Trust Fund Expenditure Detail	59

CITY OF BLACK HAWK REVENUE, EXPENDITURE & FUND BALANCE ANALYSIS

	GENERAL FUND	IMPACT FEE FUND	PRES & REST. FUND	TRANS DEVICE FUND	CAPITAL FUND	DEBT FUND	WATER FUND	CEMETERY FUND	CON TRUST FUND	TOTAL ALL FUNDS	ALL FUNDS LESS TRNFS
FUND BALANCE - JAN. 1, 2013	9,349,669	1,739,207	6,197,842	55,263	2,906,577	963,890	653,765	118,459	21,875	22,006,547	22,006,547
ACTUAL REVENUES	28,520,228	3,552	3,684,702	647,106	3,815,159	2,354,716	3,001,433	500	1,325	42,028,721	37,281,198
ACTUAL EXPENDITURES	18,593,777	250,000	5,662,462	643,000	6,468,254	1,688,967	3,267,585	6,800	0	36,580,844	31,833,321
ACTUAL GAIN (LOSS)	9,926,451	(246,448)	(1,977,760)	4,106	(2,653,095)	665,749	(266,152)	(6,300)	1,325	5,447,877	5,447,877
FUND BALANCE - DEC. 31, 2013	19,276,120	1,492,759	4,220,082	59,369	253,482	1,629,639	387,613	112,159	23,200	27,454,424	27,454,424
FUND BALANCE - JAN. 1, 2014	19,276,120	1,492,759	4,220,082	59,369	253,482	1,629,639	387,613	112,159	23,200	27,454,424	27,454,424
ESTIMATED REVENUES	31,877,791	2,000	3,655,443	651,100	12,955,300	4,393,597	11,428,000	340	1,250	64,964,821	39,420,774
ESTIMATED EXPENDITURES	40,152,116	0	3,262,878	650,650	12,954,287	3,359,074	9,436,873	112,499	0	69,928,377	44,384,330
ESTIMATED GAIN (LOSS)	(8,274,325)	2,000	392,565	450	1,013	1,034,523	1,991,127	(112,159)	1,250	(4,963,556)	(4,963,556)
FUND BALANCE - DEC. 31, 2014	11,001,795	1,494,759	4,612,647	59,819	254,495	2,664,162	2,378,740	0	24,450	22,490,868	22,490,868
FUND BALANCE - JAN. 1, 2015	11,001,795	1,494,759	4,612,647	59,819	254,495	2,664,162	2,378,740	0	24,450	22,490,868	22,490,868
PROPOSED REVENUES	22,174,000	241	3,410,000	654,950	9,345,500	2,904,944	2,902,500	0	1,250	41,393,385	25,934,141
PROPOSED EXPENDITURES	27,998,186	1,495,000	7,201,025	654,500	9,490,000	2,962,677	4,933,207	0	0	54,734,595	39,275,351
PROPOSED GAIN (LOSS)	(5,824,186)	(1,494,759)	(3,791,025)	450	(144,500)	(57,733)	(2,030,707)	0	1,250	(13,341,210)	(13,341,210)
FUND BALANCE - DEC. 31, 2015	5,177,609	0	821,622	60,269	109,995	2,606,429	348,033	0	25,700	9,149,658	9,149,658

CITY OF BLACK HAWK
2015 BUDGET
GENERAL FUND SUMMARY

	2013 Year-End Actual	2014 Adopted Budget	2014 Amended Budget	June 30, 2014 Y-T-D Actual	2014 Year-End Estimate	2015 City Manager Request
BEGINNING FUND BALANCE	9,349,669	19,276,120	19,276,120	19,276,120	19,276,120	11,001,795
REVENUES	28,520,228	31,513,450	31,513,450	15,134,326	31,877,791	22,174,000
MAYOR & COUNCIL	2,468,876	2,245,423	2,245,423	1,116,495	2,426,095	3,135,786
MUNICIPAL COURT	59,632	64,913	64,913	22,191	56,521	62,633
CITY MANAGER	1,220,590	1,338,702	1,338,702	655,003	1,374,902	272,315
ADMINISTRATIVE SERVICES	223,666	222,619	222,619	161,101	312,443	777,887
INFORMATION TECHNOLOGY	406,236	436,192	436,192	203,638	438,292	403,864
FINANCE	335,104	352,336	352,336	173,123	330,720	351,830
PLANNING	602,974	643,533	643,533	217,403	652,401	701,323
POLICE	2,964,706	3,097,401	3,097,401	1,369,922	2,951,762	3,134,241
DISPATCH	474,691	506,442	506,442	233,774	509,128	522,138
FIRE	2,362,564	2,503,780	2,503,780	1,178,695	2,512,625	2,555,687
PUBLIC WORKS ADMIN	1,061,280	1,222,703	1,222,703	454,909	1,191,703	1,099,238
STREET	895,483	1,134,530	1,134,530	377,087	978,925	1,128,175
FLEET	577,394	628,391	628,391	257,991	604,391	607,942
FACILITIES	308,727	334,361	334,361	150,982	318,811	358,883
TRANSPORTATION	527,332	623,000	623,000	201,707	600,000	681,500
TRANSFERS	4,104,523	24,641,156	24,641,156	1,361,751	24,893,397	12,204,744
TOTAL EXPENDITURES	18,593,777	39,995,482	39,995,482	8,135,771	40,152,116	27,998,186
NET INCREASE (DECREASE)	9,926,451	(8,482,032)	(8,482,032)	6,998,555	(8,274,325)	(5,824,186)
ENDING FUND BALANCE	19,276,120	10,794,088	10,794,088	26,274,675	11,001,795	5,177,609

CITY OF BLACK HAWK
STATE GAMING FUND DISTRIBUTIONS
1992-2015

	Statewide	Black Hawk
1992	$911,473	$263,783
1993	$3,047,939	$1,138,405
1994	$3,773,830	$1,862,385
1995	$4,167,267	$2,155,457
1996	$4,800,795	$2,518,849
1997	$5,169,774	$2,788,369
1998	$5,887,967	$3,226,488
1999	$7,018,050	$4,308,662
2000	$7,159,980	$4,745,778
2001	$8,418,384	$5,871,402
2002	$8,969,622	$6,472,838
2003	$9,098,212	$6,599,843
2004	$9,240,149	$6,710,104
2005	$9,293,021	$6,587,172
2006	$10,014,747	$7,110,170
2007	$10,635,671	$7,530,055
2008	$10,059,170	$7,172,188
2009	$8,528,108	$6,056,663
2010	$9,674,240	$7,180,228
2011	$9,532,735	$7,112,194
2012	$9,119,738	$6,770,143
2013	$9,268,680	$6,864,191
2014	$9,221,937	$6,957,400
2015	$9,164,000	$6,900,000

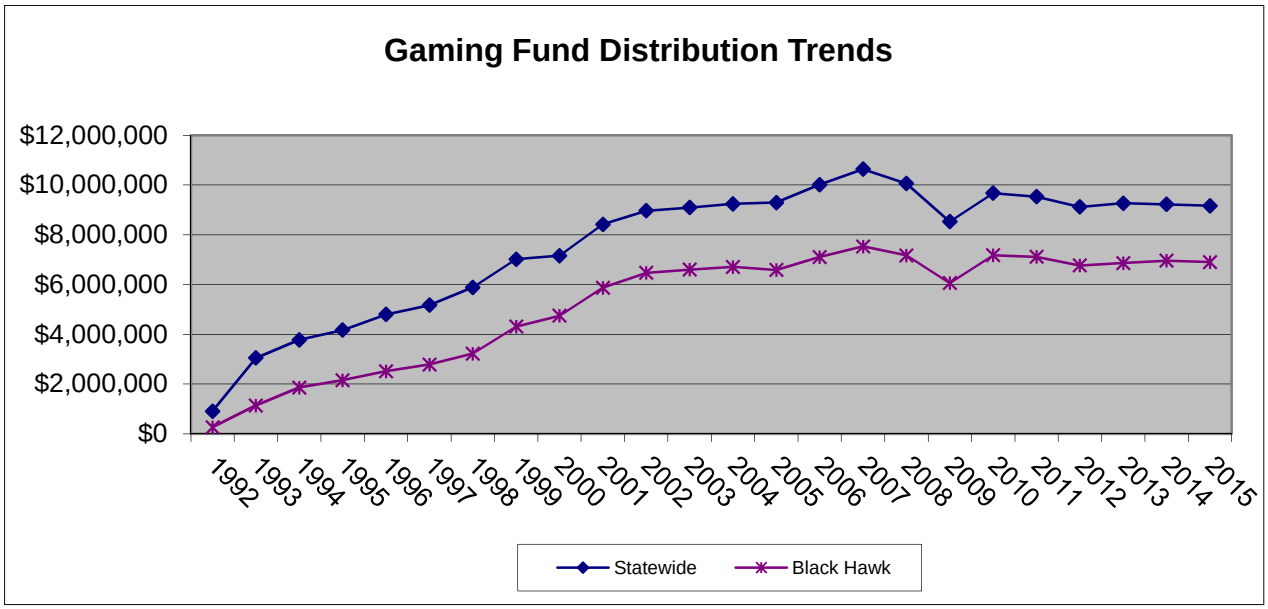

CITY OF BLACK HAWK
DEVICE COUNT & GENERAL DEVICE REVENUES
1990-2015

	Statewide	Black Hawk	Device Fee	General Device Revenue
1992	2,867	733	$800	$1,480,740
1993	10,027	3,183	$800	$2,027,995
1994	11,020	4,624	$800	$2,727,452
1995	12,152	4,395	$750	$2,713,864
1996	12,327	4,926	$750	$2,743,826
1997	13,338	5,400	$750	$3,038,684
1998	12,959	5,370	$750	$5,562,157
1999	14,252	7,269	$750	$5,979,246
2000	13,471	7,166	$750	$7,102,867
2001	14,774	8,584	$750	$7,225,642
2002	15,818	10,068	$750	$7,306,763
2003	15,303	9,389	$750	$7,133,652
2004	15,400	9,578	$750	$6,279,049
2005	15,797	9,339	$750	$6,460,593
2006	16,375	9,558	$750	$6,899,268
2007	17,168	10,168	$750	$7,528,250
2008	16,470	9,942	$750	$7,372,750
2009	16,574	9,750	$750	$7,029,875
2010	15,758	9,125	$750	$6,689,188
2011	14,885	8,609	$750	$6,412,938
2012	15,064	8,460	$750	$6,380,188
2013	14,595	8,589	$750	$6,325,000
2014	14,321	8,485	$945	$8,000,000
2015	14,340	8,500	$945	$8,032,500

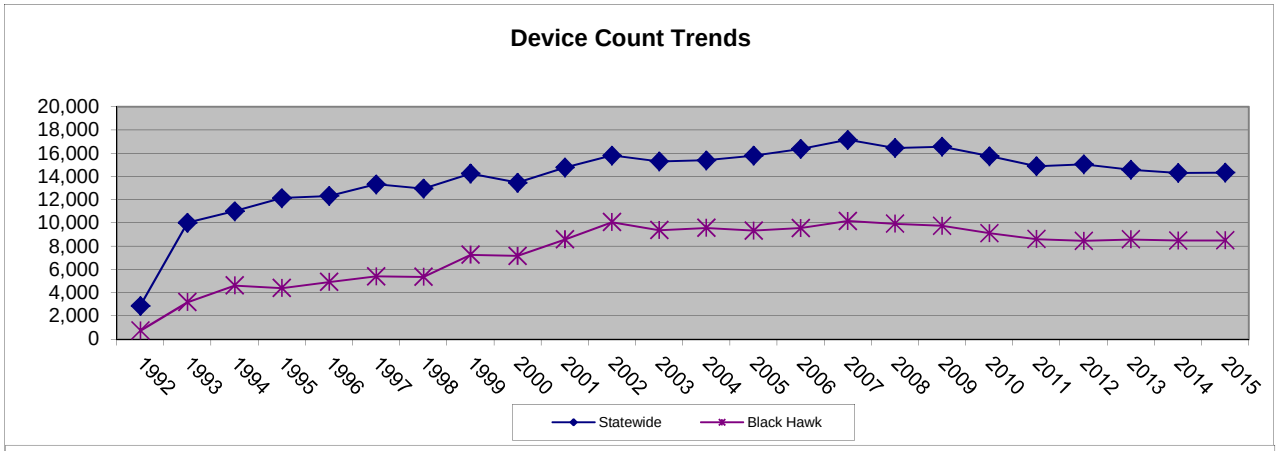

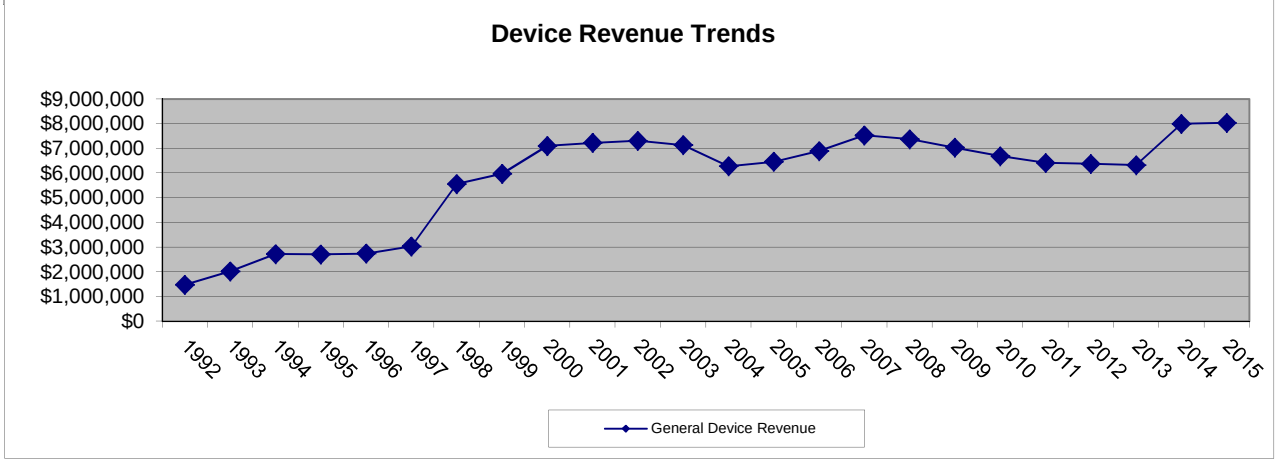

CITY OF BLACK HAWK
SALES TAX TRENDS
1992-2015

	Black Hawk (4.00%)	Gilpin School District (1.5%)
1992	$256,772	-
1993	$413,647	-
1994	$639,607	-
1995	$625,086	-
1996	$636,575	-
1997	$599,012	-
1998	$672,746	-
1999	$884,370	-
2000	$899,934	-
2001	$965,930	-
2002	$1,059,584	-
2003	$1,009,955	-
2004	$1,314,668	-
2005	$1,726,490	-
2006	$1,624,216	-
2007	$1,372,318	-
2008	$1,328,229	-
2009	$1,301,362	$481,326
2010	$1,662,283	$618,731
2011	$1,890,175	$699,969
2012	$1,996,592	$748,621
2013	$2,127,300	$798,377
2014	$2,020,000	$750,000
2015	$2,020,000	$750,000

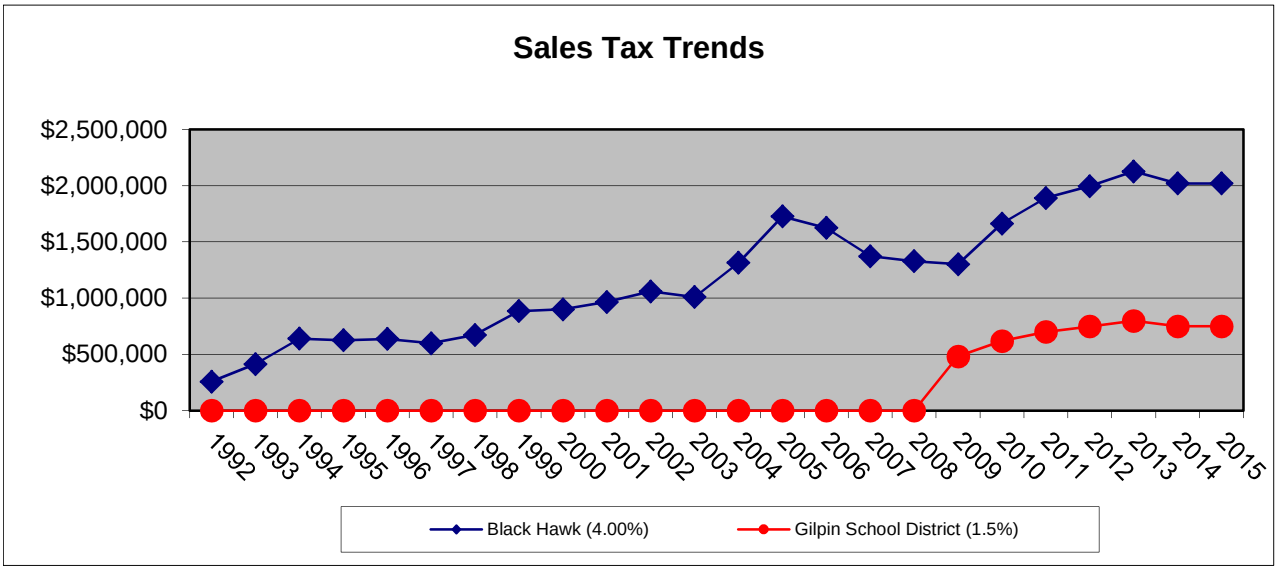

CITY OF BLACK HAWK
2015 BUDGET
GENERAL FUND

Account Number	Account Description	2013 Year-End Actual	2014 Adopted Budget	2014 Amended Budget	June 30, 2014 Year To Date Actual	2014 Year-End Estimate	2015 City Manager Request
GENERAL FUND							
010-0000-3110100	Real Property / Property Taxes	8,740	8,600	8,600	6,191	8,600	8,500
010-0000-3110200	Real Property / Specific Owner	273	400	400	123	300	300
010-0000-3110300	Commercial Improvements Tax	12,634	12,000	12,000	4,928	9,200	8,700
010-0000-3130100	Sales & Use Tax / Sales Tax-City	2,127,300	2,000,000	2,000,000	529,075	2,020,000	2,020,000
010-0000-3130101	Sales Tax-City / Sales Tax-School District	798,377	725,000	725,000	198,376	750,000	750,000
010-0000-3130200	Sales & Use Tax / Use Tax	129,893	10,000	10,000	12,088	25,000	10,000
010-0000-3140200	Occupational Tax / Businesses	17,033	17,000	17,000	5,670	17,000	17,000
010-0000-3180100	Other Taxes / Device Fees	6,340,500	8,007,000	8,007,000	1,993,871	8,000,000	8,032,500
010-0000-3180200	Other Taxes / Franchise Fees	170,728	160,000	160,000	58,175	170,000	170,000
010-0000-3180400	Other Taxes / Ambulance Fee (Non SDMD)	9,305	9,200	9,200	2,348	9,200	9,200
010-0000-3180500	Other Taxes / Lodging Tax	222,439	205,000	205,000	57,630	225,000	225,000
010-0000-3210100	Business Licenses / Sales Tax	737	700	700	238	800	800
010-0000-3210200	Business Licenses / Business	1,755	1,500	1,500	485	1,600	1,600
010-0000-3210300	Business Licenses / Liquor	4,195	3,500	3,500	600	7,500	6,000
010-0000-3210500	Business Licenses / Hotel License	55	400	400	0	400	400
010-0000-3220100	Permits / Building	109,824	50,000	50,000	8,370	135,000	50,000
010-0000-3220200	Permits / Sign	1,150	1,000	1,000	1,240	1,500	1,000
010-0000-3220300	Permits / Shuttle	300	200	200	300	300	300
010-0000-3350200	State Shared Revenues / Cigarette	10,933	10,000	10,000	3,256	10,000	10,000
010-0000-3350300	State Shared Revenues / Highway Users	12,847	12,500	12,500	4,071	12,800	12,800
010-0000-3350400	County Shared Revenues / Road & Bridge	93,117	95,000	95,000	23,240	90,000	90,000
010-0000-3350500	State Shared Revenues / Gaming	6,864,191	6,900,000	6,900,000	0	6,957,400	6,900,000
010-0000-3410300	Miscellaneous Fees / Plan Review	70,630	20,000	20,000	5,440	90,000	20,000
010-0000-3410800	Miscellaneous Fees / Services Billed Out	115,463	100,000	100,000	76,680	125,000	100,000
010-0000-3510100	Court Fines / Municipal Court	28,106	30,000	30,000	12,692	30,000	30,000
010-0000-3510200	Court Fines / County Court	6,505	8,000	8,000	4,454	8,000	8,000
010-0000-3510300	Court Fines / Parking	2,215	5,000	5,000	810	1,500	1,500
010-0000-3510600	Court Fines / Victim Service Surcharge	8,618	8,000	8,000	4,625	8,000	8,000
010-0000-3610100	Revenue / Int Income On Investments	20,390	20,000	20,000	15,058	60,000	20,000
010-0000-3610300	Revenue / Interest/Penalties	210	100	100	24	100	100
010-0000-3610900	Revenue / Other	299,717	50,000	50,000	47,040	100,000	50,000
010-0000-3611100	Revenue / Copies	583	200	200	0	200	200
010-0000-3611200	Revenue / Police Dept Revenue	2,079	1,000	1,000	1,162	1,625	1,500
010-0000-3611500	Revenue / Gilpin Ambulance Maintenance IGA	39,117	35,000	35,000	12,679	25,000	25,000
010-0000-3612000	Revenue / Silver Dollar Ambulance	215,821	226,100	226,100	0	226,116	226,100
010-0000-3630201	Commercial Buildings / Sewer Charges	192	400	400	0	0	0
010-0000-3630202	Commercial Buildings / Other Commercial Revenue	131,256	130,000	130,000	43,387	100,000	105,000
010-0000-3640000	Miscellaneous Revenues / Inception Of Debt	10,000,000	12,000,000	12,000,000	12,000,000	12,000,000	0
010-0000-3950400	Transfer In / Preservation Fund	0	0	0	0	0	2,600,000
010-0000-3951300	Transfer In / Transportation Device Fee Fund	643,000	650,650	650,650	0	650,650	654,500
TOTAL	**GENERAL FUND**	28,520,228	31,513,450	31,513,450	15,134,326	31,877,791	22,174,000

12/5/2014

CITY OF BLACK HAWK
2015 BUDGET
GENERAL FUND

MAYOR & COUNCIL	2013 Year-End Actual	2014 Amended Budget	2014 Year-End Estimate	2015 Proposed Budget
STAFFING PLAN				
Mayor	1.00	1.00	1.00	1.00
Alderman	6.00	6.00	6.00	6.00
TOTAL STAFF	7.00	7.00	7.00	7.00
EXPENDITURES BY TYPE				
Personnel	205,950	259,823	256,938	267,586
Professional Services	0	0	0	600,000
General Services	387	0	0	0
Program Expenses	2,261,647	1,983,500	2,167,057	2,266,100
Supplies	891	2,100	2,100	2,100
Capital Outlay	0	0	0	0
Debt Service	0	0	0	0
Transfers	0	0	0	0
MAYOR & COUNCIL	2,468,876	2,245,423	2,426,095	3,135,786

CITY OF BLACK HAWK
2015 BUDGET
GENERAL FUND

Account Number	Account Description	2013 Year-End Actual	2014 Adopted Budget	2014 Amended Budget	June 30, 2014 Year To Date Actual	2014 Year-End Estimate	2015 City Manager Request
MAYOR & COUNCIL							
010-1101-4111201	Regular Salaries/Wages / Full-Time	75,857	76,440	76,440	49,225	97,457	99,616
010-1101-4111202	Regular Salaries/Wages / Medical Stipend	114,482	153,300	153,300	68,180	137,045	144,615
010-1101-4112100	Council / Group Health Insurnce	153	147	147	75	151	151
010-1101-4112200	Council / Fica & Medicare Expense	12,876	16,583	16,583	8,075	16,415	17,074
010-1101-4112301	Retirement / 401A	2,194	13,006	13,006	2,694	5,446	5,739
010-1101-4112600	Council / Workers Compensation	389	347	347	424	424	391
010-1101-4113101	Legal Services / City Attorney	0	0	0	0	0	350,000
010-1101-4113102	Legal Services / Other Legal	0	0	0	0	0	100,000
010-1101-4113103	Lobbying Services	0	0	0	0	0	150,000
010-1101-4115058	Other Purchased Services / Travel & Training	387	0	0	0	0	0
010-1101-4115806	Council Discretionary-Other	52,346	275,000	10,000	20,600	22,000	30,600
010-1101-4115808	Community Goodwill - Promotions	0	0	0	0	0	5,000
010-1101-4115809	Community Goodwill - Parades	14,210	14,000	14,000	1,592	3,000	3,000
010-1101-4115811	Program Expenses / Marketing	35,081	100,000	100,000	13,258	15,000	100,000
010-1101-4115812	Program Expenses / Live Entertainment	60,000	0	50,000	31,525	62,400	25,000
010-1101-4115813	Program Expenses / Residential Paint Program	0	0	0	0	36,855	100,000
010-1101-4115815	Program Expenses / Annual Bonus	0	0	215,000	0	215,000	215,000
010-1101-4115825	Program Expenses / Flowers	0	0	0	0	0	30,000
010-1101-4115826	Program Expenses / Flags	0	0	0	0	0	10,000
010-1101-4115827	Program Expenses / Holiday Decorations	0	0	0	0	0	130,000
010-1101-4115828	Program Expenses / Fireworks	75,700	80,000	80,000	78,850	83,052	85,000
010-1101-4115830	Program Expenses / Scholarship Fund	33,000	50,000	50,000	10,500	25,000	50,000
010-1101-4115831	Program Expenses / Sales Tax-School District	798,377	750,000	750,000	196,342	750,000	750,000
010-1101-4115832	Program Expenses / Ambulance	479,602	502,500	502,500	293,113	502,500	502,500
010-1101-4115833	Program Expenses / Preservation/Restoration/Acquis	535,601	0	0	6,253	6,250	0
010-1101-4115834	Program Expenses / Sales Tax Rebate	12,528	12,000	12,000	2,579	5,000	5,000
010-1101-4115835	Gregory St Redevelopment (Lodging Tax)	165,201	200,000	200,000	116,995	225,000	225,000
010-1101-4115836	Program Expenses / Device Tax Rebate	0	0	0	216,000	216,000	0
010-1101-4116206	Operating Supplies / Uniforms	891	2,100	2,100	214	2,100	2,100
TOTAL	**MAYOR & COUNCIL**	2,468,876	2,245,423	2,245,423	1,116,495	2,426,095	3,135,786

CITY OF BLACK HAWK
2015 BUDGET
GENERAL FUND

MUNICIPAL COURT	2013 Year-End Actual	2014 Amended Budget	2014 Year-End Estimate	2015 Proposed Budget
STAFFING PLAN				
Municipal Court Clerk	0.25	0.25	0.25	0.25
Municpal Judge	1.00	1.00	1.00	1.00
TOTAL STAFF	1.25	1.25	1.25	1.25
EXPENDITURES BY TYPE				
Personnel	37,234	39,013	38,921	40,033
Professional Services	17,888	19,000	11,000	22,000
General Services	4,510	6,900	6,600	600
Program Expenses	0	0	0	0
Supplies	0	0	0	0
Capital Outlay	0	0	0	0
Debt Service	0	0	0	0
Transfers	0	0	0	0
MUNICIPAL COURT	59,632	64,913	56,521	62,633

CITY OF BLACK HAWK
2015 BUDGET
GENERAL FUND

Account Number	Account Description	2013 Year-End Actual	2014 Adopted Budget	2014 Amended Budget	June 30, 2014 Year To Date Actual	2014 Year-End Estimate	2015 City Manager Request
MUNICIPAL COURT							
010-1201-4121201	Regular Salaries/Wages / Full-Time	32,831	34,363	34,363	15,717	34,363	35,268
010-1201-4121400	Judicial / Overtime	22	200	200	5	100	200
010-1201-4122100	Judicial / Group Health Insurance	787	792	792	430	800	812
010-1201-4122200	Judicial / Social Security	2,510	2,546	2,546	1,204	2,546	2,613
010-1201-4122301	Retirement / 401A	931	959	959	425	959	983
010-1201-4122500	Judicial / Unemployment Compensation	99	100	100	72	100	102
010-1201-4122600	Judicial / Workers Compensation	55	53	53	45	53	55
010-1201-4123109	Legal Services / Other (Translators)	17,010	18,000	18,000	4,144	10,000	21,000
010-1201-4123304	Professional Services / Software/Hardware Support	878	1,000	1,000	0	1,000	1,000
010-1201-4125058	Other Purchased Services / Travel & Training	0	500	500	140	500	500
010-1201-4125501	Dues, & Membership / Memberships	0	100	100	0	100	100
010-1201-4126401	Court Fees / Jury/Witness	4,510	6,300	6,300	10	6,000	0
TOTAL	**MUNICIPAL COURT**	59,632	64,913	64,913	22,191	56,521	62,633

CITY OF BLACK HAWK
2015 BUDGET
GENERAL FUND

CITY MANAGER	2013 Year-End Actual	2014 Amended Budget	2014 Year-End Estimate	2015 Proposed Budget
STAFFING PLAN				
Administrative Assistant	1.00	1.00	1.00	0.00
Asst to the CM for Administration	1.00	1.00	1.00	0.00
City Manager	1.00	1.00	1.00	1.00
TOTAL STAFF	3.00	3.00	3.00	1.00
EXPENDITURES BY TYPE				
Personnel	417,134	436,902	435,902	231,415
Professional Services	551,385	643,000	686,000	30,000
General Services	244,164	253,000	247,600	10,100
Program Expenses	0	0	0	0
Supplies	7,907	5,800	5,400	800
Capital Outlay	0	0	0	0
Debt Service	0	0	0	0
Transfers	0	0	0	0
CITY MANAGER	1,220,590	1,338,702	1,374,902	272,315

CITY OF BLACK HAWK
2015 BUDGET
GENERAL FUND

Account Number	Account Description	2013 Year-End Actual	2014 Adopted Budget	2014 Amended Budget	June 30, 2014 Year To Date Actual	2014 Year-End Estimate	2015 City Manager Request
CITY MANAGER							
010-1301-4131201	Regular Salaries/Wages / Full-Time	347,627	339,235	339,235	153,408	339,235	192,159
010-1301-4131400	Administration / Overtime	854	1,000	1,000	0	0	0
010-1301-4132100	Administration / Group Health Insurance	27,740	51,066	51,066	18,022	51,066	15,746
010-1301-4132200	Administration / Social Security	20,973	24,480	24,480	11,352	24,480	11,320
010-1301-4132301	Retirement / 401A	17,471	17,985	17,985	8,100	17,985	9,645
010-1301-4132500	Administration / Unemployment Compensation	983	899	899	443	899	482
010-1301-4132600	Administration / Workers Compensation	1,486	2,237	2,237	2,009	2,237	2,063
010-1301-4133101	Legal Services / City Attorney	425,564	350,000	350,000	146,881	350,000	0
010-1301-4133109	Legal Services / Other (Legal)	0	100,000	100,000	0	150,000	0
010-1301-4133316	Professional Services / Lobbying	95,000	140,000	140,000	68,333	148,000	0
010-1301-4133317	Professional Services / Public Relations	7,413	25,000	25,000	1,692	13,000	25,000
010-1301-4133319	Professional Services / Other (Consultants)	23,408	28,000	28,000	8,700	25,000	5,000
010-1301-4135058	Other Purchased Services / Travel & Training	20,940	15,000	15,000	7,900	15,000	5,000
010-1301-4135101	Insurance / Property & Casualty	215,162	230,000	230,000	219,603	225,000	0
010-1301-4135409	Advertising / Other (Advertising)	300	0	0	0	0	0
010-1301-4135501	Dues, & Membership / Memberships	7,584	7,500	7,500	6,394	7,500	5,000
010-1301-4135502	Dues, & Membership / Subscriptions	179	500	500	95	100	100
010-1301-4136101	General Supplies / Office	3,359	4,000	4,000	1,791	4,000	500
010-1301-4136102	General Supplies / Stationary/Forms	55	100	100	0	0	0
010-1301-4136104	General Supplies / Coffee	571	800	800	120	500	0
010-1301-4136110	General Supplies / Small Equipment	3,330	0	0	0	0	0
010-1301-4136206	Operating Supplies / Uniforms	592	900	900	161	900	300
TOTAL	**CITY MANAGER**	1,220,590	1,338,702	1,338,702	655,003	1,374,902	272,315

CITY OF BLACK HAWK
2015 BUDGET
GENERAL FUND

CITY CLERK	2013 Year-End Actual	2014 Amended Budget	2014 Year-End Estimate	2015 Proposed Budget
STAFFING PLAN				
City Clerk/Admin. Services Director	1.00	1.00	1.00	1.00
Deputy City Clerk	1.00	1.00	1.00	1.00
Executive Administrative Assistant	0	0.00	0.00	1.00
HR Generalist	0	0.00	0.00	1.00
TOTAL STAFF	2.00	2.00	2.00	4.00
EXPENDITURES BY TYPE				
Personnel	166,434	166,602	168,402	425,187
Professional Services	0	0	14,000	30,000
General Services	50,014	46,317	122,441	309,500
Program Expenses	0	0	0	0
Supplies	7,218	9,700	7,600	13,200
Capital Outlay	0	0	0	0
Debt Service	0	0	0	0
Transfers	0	0	0	0
CITY CLERK	223,666	222,619	312,443	777,887

CITY OF BLACK HAWK
2015 BUDGET
GENERAL FUND

Account Number	Account Description	2013 Year-End Actual	2014 Adopted Budget	2014 Amended Budget	June 30, 2014 Year To Date Actual	2014 Year-End Estimate	2015 City Manager Request
CITY CLERK (ADMINISTRATIVE SERVICES)							
010-1302-4131201	Regular Salaries/Wages / Full-Time	142,512	140,383	140,383	70,042	140,383	314,387
010-1302-4131400	Administration / Overtime	136	200	200	1,000	2,000	1,000
010-1302-4132100	Administration / Group Health Insurance	4,298	6,670	6,670	2,563	6,670	68,379
010-1302-4132200	Administration / Social Security	10,924	10,491	10,491	5,469	10,491	22,457
010-1302-4132301	Retirement / 401A	7,984	8,228	8,228	3,414	8,228	17,613
010-1302-4132500	Administration / Unemployment Compensation	426	411	411	213	411	881
010-1302-4132600	Administration / Workers Compensation	154	219	219	185	219	470
010-1302-4133319	Professional Services / Other (Consultants)	0	0	0	733	14,000	30,000
010-1302-4133400	Administration / Elections Expense	2,723	2,000	2,000	1,849	1,849	0
010-1302-4134506	Repairs & Maintenance / Equipment Maintenance	3,435	3,500	3,500	1,468	3,000	3,000
010-1302-4135058	Other Purchased Services / Travel & Training	2,335	1,600	1,600	1,222	14,000	40,000
010-1302-4135101	Insurance / Property & Casualty	0	0	0	0	0	225,000
010-1302-4135302	Communications / Postage	7,132	8,500	8,500	3,781	7,500	7,500
010-1302-4135401	Advertising / Legal	0	75	75	0	0	0
010-1302-4135402	Advertising / Classifieds	21,490	14,000	14,000	13,397	24,000	25,000
010-1302-4135409	Advertising / Other (Advertising)	0	50	50	0	0	0
010-1302-4135501	Dues, & Membership / Memberships	355	360	360	255	360	2,500
010-1302-4135502	Dues, & Membership / Subscriptions	32	32	32	32	32	500
010-1302-4135809	Program Expenses / Community Good Will	4,370	10,000	10,000	50,862	66,000	0
010-1302-4135901	Other Purchased Services / Records Preservation	2,429	700	700	677	700	500
010-1302-4135902	Other Purchased Services / Codification	3,028	3,000	3,000	0	3,000	3,000
010-1302-4135903	Other Purchased Services / Filing Fees	1,953	2,000	2,000	354	1,500	2,000
010-1302-4135905	Other Purchased Services / Fingerprinting	732	500	500	77	500	500
010-1302-4136101	General Supplies / Office	6,140	8,500	8,500	3,507	7,000	12,000
010-1302-4136110	General Supplies / Small Equipment	503	600	600	0	0	0
010-1302-4136206	Operating Supplies / Uniforms	575	600	600	0	600	1,200
TOTAL	**CITY CLERK (ADMINISTRATIVE SERVICES)**	223,666	222,619	222,619	161,101	312,443	777,887

CITY OF BLACK HAWK
2015 BUDGET
GENERAL FUND

INFORMATION TECHNOLOGY	2013 Year-End Actual	2014 Amended Budget	2014 Year-End Estimate	2015 Proposed Budget
STAFFING PLAN				
Information Technology Director	1.00	1.00	1.00	0.00
Information Technology Manager	0.00	0.00	0.00	1.00
Network Administrator	1.00	1.00	1.00	1.00
TOTAL STAFF	2.00	2.00	2.00	2.00
EXPENDITURES BY TYPE				
Personnel	213,625	242,492	242,592	200,164
Professional Services	2,652	5,000	1,500	5,000
General Services	140,956	147,100	156,100	157,100
Program Expenses	0	0	0	0
Supplies	49,003	41,600	38,100	41,600
Capital Outlay	0	0	0	0
Debt Service	0	0	0	0
Transfers	0	0	0	0
INFORMATION TECHNOLOGY	406,236	436,192	438,292	403,864

CITY OF BLACK HAWK
2015 BUDGET
GENERAL FUND

Account Number	Account Description	2013 Year-End Actual	2014 Adopted Budget	2014 Amended Budget	June 30, 2014 Year To Date Actual	2014 Year-End Estimate	2015 City Manager Request
INFORMATION TECHNOLOGY							
010-1303-4131201	Regular Salaries/Wages / Full-Time	172,707	182,002	182,002	83,148	182,002	139,435
010-1303-4131400	Administration / Overtime	679	0	0	48	100	100
010-1303-4132100	Administration / Group Health Insurance	16,923	34,503	34,503	14,255	34,503	40,687
010-1303-4132200	Administration / Social Security	12,355	13,174	13,174	6,185	13,174	10,110
010-1303-4132301	Retirement / 401A	9,516	10,333	10,333	4,693	10,333	7,929
010-1303-4132500	Administration / Unemployment Compensation	504	517	517	242	517	396
010-1303-4132600	Administration / Workers Compensation	940	1,963	1,963	1,784	1,963	1,507
010-1303-4133304	Professional Services / Software/Hardware Support	2,652	5,000	5,000	1,112	1,500	5,000
010-1303-4134506	Repairs & Maintenance / Equipment Maintenance	25,740	30,000	30,000	17,147	35,000	35,000
010-1303-4134701	Vehicle Maintenance	0	2,100	2,100	0	2,100	2,100
010-1303-4135058	Other Purchased Services / Travel & Training	2,651	2,500	2,500	7,732	8,000	7,500
010-1303-4135301	Communications / Telephone	103,812	105,000	105,000	52,610	105,000	105,000
010-1303-4135501	Dues, & Membership / Memberships	173	0	0	0	0	0
010-1303-4135502	Dues, & Membership / Subscriptions	8,580	7,500	7,500	894	6,000	7,500
010-1303-4136101	General Supplies / Office	568	1,000	1,000	246	500	1,000
010-1303-4136103	General Supplies / Software	10,328	10,000	10,000	1,030	9,000	10,000
010-1303-4136110	General Supplies / Small Equipment	37,657	30,000	30,000	12,300	28,000	30,000
010-1303-4136206	Operating Supplies / Uniforms	450	600	600	213	600	600
TOTAL	**INFORMATION TECHNOLOGY**	406,236	436,192	436,192	203,638	438,292	403,864

CITY OF BLACK HAWK
2015 BUDGET
GENERAL FUND

FINANCE	2013 Year-End Actual	2014 Amended Budget	2014 Year-End Estimate	2015 Proposed Budget
STAFFING PLAN				
Finance Director	1.00	1.00	1.00	1.00
Senior Acountant	1.00	1.00	1.00	0.00
Accountant	0.00	0.00	0.00	1.00
TOTAL STAFF	2.00	2.00	2.00	2.00
EXPENDITURES BY TYPE				
Personnel	274,306	279,236	260,220	279,730
Professional Services	54,793	64,000	65,000	65,000
General Services	3,881	6,000	3,400	5,000
Program Expenses	0	0	0	0
Supplies	2,124	3,100	2,100	2,100
Capital Outlay	0	0	0	0
Debt Service	0	0	0	0
Transfers	0	0	0	0
FINANCE	335,104	352,336	330,720	351,830

CITY OF BLACK HAWK
2015 BUDGET
GENERAL FUND

Account Number	Account Description	2013 Year-End Actual	2014 Adopted Budget	2014 Amended Budget	June 30, 2014 Year To Date Actual	2014 Year-End Estimate	2015 City Manager Request
FINANCE							
010-1501-4151201	Regular Salaries/Wages / Full-Time	212,201	214,320	214,320	94,637	200,000	210,294
010-1501-4152100	Financial Administration / Group Health Insurance	33,915	36,444	36,444	17,608	32,000	41,480
010-1501-4152200	Financial Administration / Social Security	15,520	15,437	15,437	7,124	15,300	15,157
010-1501-4152301	Retirement / 401A	11,756	12,107	12,107	5,311	12,000	11,888
010-1501-4152500	Financial Administration / Unemployment Compensati	625	605	605	273	600	594
010-1501-4152600	Financial Administration / Workers Compensation	287	323	323	277	320	317
010-1501-4153200	Financial Administration / Accounting And Auditing	35,743	40,000	40,000	23,217	40,000	40,000
010-1501-4153304	Professional Services / Software/Hardware Support	18,000	20,000	20,000	18,000	20,000	20,000
010-1501-4153319	Professional Services / Other (Consultants)	1,050	4,000	4,000	4,831	5,000	5,000
010-1501-4154506	Repairs & Maintenance / Equipment Maintenance	0	500	500	0	0	500
010-1501-4155058	Other Purchased Services / Travel & Training	681	500	500	244	500	500
010-1501-4155200	Financial Administration / Printing And Binding	490	1,000	1,000	0	500	1,000
010-1501-4155501	Dues, & Membership / Memberships	1,616	1,000	1,000	674	1,000	1,000
010-1501-4155502	Dues, & Membership / Subscriptions	91	0	0	0	0	0
010-1501-4155805	Program Expenses / Training	941	3,000	3,000	0	1,000	2,000
010-1501-4156101	General Supplies / Office	756	2,000	2,000	678	1,000	1,000
010-1501-4156102	General Supplies / Stationary/Forms	824	500	500	0	500	500
010-1501-4156206	Operating Supplies / Uniforms	543	600	600	40	600	600
010-1501-4156303	Office Expenses / Bank Chgs/Int/Penalties	62	0	0	208	400	0
TOTAL	**FINANCE**	335,104	352,336	352,336	173,123	330,720	351,830

CITY OF BLACK HAWK
2015
GENERAL FUND

PLANNING & ZONING	2013 Year-End Actual	2014 Amended Budget	2014 Year-End Estimate	2015 Proposed Budget
STAFFING PLAN				
Community Planning & Development Administrator	1.00	1.00	1.00	1.00
Permit Technician	1.00	1.00	1.00	1.00
TOTAL STAFF	2.00	2.00	2.00	2.00
EXPENDITURES BY TYPE				
Personnel	190,030	190,455	191,308	199,273
Professional Services	394,832	423,500	423,500	434,000
General Services	10,398	16,378	24,793	54,250
Program Expenses	0	0	0	0
Supplies	7,714	13,200	12,800	13,800
Capital Outlay	0	0	0	0
Debt Service	0	0	0	0
Transfers	0	0	0	0
PLANNING & ZONING	602,974	643,533	652,401	701,323

CITY OF BLACK HAWK
2015 BUDGET
GENERAL FUND

Account Number	Account Description	2013 Year-End Actual	2014 Adopted Budget	2014 Amended Budget	June 30, 2014 Year To Date Actual	2014 Year-End Estimate	2015 City Manager Request
PLANNING & ZONING							
010-1901-4191201	Regular Salaries/Wages / Full-Time	147,080	145,503	145,503	65,891	145,503	151,828
010-1901-4191400	Planning & Zoning / Overtime	9	250	250	746	746	1,000
010-1901-4192100	Planning & Zoning / Group Health Insurance	22,390	24,719	24,719	11,317	24,719	25,581
010-1901-4192200	Planning & Zoning / Social Security	11,193	10,385	10,385	5,072	10,385	10,841
010-1901-4192301	Retirement / 401A	7,913	8,145	8,145	3,656	8,145	8,503
010-1901-4192500	Planning & Zoning / Unemployment Compensation	438	407	407	198	407	425
010-1901-4192600	Planning & Zoning / Workers Compensation	1,008	1,046	1,046	1,403	1,403	1,095
010-1901-4193301	Planning & Zoning / Temporary Employee	5,762	11,040	11,040	0	11,040	36,000
010-1901-4193304	Software/Hardware Support	0	0	0	10,000	10,000	13,000
010-1901-4193319	Professional Services / Other (Consultants)	172,314	323,500	323,500	11,375	323,500	334,000
010-1901-4193321	Professional Services / Planning	91,245	0	0	23,923	0	0
010-1901-4193322	Professional Services / Services Billed Out	131,274	100,000	100,000	75,160	100,000	100,000
010-1901-4194701	Vehicle Operation & Maint / Vehicle Maintenance	1,445	1,500	1,500	0	0	0
010-1901-4194703	Vehicle Operation & Maint / Gas And Oil	362	400	400	230	400	400
010-1901-4195058	Other Purchased Services / Travel & Training	1,285	2,238	2,238	2,153	2,153	3,600
010-1901-4195301	Communications / Conference Calls	107	100	100	25	100	100
010-1901-4195501	Dues, & Membership / Memberships	1,373	900	900	450	900	950
010-1901-4195502	Dues, & Membership / Subscriptions	64	200	200	30	200	200
010-1901-4196101	General Supplies / Office	4,209	10,000	10,000	4,665	10,000	11,000
010-1901-4196102	General Supplies / Stationary/Forms	445	800	800	475	600	600
010-1901-4196107	General Supplies / Books	2,209	800	800	50	600	600
010-1901-4196110	General Supplies / Small Equipment	294	1,000	1,000	582	1,000	1,000
010-1901-4196206	Operating Supplies / Uniforms	557	600	600	0	600	600
TOTAL	**PLANNING & ZONING**	602,974	643,533	643,533	217,403	652,401	701,323

CITY OF BLACK HAWK
2015 BUDGET
GENERAL FUND

POLICE DEPARTMENT	2013 Year-End Actual	2014 Amended Budget	2014 Year-End Estimate	2015 Proposed Budget
STAFFING PLAN				
Police Officers	14.00	15.00	15.00	15.00
Police Sergeants	6.00	6.00	6.00	6.00
Police Detectives	2.00	2.00	2.00	2.00
Police Officer- Grant	1.00	0.00	0.00	0.00
Admin Asst/ Property Evidence Tech	1.00	1.00	1.00	1.00
Records Specialist	0.75	0.75	0.75	0.75
Records Supervisor	1.00	1.00	1.00	1.00
Communications Officer	7.00	7.00	7.00	7.00
Police Chief	1.00	1.00	1.00	1.00
TOTAL STAFF	33.75	33.75	33.75	33.75
EXPENDITURES BY TYPE				
Personnel	3,186,477	3,351,763	3,234,805	3,425,149
Professional Services	62,196	39,980	30,000	33,880
General Services	73,547	98,800	75,585	88,800
Program Expenses	0	0	0	0
Supplies	117,178	113,300	120,500	108,550
Capital Outlay	0	0	0	0
Debt Service	0	0	0	0
Transfers	0	0	0	0
POLICE DEPARTMENT	3,439,397	3,603,843	3,460,890	3,656,379

CITY OF BLACK HAWK
2015 BUDGET
GENERAL FUND

Account Number	Account Description	2013 Year-End Actual	2014 Adopted Budget	2014 Amended Budget	June 30, 2014 Year To Date Actual	2014 Year-End Estimate	2015 City Manager Request
POLICE DEPT - LAW ENFORCEMENT							
010-2101-4211201	Regular Salaries/Wages / Full-Time	2,045,408	2,114,381	2,114,381	896,734	2,004,700	2,144,444
010-2101-4211400	Police / Overtime	65,593	55,000	55,000	29,852	65,000	55,000
010-2101-4212100	Police / Group Health Insurance	292,472	353,715	353,715	171,543	353,715	390,905
010-2101-4212200	Police / Social Security	156,483	153,747	153,747	69,422	153,747	155,210
010-2101-4212301	Retirement / 401A	110,757	120,586	120,586	50,115	110,000	121,733
010-2101-4212500	Police / Unemployment Compensation	6,194	6,029	6,029	2,714	5,900	6,087
010-2101-4212600	Police / Workers Compensation	37,355	53,563	53,563	44,709	45,000	51,232
010-2101-4213304	Professional Services / Software/Hardware Support	13,963	23,880	23,880	13,481	14,000	23,880
010-2101-4213317	Professional Services / Public Relations	2,063	2,000	2,000	980	2,000	2,000
010-2101-4213322	Professional Services / Professional Services	37,208	6,000	6,000	4,908	9,000	0
010-2101-4213323	Professional Services / Investigations/Major	8,928	8,000	8,000	2,103	5,000	8,000
010-2101-4214506	Repairs & Maintenance / Equipment Maintenance	4,267	10,000	10,000	0	2,500	0
010-2101-4214701	Vehicle Operation & Maint / Vehicle Maintenance	9,864	20,000	20,000	4,398	10,000	10,000
010-2101-4214703	Vehicle Operation & Maint / Gas And Oil	28,903	32,000	32,000	7,950	32,000	32,000
010-2101-4215058	Other Purchased Services / Travel & Training	19,357	18,000	18,000	5,948	15,000	18,000
010-2101-4215301	Communications / Telephone	741	4,700	4,700	272	1,400	4,700
010-2101-4215501	Dues, & Membership / Memberships	4,023	3,600	3,600	3,445	3,600	3,600
010-2101-4215502	Dues, & Membership / Subscriptions	832	1,000	1,000	800	800	1,000
010-2101-4215805	Program Expenses / Training	0	0	0	20	0	0
010-2101-4216101	General Supplies / Office	15,834	18,000	18,000	5,572	14,000	16,000
010-2101-4216102	General Supplies / Stationary/Forms	4,855	3,000	3,000	375	1,000	3,000
010-2101-4216105	General Supplies / Victim Service Supplies	11,250	15,000	15,000	7,500	15,000	15,000
010-2101-4216107	General Supplies / Books	2,280	2,700	2,700	(708)	3,400	2,700
010-2101-4216110	General Supplies / Small Equipment	51,714	34,500	34,500	28,817	44,000	34,500
010-2101-4217402	Machinery And Equipment / Vehicles	1,320	0	0	0	0	0
010-2101-4231201	Grant 2009Rkwx0185 / Regular Salaries/Wages	4,265	0	0	0	0	0
010-2101-4232100	Grant 2009Rkwx0185 / Group Health Insurance	526	0	0	0	0	0
010-2101-4232200	Grant 2009Rkwx0185 / Social Security	325	0	0	0	0	0
010-2101-4232301	Grant 2009Rkwxo185 / 401A	115	0	0	0	0	0
010-2101-4232500	Grant 2009Rkwx0185 / Unemployment Compensation	13	0	0	0	0	0
010-2101-4232600	Grant 2009Rkwx0185 / Workers Compensation	76	0	0	74	0	0
010-2102-4215829	Program Expenses / Firing Range Program	9,545	12,000	12,000	7,743	13,000	13,000
010-2102-4216206	Operating Supplies / Uniforms	13,617	17,000	17,000	8,512	17,000	17,000
010-2102-4216207	Operating Supplies / Body Armor	4,561	9,000	9,000	2,642	11,000	5,250
TOTAL	**POLICE DEPT - LAW ENFORCEMENT**	2,964,706	3,097,401	3,097,401	1,369,922	2,951,762	3,134,241

CITY OF BLACK HAWK
2015 BUDGET
GENERAL FUND

Account Number	Account Description	2013 Year-End Actual	2014 Adopted Budget	2014 Amended Budget	June 30, 2014 Year To Date Actual	2014 Year-End Estimate	2015 City Manager Request
POLICE DEPT - DISPATCH							
010-2105-4211201	Regular Salaries/Wages / Full-Time	333,135	348,977	348,977	154,524	348,977	353,534
010-2105-4211400	Police / Overtime	16,492	20,000	20,000	8,817	22,000	20,000
010-2105-4212100	Police / Group Health Insurance	71,451	78,508	78,508	42,742	78,508	79,265
010-2105-4212200	Police / Social Security	26,118	25,621	25,621	12,182	25,621	25,883
010-2105-4212301	Retirement / 401A	18,260	20,095	20,095	8,828	20,095	20,300
010-2105-4212500	Police / Unemployment Compensation	1,023	1,005	1,005	477	1,006	1,015
010-2105-4212600	Police / Workers Compensation	416	536	536	442	536	541
010-2105-4213322	Professional Services / Professional Services	34	100	100	0	0	0
010-2105-4214506	Repairs & Maintenance / Equipment Maintenance	4,557	6,000	6,000	1,140	6,000	16,000
010-2105-4215501	Dues, & Membership / Memberships	685	1,000	1,000	785	785	1,000
010-2105-4215805	Program Expenses / Training	318	2,500	2,500	3,257	3,500	2,500
010-2105-4216206	Operating Supplies / Uniforms	2,202	2,100	2,100	580	2,100	2,100
TOTAL	**POLICE DEPT - DISPATCH**	474,691	506,442	506,442	233,774	509,128	522,138

CITY OF BLACK HAWK
2015 BUDGET
GENERAL FUND

FIRE DEPARTMENT	2013 Year-End Actual	2014 Amended Budget	2014 Year-End Estimate	2015 Proposed Budget
STAFFING PLAN				
Fire Fighters	12.00	12.00	12.00	12.00
Fire Lieutenant	3.00	3.00	3.00	3.00
Fire Captain	3.00	3.00	3.00	3.00
Fire Chief	1.00	1.00	1.00	1.00
TOTAL STAFF	19.00	19.00	19.00	19.00
EXPENDITURES BY TYPE				
Personnel	2,180,543	2,207,530	2,207,530	2,307,187
Professional Services	8,139	7,500	7,500	17,500
General Services	101,299	124,000	143,595	92,000
Program Expenses	0	0	0	0
Supplies	57,455	99,250	92,000	92,500
Capital Outlay	15,127	65,500	62,000	46,500
Debt Service	0	0	0	0
Transfers	0	0	0	0
FIRE DEPARTMENT	2,362,564	2,503,780	2,512,625	2,555,687

CITY OF BLACK HAWK
2015 BUDGET
GENERAL FUND

Account Number	Account Description	2013 Year-End Actual	2014 Adopted Budget	2014 Amended Budget	June 30, 2014 Year To Date Actual	2014 Year-End Estimate	2015 City Manager Request
FIRE DEPARTMENT							
010-2201-4221201	Regular Salaries/Wages / Full-Time	1,596,849	1,595,103	1,595,103	734,274	1,595,103	1,678,643
010-2201-4221400	Fire / Overtime	89,996	90,000	90,000	42,431	90,000	90,000
010-2201-4222100	Fire / Group Health Insurance	296,671	301,840	301,840	164,151	301,840	306,320
010-2201-4222200	Fire / Social Security	24,027	22,961	22,961	11,066	22,961	24,173
010-2201-4222302	Retirement / Fppa	122,644	126,683	126,683	56,912	126,683	133,366
010-2201-4222500	Fire / Unemployment Compensation	4,962	4,751	4,751	2,285	4,751	5,001
010-2201-4222600	Fire / Workers Compensation	45,395	66,192	66,192	58,087	66,192	69,684
010-2201-4223319	Professional Services / Other (Consultants)	8,139	7,500	7,500	2,548	7,500	17,500
010-2201-4224506	Repairs & Maintenance / Station Equipment Mainten	1,067	2,000	2,000	207	1,000	2,000
010-2201-4224601	Buildings / Station Maintenance	1,778	24,000	24,000	1,363	36,000	5,000
010-2201-4224602	Buildings / Station Repairs	2,311	4,000	4,000	142	1,000	3,000
010-2201-4224603	Buildings / Station Supplies	2,496	1,500	1,500	696	1,500	1,500
010-2201-4224604	Buildings / Station Tools	399	500	500	132	300	500
010-2201-4224606	Buildings / Fire Station Equipment	3,731	8,000	8,000	1,500	20,000	3,000
010-2201-4224701	Vehicle Operation & Maint / Truck Maintenance	24,007	15,000	15,000	18,728	21,000	15,000
010-2201-4224703	Vehicle Operation & Maint / Truck Gas/Oil	13,692	10,000	10,000	3,876	8,000	8,000
010-2201-4224706	Vehicle Operation & Maint / Truck Tools	2,293	5,000	5,000	4,995	4,995	5,000
010-2201-4225058	Other Purchased Services / Travel & Training	20,142	20,000	20,000	12,115	19,000	25,000
010-2201-4225059	Other Purchased Services	831	1,500	1,500	1,090	1,500	1,500
010-2201-4225060	Health & Fitness Program	21,338	22,000	22,000	5,944	21,000	15,000
010-2201-4225301	Communications / Telephone	1,171	1,500	1,500	600	1,500	1,500
010-2201-4225501	Dues, & Membership / Memberships	767	3,000	3,000	1,155	1,800	2,000
010-2201-4225502	Dues, & Membership / Subscriptions	3,963	3,000	3,000	1,166	2,000	2,000
010-2201-4225810	Program Expenses / Fire Prevention Week	1,312	3,000	3,000	775	3,000	2,000
010-2201-4226101	General Supplies / Office	3,654	4,000	4,000	1,965	3,500	4,000
010-2201-4226102	General Supplies / Stationary/Forms	346	400	400	670	800	700
010-2201-4226107	General Supplies / Books	1,088	1,500	1,500	217	1,000	1,000
010-2201-4226110	General Supplies / Equipment	226	14,000	14,000	7,056	14,000	14,000
010-2201-4226206	Operating Supplies / Uniforms	13,317	12,000	12,000	58	12,000	12,000
010-2201-4226215	Operating Supplies / Medical Supplies	0	15,500	15,500	0	10,000	7,500
010-2201-4226216	Operating Supplies / Safety Gear	23,006	21,000	21,000	10,012	20,000	20,000
010-2201-4226217	Operating Supplies / Hazmat Materials	628	1,000	1,000	0	1,000	1,000
010-2201-4226218	Operating Supplies / Fire Extinguishers	0	100	100	0	0	100
010-2201-4226219	Operating Supplies / Personal Protective Equipment	12,792	17,000	17,000	14,237	17,000	20,000
010-2201-4226220	Operating Supplies / Linen	0	200	200	0	200	200
010-2201-4226221	Operating Supplies / Other Fire Supplies	2,398	8,550	8,550	8,336	8,500	8,000
010-2201-4226223	Emergency Management	0	50,000	50,000	8,532	50,000	35,000
010-2201-4226224	Operating Supplies / Hoses And Nozzles	7,515	8,000	8,000	0	5,000	5,000
010-2201-4226225	Honor Guard	0	4,000	4,000	913	4,000	4,000
010-2201-4227405	Machinery And Equipment / Radios/Radio Equipment	7,612	7,500	7,500	460	7,000	6,500
TOTAL	**FIRE DEPARTMENT**	2,362,564	2,503,780	2,503,780	1,178,695	2,512,625	2,555,687

12/4/2014

CITY OF BLACK HAWK
2015 BUDGET
GENERAL FUND

PUBLIC WORKS DEPARTMENT	2013 Year-End Actual	2014 Amended Budget	2014 Year-End Estimate	2015 Proposed Budget
STAFFING PLAN				
Administrative Assistant	1.00	1.00	1.00	1.00
Project Manager	1.00	1.00	1.00	1.00
Engineer Assoc / GIS Tech	1.00	1.00	1.00	1.00
Street Maintenance I	3.00	3.00	3.00	3.00
Street Maintenance II	3.00	3.00	3.00	3.00
Street Superintendent	1.00	1.00	1.00	1.00
Fleet Technician Aide	1.00	1.00	1.00	1.00
Fleet Inventory & Purchasing Assist	1.00	1.00	1.00	1.00
Fleet Technician I	2.00	2.00	2.00	2.00
Fleet Technician II	1.00	1.00	1.00	1.00
Fleet Superintendent	1.00	1.00	1.00	1.00
Facilities Maintenance Worker	2.00	2.00	2.00	2.00
Facilities Maintenance Superintendent	1.00	1.00	1.00	1.00
Public Works Director	1.00	1.00	1.00	1.00
TOTAL STAFF	20.00	20.00	20.00	20.00
EXPENDITURES BY TYPE				
Personnel	1,821,786	1,916,985	1,908,380	1,924,338
Professional Services	64,311	201,000	121,000	166,000
General Services	1,006,742	1,258,000	1,120,950	1,189,900
Program Expenses	368,063	410,000	410,000	450,000
Supplies	109,314	157,000	133,500	145,500
Capital Outlay	0	0	0	0
Debt Service	0	0	0	0
Transfers	0	0	0	0
PUBLIC WORKS DEPARTMENT	3,370,215	3,942,985	3,693,830	3,875,738

CITY OF BLACK HAWK
2015 BUDGET
GENERAL FUND

Account Number	Account Description	2013 Year-End Actual	2014 Adopted Budget	2014 Amended Budget	June 30, 2014 Year To Date Actual	2014 Year-End Estimate	2015 City Manager Request
PUBLIC WORKS - ADMINISTRATION							
010-3101-4311201	Regular Salaries/Wages / Full-Time	340,875	353,387	353,387	157,652	353,387	366,940
010-3101-4312100	Public Works / Group Health Insurance	51,966	52,123	52,123	27,027	52,123	53,640
010-3101-4312200	Public Works / Social Security	23,603	25,952	25,952	11,872	25,952	26,958
010-3101-4312301	Retirement / 401A	19,138	20,354	20,354	9,080	20,354	21,144
010-3101-4312500	Public Works / Unemployment Compensation	1,003	1,018	1,018	465	1,018	1,057
010-3101-4312600	Public Works / Workers Compensation	2,379	3,369	3,369	9,650	3,369	3,499
010-3101-4313304	Professional Services / Software/Hardware Support	(4,400)	20,000	20,000	1,340	5,000	10,000
010-3101-4313307	Professional Services / Surveys	3,009	25,000	25,000	0	10,000	15,000
010-3101-4313308	Professional Services / Engineering	4,522	40,000	40,000	1,055	10,000	40,000
010-3101-4313315	Professional Services / Signal Maint & Repair	18,653	55,000	55,000	4,738	55,000	40,000
010-3101-4313319	Professional Services / Other (Consultants)	17,649	20,000	20,000	0	10,000	10,000
010-3101-4313320	Professional Services / Environmental	75	0	0	0	0	10,000
010-3101-4314101	Utilities / Gas & Electric	341,174	286,000	286,000	143,587	350,000	375,000
010-3101-4314102	Utilities / Sewer	20,453	28,000	28,000	14,857	30,000	30,000
010-3101-4314103	Utilities / Trash Removal	38,538	45,000	45,000	14,245	40,000	45,000
010-3101-4314506	Repairs & Maintenance / Equipment Maintenance	0	3,000	3,000	0	3,000	3,000
010-3101-4315058	Other Purchased Services / Travel & Training	814	4,000	4,000	181	4,000	4,000
010-3101-4315200	Public Works / Printing And Binding	200	1,000	1,000	0	500	1,000
010-3101-4315403	Advertising / Publications	428	1,000	1,000	0	500	1,000
010-3101-4315501	Dues, & Membership / Memberships	1,262	4,500	4,500	962	2,000	2,000
010-3101-4315502	Dues, & Membership / Subscriptions	288	2,000	2,000	0	500	1,000
010-3101-4315826	Program Expenses / Banners	0	14,000	14,000	150	14,000	14,000
010-3101-4315830	Program Expenses / Christmas Decoration	138,928	145,000	145,000	24,296	145,000	0
010-3101-4315831	Program Expenses / Summer Flowers	20,071	45,000	45,000	21,784	30,000	0
010-3101-4316101	General Supplies / Office	6,759	7,000	7,000	7,840	10,000	9,000
010-3101-4316107	General Supplies / Books	0	1,000	1,000	309	1,000	1,000
010-3101-4316206	Operating Supplies / Uniforms	13,894	15,000	15,000	3,819	15,000	15,000
010-3101-4317403	Machinery And Equipment / Furniture And Fixtures	0	5,000	5,000	0	0	0
TOTAL	**PUBLIC WORKS - ADMINISTRATION**	1,061,280	1,222,703	1,222,703	454,909	1,191,703	1,099,238

CITY OF BLACK HAWK
2015 BUDGET
GENERAL FUND

Account Number	Account Description	2013 Year-End Actual	2014 Adopted Budget	2014 Amended Budget	June 30, 2014 Year To Date Actual	2014 Year-End Estimate	2015 City Manager Request
PUBLIC WORKS - STREETS							
010-3102-4311201	Regular Salaries/Wages / Full-Time	425,378	438,088	438,088	180,161	458,483	458,483
010-3102-4311203	Regular Salaries/Wages / Part Time Salaries	0	24,000	24,000	0	0	0
010-3102-4311400	Public Works / Overtime	23,452	25,000	25,000	12,301	25,000	25,000
010-3102-4312100	Public Works / Group Health Insurance	95,666	116,200	116,200	55,798	116,200	109,918
010-3102-4312200	Public Works / Social Security	33,496	33,763	33,763	14,251	33,763	33,555
010-3102-4312301	Retirement / 401A	23,037	26,481	26,481	10,042	26,481	26,318
010-3102-4312500	Public Works / Unemployment Compensation	1,310	1,324	1,324	558	1,324	1,316
010-3102-4312600	Public Works / Workers Compensation	10,910	14,174	14,174	11,063	14,174	14,085
010-3102-4314202	Cleaning Services / Snow Plowing	9,433	12,000	12,000	8,012	16,000	16,000
010-3102-4314304	Rental And Leases / Equipment & Tools	15,998	45,000	45,000	238	20,000	45,000
010-3102-4314402	Rentals / Equipment Rental	46	0	0	0	9,000	10,000
010-3102-4314511	Repairs & Maintenance / Streets	66,163	100,000	100,000	5,400	50,000	130,000
010-3102-4314513	Repairs & Maintenance / Stairs	3,200	2,000	2,000	0	500	500
010-3102-4314515	Repairs & Maintenance / Sweeping	1,515	14,000	14,000	1,122	3,000	3,000
010-3102-4314516	Repairs & Maintenance / Striping	21,152	25,000	25,000	505	3,000	20,000
010-3102-4314517	Repairs & Maintenance / Storm Drainage	125	10,000	10,000	587	2,000	8,000
010-3102-4314520	Repairs & Maintenance / Stroehle Square	1,899	12,000	12,000	48	3,000	4,000
010-3102-4314701	Vehicle Operation & Maint / Parts & Accessories	28,612	40,000	40,000	19,214	40,000	54,000
010-3102-4314703	Vehicle Operation & Maint / Gas And Oil	46,228	60,000	60,000	14,409	46,000	46,000
010-3102-4314710	Vehicle Operation & Maint / Shop Supplies	8,398	8,000	8,000	4,509	9,000	9,000
010-3102-4315058	Other Purchased Services / Travel & Training	394	7,000	7,000	419	7,000	7,000
010-3102-4315832	Weed Management	2,321	10,000	10,000	35	5,000	5,000
010-3102-4316201	Operating Supplies / Small Tools	3,143	4,500	4,500	774	3,000	3,000
010-3102-4316229	Operating Supplies / Sand	40,151	45,000	45,000	25,773	45,000	45,000
010-3102-4316230	Operating Supplies / Base	0	2,000	2,000	1,010	2,000	2,000
010-3102-4316232	Operating Supplies / Signs	6,167	12,000	12,000	4,783	12,000	12,000
010-3102-4316243	Operating Supplies / Paving Materials	7,073	12,000	12,000	1,272	8,000	10,000
010-3102-4316250	Operating Supplies / Landscaping	11,530	15,000	15,000	4,370	10,000	10,000
010-3102-4316251	Open Space	15	10,000	10,000	434	5,000	10,000
010-3102-4317420	Machinery And Equipment / Equipment	8,670	10,000	10,000	0	5,000	10,000
TOTAL	**PUBLIC WORKS - STREETS**	895,483	1,134,530	1,134,530	377,087	978,925	1,128,175

CITY OF BLACK HAWK
2015 BUDGET
GENERAL FUND

Account Number	Account Description	2013 Year-End Actual	2014 Adopted Budget	2014 Amended Budget	June 30, 2014 Year To Date Actual	2014 Year-End Estimate	2015 City Manager Request
PUBLIC WORKS - FLEET							
010-3103-4311201	Regular Salaries/Wages / Full-Time	389,485	391,336	391,336	176,776	391,336	403,139
010-3103-4311400	Public Works / Overtime	7,785	7,500	7,500	168	2,500	2,500
010-3103-4312100	Public Works / Group Health Insurance	67,201	75,766	75,766	34,775	75,766	65,683
010-3103-4312200	Public Works / Social Security	29,643	28,611	28,611	13,395	28,611	29,480
010-3103-4312301	Retirement / 401A	21,384	22,440	22,440	9,921	22,440	23,122
010-3103-4312500	Public Works / Unemployment Compensation	1,175	1,122	1,122	524	1,122	1,156
010-3103-4312600	Public Works / Workers Compensation	5,862	8,116	8,116	319	8,116	8,362
010-3103-4313304	Software/Hardware Support	5,084	6,000	6,000	2,223	6,000	6,000
010-3103-4313316	Wash Bay Maintenance	6,771	7,000	7,000	1,528	7,000	7,000
010-3103-4314507	Repairs & Maintenance / Maintain Fuel System	369	6,000	6,000	105	4,000	4,000
010-3103-4314508	Repairs & Maintenance / Maintain Tools	795	6,000	6,000	1,965	6,000	6,000
010-3103-4314701	Vehicle Operation & Maint / Parts & Accessories	4,402	7,000	7,000	3,620	7,000	7,000
010-3103-4314709	Vehicle Operation & Maint / Mechanic Shop Supplies	8,374	12,000	12,000	3,843	12,000	12,000
010-3103-4314712	Vehicle Operation & Maint / Gilpin Ambulance Repai	16,716	30,000	30,000	5,214	15,000	15,000
010-3103-4315058	Other Purchased Services / Travel & Training	2,583	6,000	6,000	957	6,000	6,000
010-3103-4316101	General Supplies / Office	4,012	3,500	3,500	1,521	3,500	3,500
010-3103-4316110	General Supplies / Small Tools & Equipment	5,752	10,000	10,000	1,134	8,000	8,000
TOTAL	**PUBLIC WORKS - FLEET**	577,394	628,391	628,391	257,991	604,391	607,942

CITY OF BLACK HAWK
2015 BUDGET
GENERAL FUND

Account Number	Account Description	2013 Year-End Actual	2014 Adopted Budget	2014 Amended Budget	June 30, 2014 Year To Date Actual	2014 Year-End Estimate	2015 City Manager Request
PUBLIC WORKS - FACILITIES							
010-3104-4311201	Regular Salaries/Wages / Full-Time	185,999	185,435	185,435	84,333	185,435	187,109
010-3104-4311400	Public Works / Overtime	608	2,000	2,000	0	2,000	2,000
010-3104-4312100	Public Works / Group Health Insurance	31,196	29,195	29,195	18,758	29,195	29,420
010-3104-4312200	Public Works / Social Security	14,262	13,276	13,276	6,434	13,276	13,374
010-3104-4312301	Retirement / 401A	10,009	10,412	10,412	4,572	10,412	10,490
010-3104-4312500	Public Works / Unemployment Compensation	558	521	521	252	521	524
010-3104-4312600	Public Works / Workers Compensation	4,405	6,022	6,022	5,059	6,022	6,066
010-3104-4314201	Cleaning Services / Custodial	17,078	20,000	20,000	7,361	19,000	25,000
010-3104-4314220	Cleaning Services / Commercial Bldg	350	5,000	5,000	0	0	5,000
010-3104-4314503	Repairs & Maintenance / Tools	20,986	15,000	15,000	1,265	2,500	7,500
010-3104-4314506	Repairs & Maintenance / Equipment Maintenance	0	3,000	3,000	0	1,000	3,000
010-3104-4314608	Sand/Salt Storage Shed	88	2,500	2,500	0	750	2,500
010-3104-4314609	Crooks Palace	989	0	0	508	3,700	3,700
010-3104-4314611	Buildings / Fire Department Bldg	5,432	5,000	5,000	781	5,500	6,000
010-3104-4314616	Buildings / Bus Barn	4,692	10,000	10,000	5,244	8,000	14,000
010-3104-4314617	Buildings /1020 Dory Hill	2,156	0	0	204	2,000	2,000
010-3104-4314618	Buildings / PW Facility	0	1,000	1,000	5,637	8,000	12,000
010-3104-4314619	Buildings / Post Office	637	4,000	4,000	445	2,000	3,000
010-3104-4314620	Buildings / Commercial Bldg	4,911	12,000	12,000	7,457	9,500	14,200
010-3104-4314701	Vehicle Operation & Maint / Parts & Accessories	2,222	5,000	5,000	812	4,000	5,000
010-3104-4314710	Shop Supplies	2,029	2,000	2,000	1,861	3,000	4,000
010-3104-4315058	Other Purchased Services / Travel & Training	0	3,000	3,000	0	3,000	3,000
010-3104-4316201	Operating Supplies / Small Tools	119	0	0	0		
TOTAL	**PUBLIC WORKS - FACILITIES**	308,727	334,361	334,361	150,982	318,811	358,883

CITY OF BLACK HAWK
2015 BUDGET
GENERAL FUND

Account Number	Account Description	2013 Year-End Actual	2014 Adopted Budget	2014 Amended Budget	June 30, 2014 Year To Date Actual	2014 Year-End Estimate	2015 City Manager Request
PUBLIC WORKS - TRANSPORTATION							
010-3105-4313319	Other (Consultants)	19,719	35,000	35,000	7,350	25,000	35,000
010-3105-4314101	Gas & Electric	16,752	25,000	25,000	8,954	25,000	47,500
010-3105-4314506	Equipment Maintenance	42,914	30,000	30,000	7,820	20,000	45,000
010-3105-4314518	Bus Stop Maintenance	750	15,000	15,000	0	15,000	18,000
010-3105-4314703	Gas And Oil	49,292	50,000	50,000	15,771	50,000	55,000
010-3105-4315403	Publications-Marketing	777	15,000	15,000	1,105	15,000	15,000
010-3105-4315501	Memberships	3,596	8,000	8,000	2,260	5,000	6,000
010-3105-4315810	Contracted Bus Service	368,063	410,000	410,000	158,448	410,000	450,000
010-3105-4315812	Next Bus Stop Contract	25,469	35,000	35,000	0	35,000	10,000
TOTAL	**PUBLIC WORKS - TRANSPORTATION**	527,332	623,000	623,000	201,707	600,000	681,500

CITY OF BLACK HAWK
2015 BUDGET
GENERAL FUND

Account Number	Account Description	2013 Year-End Actual	2014 Adopted Budget	2014 Amended Budget	June 30, 2014 Year To Date Actual	2014 Year-End Estimate	2015 City Manager Request
INTERGOVERNMENTAL TRANSFERS							
010-9500-4919504	Transfers Out / Water Fund	0	8,500,000	8,500,000	0	8,500,000	0
010-9500-4919505	Transfers Out / Debt Service Fund	2,354,523	4,141,156	4,141,156	1,361,751	4,393,397	2,904,744
010-9500-4919507	Transfers Out / Capital Projects-General	1,750,000	12,000,000	12,000,000	0	12,000,000	9,300,000
TOTAL	**INTERGOVERNMENTAL TRANSFERS**	4,104,523	24,641,156	24,641,156	1,361,751	24,893,397	12,204,744

CITY OF BLACK HAWK
2015 BUDGET
IMPACT FEES FUND SUMMARY

	2013 Year-End Actual	2014 Adopted Budget	2014 Amended Budget	June 30, 2014 Y-T-D Actual	2014 Year-End Estimate	2015 City Manager Budget
BEGINNING FUND BALANCE	1,739,207	1,492,759	1,492,759	1,492,759	1,492,759	1,494,759
REVENUES	3,552	4,000	4,000	789	2,000	241
EXPENDITURES	250,000	0	0	0	0	1,495,000
NET INCREASE (DECREASE)	(246,448)	4,000	4,000	789	2,000	(1,494,759)
ENDING FUND BALANCE	1,492,759	1,496,759	1,496,759	1,493,548	1,494,759	0

CITY OF BLACK HAWK
2015 BUDGET
IMPACT FEE FUND

Account Number	Account Description	2013 Year-End Actual	2014 Adopted Budget	2014 Amended Budget	June 30, 2014 Year To Date Actual	2014 Year-End Estimate	2015 City Manager Request
IMPACT FEE FUND							
201-0000-3610100	Revenue / Int Income On Investments	3,552	4,000	4,000	789	2,000	241
TOTAL	**IMPACT FEE FUND**	3,552	4,000	4,000	789	2,000	241

CITY OF BLACK HAWK
2015 BUDGET
IMPACT FEE FUND

Account Number	Account Description	2013 Year-End Actual	2014 Adopted Budget	2014 Amended Budget	June 30, 2014 Year To Date Actual	2014 Year-End Estimate	2015 City Manager Request
IMPACT FEE FUND							
201-0000-5017702	Reimbursement / Parking Impact Fee	250,000	0	0	0	0	1,495,000
TOTAL	**IMPACT FEE FUND**	250,000	0	0	0	0	1,495,000

CITY OF BLACK HAWK
2015 BUDGET
PRESERVATION & RESTORATION FUND SUMMARY

	2013 Year-End Actual	2014 Adopted Budget	2014 Amended Budget	June 30, 2014 Y-T-D Actual	2014 Year-End Estimate	2015 City Manager Budget
BEGINNING FUND BALANCE	6,197,842	4,220,082	4,220,082	4,220,082	4,220,082	4,612,647
REVENUES	3,684,702	3,549,064	3,549,064	38,309	3,655,443	3,410,000
EXPENDITURES	5,662,462	2,954,890	2,954,890	1,442,273	3,262,878	7,201,025
NET INCREASE (DECREASE)	(1,977,760)	594,174	594,174	(1,403,964)	392,565	(3,791,025)
ENDING FUND BALANCE	4,220,082	4,814,256	4,814,256	2,816,118	4,612,647	821,622

CITY OF BLACK HAWK
2015 BUDGET
PRESERVATION & RESTORATION FUND

Account Number	Account Description	2013 Year-End Actual	2014 Adopted Budget	2014 Amended Budget	June 30, 2014 Year To Date Actual	2014 Year-End Estimate	2015 City Manager Request
PRESERVATION & RESTORATION FUND							
203-0000-3350800	State Shared Revenues / Preservation	3,457,536	3,500,000	3,500,000	0	3,496,881	3,400,000
203-0000-3610100	Revenue / Int Income On Investments	10,789	13,000	13,000	2,246	10,000	10,000
203-0000-3611800	Revenue / Lace House Reloc Reimb	216,377	36,064	36,064	36,063	36,063	0
203-0000-3950300	Transfer In / Dory Hill Cemetery	0	0	0	0	112,499	0
TOTAL	**PRESERVATION & RESTORATION FUND**	3,684,702	3,549,064	3,549,064	38,309	3,655,443	3,410,000

CITY OF BLACK HAWK
2015 BUDGET
PRESERVATION & RESTORATION FUND

Account Number	Account Description	2013 Year-End Actual	2014 Adopted Budget	2014 Amended Budget	June 30, 2014 Year To Date Actual	2014 Year-End Estimate	2015 City Manager Request
PRESERVATION & RESTORATION FUND							
203-0000-5023301	Preservation/Temporary Employee	0	11,040	11,040	0	11,040	36,000
203-0000-5025800	Preservation/Program Expense (Consultants)	0	0	0	0	345,000	370,000
203-0000-5025801	Program Expense/Dory Hill Cemetery	0	0	0	0	0	10,000
203-0000-5025802	Program Expenses / Horn Street Stairs	0	350,000	350,000	7,235	20,000	0
203-0000-5025821	Program Expenses / Street Lights	82,071	120,000	120,000	0	60,000	156,000
203-0000-5025824	Program Expenses / Rock Walls	154,629	850,000	850,000	27,549	100,000	850,000
203-0000-5025835	Program Expenses / Capital/Grant Projects	1,076,867	302,000	302,000	113,584	320,000	0
203-0000-5025836	Program Expenses / Colorado Preservation, Inc Conf.	6,173	9,500	9,500	676	9,500	12,500
203-0000-5025838	Program Expenses / Underground Utilities	0	750,000	750,000	0	20,000	700,000
203-0000-5025840	Program Expenses / Police Building	131,067	10,000	10,000	395,235	420,000	100,000
203-0000-5025841	Program Expenses / City Hall Annex	1,926	10,000	10,000	1,362	5,000	0
203-0000-5025842	Program Expenses / City Hall Building	2,363	30,000	30,000	548	1,000	30,000
203-0000-5025843	Program Expenses / Mountain City	69,151	100,000	100,000	1,077	100,000	22,000
203-0000-5025846	Program Expenses / 221 Gregory-Lucky Star	0	6,000	6,000	285	2,000	2,000
203-0000-5025851	Program Expenses / Crooks Palace Rehab	489	2,000	2,000	631	0	0
203-0000-5025859	Program Expenses / Blm Acquisition	0	300,000	300,000	16,468	60,000	250,000
203-0000-5025861	Program Expenses / Refundable Tax Sb232 Grnt	802,867	39,150	39,150	447,359	722,238	582,525
203-0000-5025867	Program Expenses / Historic Pres Commission	17,233	18,200	18,200	1,957	18,200	23,000
203-0000-5026101	Office	651	0	0	0	0	0
203-0000-5026867	Program Expenses / Preservation Easement	3,316,976	47,000	47,000	428,307	1,048,900	1,457,000
203-0000-5029501	Transfers / General Fund	0	0	0	0	0	2,600,000
TOTAL	**PRESERVATION & RESTORATION FUND**	5,662,462	2,954,890	2,954,890	1,442,273	3,262,878	7,201,025

CITY OF BLACK HAWK
2015 BUDGET
TRANSPORTATION DEVICE FEE TRUST FUND SUMMARY

	2013 Year-End Actual	2014 Adopted Budget	2014 Amended Budget	June 30, 2014 Y-T-D Actual	2014 Year-End Estimate	2015 City Manager Budget
BEGINNING FUND BALANCE	55,263	59,369	59,369	59,369	59,369	59,819
REVENUES	647,106	651,100	651,100	157,868	651,100	654,950
EXPENDITURES	643,000	650,650	650,650	0	650,650	654,500
NET INCREASE (DECREASE)	4,106	450	450	157,868	450	450
ENDING FUND BALANCE	59,369	59,819	59,819	217,237	59,819	60,269

CITY OF BLACK HAWK
2015 BUDGET
TRANSPORTATION DEVICE FEE FUND

Account Number	Account Description	2013 Year-End Actual	2014 Adopted Budget	2014 Amended Budget	June 30, 2014 Year To Date Actual	2014 Year-End Estimate	2015 City Manager Request
TRANSPORTATION DEVICE FEE FUND							
204-0000-3180100	Other Taxes / Device Fees	646,520	650,650	650,650	157,820	650,650	654,500
204-0000-3610100	Revenue / Int Income On Investments	586	450	450	48	450	450
TOTAL	**TRANSPORTATION DEVICE FEE FUND**	647,106	651,100	651,100	157,868	651,100	654,950

CITY OF BLACK HAWK
2015 BUDGET
TRANSPORTATION DEVICE FEE FUND

Account Number	Account Description	2013 Year-End Actual	2014 Adopted Budget	2014 Amended Budget	June 30, 2014 Year To Date Actual	2014 Year-End Estimate	2015 City Manager Request
TRANSPORTATION DEVICE FEE FUND							
204-9500-4919500	Operating Trans Out / Transfers Out	643,000	650,650	650,650	0	650,650	654,500
TOTAL	**TRANSPORTATION DEVICE FEE FUND**	643,000	650,650	650,650	0	650,650	654,500

CITY OF BLACK HAWK
2015 BUDGET
CAPITAL PROJECTS FUND SUMMARY

	2013 Year-End Actual	2014 Adopted Budget	2014 Amended Budget	June 30, 2014 Y-T-D Actual	2014 Year-End Estimate	2015 City Manager Budget
BEGINNING FUND BALANCE	2,906,577	253,482	253,482	253,482	253,482	254,495
REVENUES	3,815,159	12,225,000	12,225,000	193	12,955,300	9,345,500
EXPENDITURES	6,468,254	11,946,040	11,946,040	1,261,586	12,954,287	9,490,000
NET INCREASE (DECREASE)	(2,653,095)	278,960	278,960	(1,261,393)	1,013	(144,500)
ENDING FUND BALANCE	253,482	532,442	532,442	(1,007,911)	254,495	109,995

CITY OF BLACK HAWK
2015 BUDGET
CAPITAL PROJECTS FUND

Account Number	Account Description	2013 Year-End Actual	2014 Adopted Budget	2014 Amended Budget	June 30, 2014 Year To Date Actual	2014 Year-End Estimate	2015 City Manager Request
CAPITAL PROJECTS FUND							
305-0000-3610100	Revenue / Int Income On Investments	3,928	5,000	5,000	193	800	500
305-0000-3610400	Revenue / Grants	1,229,231	220,000	220,000	0	220,000	45,000
305-0000-3610900	Revenue / Other	832,000	0	0	0	734,500	0
305-0000-3950100	Transfer In / General Fund	1,750,000	12,000,000	12,000,000	0	12,000,000	9,300,000
TOTAL	**CAPITAL PROJECTS FUND**	3,815,159	12,225,000	12,225,000	193	12,955,300	9,345,500

CITY OF BLACK HAWK
2015 BUDGET
CAPITAL PROJECTS FUND

Account Number	Account Description	2013 Year-End Actual	2014 Adopted Budget	2014 Amended Budget	June 30, 2014 Year To Date Actual	2014 Year-End Estimate	2015 City Manager Request
CAPITAL PROJECTS FUND							
305-3101-4317102	Land / Purchase	1,839,839	1,000,000	1,000,000	810,412	2,252,021	0
305-3101-4317505	Construction In Progress / Maintenance Facility	2,475,961	0	0	74,958	95,000	100,000
305-3101-4317506	Police Parking Structure	0	1,500,000	1,500,000	0	1,500,000	0
305-3101-4317512	Construction In Progress/Gregory Comm. Building	0	0	0	0	0	6,300,000
305-3101-4317513	Construction In Progress/Gregory St Parking Structure	0	0	0	0	0	2,805,000
305-3101-4317514	Construction In Progress/Gregory St Redevelopment	76,002	7,000,000	7,000,000	196,796	8,400,000	0
305-3101-4317515	Maryland Mountain Improvements	0	1,000,000	1,000,000	9,368	30,000	0
305-3101-4317518	Construction In Progress /Variable Message Board	17,055	18,000	18,000	0	18,000	0
305-3101-4317522	Construction In Progress / IT Building	1,540	175,000	175,000	0	0	0
305-3101-4317523	Construction In Progress / Crooks	4,788	0	0	0	0	0
305-3101-4317533	Construction In Progress / Gregory St Parking Garage	18,265	0	0	0	0	0
305-3101-4317541	Patrol Vehicles	72,468	0	0	0	0	0
305-3101-4317542	Radio Tower Grant Match	757,238	0	0	0	0	0
305-3101-4317543	Fire Command Vehicle	42,838	0	0	0	0	0
305-3101-4317544	Fire Truck	105,455	150,000	150,000	0	0	0
305-3101-4317545	Main Street Resurfacing	100,000	0	0	0	0	0
305-3101-4317546	Street Overlay Project	200,000	250,000	250,000	0	0	175,000
305-3101-4317547	Bridge Maintenance	51,334	100,000	100,000	0	0	50,000
305-3101-4317548	Street Sweeper	0	265,000	265,000	0	220,000	0
305-3101-4317549	Work Truck - Facilities	69,821	30,000	30,000	26,268	26,268	0
305-3101-4317549	Plow Truck - Streets	0	70,000	70,000	0	70,000	0
305-3101-4317550	Live Fingerprint Scanner	0	19,000	19,000	0	19,000	0
305-3101-4317550	MDT Tablets for PD Vehicles	0	15,000	15,000	0	15,000	0
305-3101-4317550	Dictation Software	0	13,040	13,040	12,246	12,246	0
305-3101-4317550	Mobile Computer Dispatching	0	26,000	26,000	25,015	25,015	0
305-3101-4317550	Paperless Records (PD)	0	35,000	35,000	31,710	31,710	0
305-3101-4317552	Bus	635,650	280,000	280,000	74,814	240,027	0
305-1501-4157404	Document Management System	0	0	0	0	0	60,000
TOTAL	**CAPITAL PROJECTS FUND**	6,468,254	11,946,040	11,946,040	1,261,586	12,954,287	9,490,000

CITY OF BLACK HAWK
2015 BUDGET
DEBT SERVICE FUND SUMMARY

	2013 Year-End Actual	2014 Adopted Budget	2014 Amended Budget	June 30, 2014 Y-T-D Actual	2014 Year-End Estimate	2015 City Manager Budget
BEGINNING FUND BALANCE	963,890	1,629,639	1,629,639	1,629,639	1,629,639	2,664,162
REVENUES	2,354,716	4,141,356	4,141,356	1,361,792	4,393,597	2,904,944
EXPENDITURES	1,688,967	3,347,533	3,347,533	886,720	3,359,074	2,962,677
NET INCREASE (DECREASE)	665,749	793,823	793,823	475,072	1,034,523	(57,733)
ENDING FUND BALANCE	1,629,639	2,423,462	2,423,462	2,104,712	2,664,162	2,606,429

CITY OF BLACK HAWK
2015 BUDGET
DEBT SERVICE FUND

Account Number	Account Description	2013 Year-End Actual	2014 Adopted Budget	2014 Amended Budget	June 30, 2014 Year To Date Actual	2014 Year-End Estimate	2015 City Manager Request
DEBT SERVICE FUND							
401-0000-3610100	Revenue / Int Income On Investments	193	200	200	41	200	200
401-0000-3950100	Transfer In / General Fund	2,354,523	4,141,156	4,141,156	1,361,751	4,393,397	2,904,744
TOTAL	**DEBT SERVICE FUND**	2,354,716	4,141,356	4,141,356	1,361,792	4,393,597	2,904,944

CITY OF BLACK HAWK
2015 BUDGET
DEBT SERVICE FUND

Account Number	Account Description	2013 Year-End Actual	2014 Adopted Budget	2014 Amended Budget	June 30, 2014 Year To Date Actual	2014 Year-End Estimate	2015 City Manager Request
DEBT SERVICE FUND							
401-0000-4718108	Bond Principal / 2004 Bond Principal	145,000	135,000	135,000	0	135,000	0
401-0000-4718109	Bond Principal / 2006A Bond Principal	845,000	885,000	885,000	0	885,000	935,000
401-0000-4718112	2013 Bond Principal	0	770,000	770,000	0	0	0
401-0000-4718113	2014A Bond Principal	0	0	0	0	0	0
401-0000-4718114	2014B Bond Principal	0	0	0	0	750,000	750,000
401-0000-4718208	Bond Interest / 2004 Bond Interest	12,663	6,210	6,210	3,105	6,210	0
401-0000-4718209	Bond Interest / 2006A Bond Interest	467,750	425,500	425,500	212,750	425,500	381,250
401-0000-4718212	2013 Bond Interest	0	857,460	857,460	188,808	397,308	417,000
401-0000-4718213	2014A Bond Interest	0	0	0	166,850	378,350	423,000
401-0000-4718214	2014B Bond Interest	0	0	0	52,461	118,961	56,427
401-0000-4718301	Other Bond Costs / Cost Of Issuance	218,554	268,363	268,363	262,745	262,745	0
TOTAL	**DEBT SERVICE FUND**	1,688,967	3,347,533	3,347,533	886,720	3,359,074	2,962,677

	2004 Device Tax Revenue Refunding Bonds ('94-$1,500,000 Fire Station) ('94-$500,000 Phase 2 Water Eval)				2006 Device Tax Revenue Refunding Bonds - Series A ('97-$3,445,000 Bobtail St) ('98-$13,200,000 Hidden Valley)				2013 Device Tax Revenue Dory Hill Plant & Water Rights Gregory Street Realignment				2014A Device Tax Revenue Dory Hill Plant & Water Rights Gregory Street Realignment				2014B Device Tax Revenue Dory Hill Plant & Water Rights Gregory Street Realignment				
Year	**Principal**	**Rate**	**Interest**	**Total**	**Principal**	**Rate**	**Interest**	**Total**	**Principal**	**Rate**	**Interest**	**Total**	**Principal**	**Rate**	**Interest**	**Total**	**Principal**	**Rate**	**Interest**	**Total**	**TOTAL**
2013	$145,000	4.450%	$12,663	$157,663	$845,000	5.000%	$467,750	$1,312,750													$1,470,413
2014	$135,000	4.600%	$6,210	$141,210	$885,000	5.000%	$425,500	$1,310,500	$0	4.170%	$397,308	$397,308	$0	4.230%	$378,350	$378,350	$750,000	6.650%	$118,961	$868,961	$3,096,329
2015					$935,000	5.000%	$381,250	$1,316,250	$0	4.170%	$417,000	$417,000	$0	4.230%	$423,000	$423,000	$750,000	6.650%	$56,427	$806,427	$2,962,677
2016					$980,000	5.000%	$334,500	$1,314,500	$135,000	4.170%	$417,000	$552,000	$150,000	4.230%	$423,000	$573,000	$500,000	6.650%	$21,600	$521,600	$2,961,100
2017					$1,035,000	5.000%	$285,500	$1,320,500	$410,000	4.170%	$411,371	$821,371	$410,000	4.230%	$416,655	$826,655					$2,968,526
2018					$1,085,000	5.000%	$233,750	$1,318,750	$430,000	4.170%	$394,273	$824,273	$420,000	4.230%	$399,312	$819,312					$2,962,335
2019					$1,140,000	5.000%	$179,500	$1,319,500	$445,000	4.170%	$376,343	$821,343	$445,000	4.230%	$381,546	$826,546					$2,967,389
2020					$1,195,000	5.000%	$122,500	$1,317,500	$465,000	4.170%	$357,786	$822,786	$460,000	4.230%	$362,723	$822,723					$2,963,009
2021					$1,255,000	5.000%	$62,750	$1,317,750	$485,000	4.170%	$338,395	$823,395	$480,000	4.230%	$343,265	$823,265					$2,964,410
2022									$505,000	4.170%	$318,171	$823,171	$500,000	4.230%	$322,961	$822,961					$1,646,132
2023-33									$7,125,000	4.170%	$1,903,397	$9,028,397	$7,135,000	4.230%	$1,936,282	$9,071,282					$18,099,679
	$280,000		$18,873	$298,873	$9,355,000		$2,493,000	$11,848,000	$10,000,000		$5,331,044	$15,331,044	$10,000,000		$5,387,093	$15,387,093	$2,000,000		$196,988	$2,196,988	$45,061,998

CITY OF BLACK HAWK
2015 BUDGET
WATER FUND SUMMARY

	2013 Year-End Actual	2014 Adopted Budget	2014 Amended Budget	June 30, 2014 Y-T-D Actual	2014 Year-End Estimate	2015 City Manager Budget
BEGINNING WORKING CAPITAL	653,765	387,613	387,613	387,613	387,613	2,378,740
REVENUES	3,001,433	11,417,700	11,417,700	1,220,538	11,428,000	2,902,500
ADMINISTRATION	1,590,816	1,969,707	1,969,707	918,034	1,740,707	1,870,625
OPERATIONS	1,676,769	8,470,565	8,470,565	542,715	7,696,166	3,062,582
EXPENDITURES	3,267,585	10,440,272	10,440,272	1,460,749	9,436,873	4,933,207
NET INCREASE (DECREASE)	(266,152)	977,428	977,428	(240,211)	1,991,127	(2,030,707)
ENDING WORKING CAPITAL	387,613	1,365,041	1,365,041	147,402	2,378,740	348,033

CITY OF BLACK HAWK
2015 BUDGET
WATER FUND

Account Number	Account Description	2013 Year-End Actual	2014 Adopted Budget	2014 Amended Budget	June 30, 2014 Year To Date Actual	2014 Year-End Estimate	2015 City Manager Request
WATER FUND							
501-0000-3410500	Miscellaneous Fees / System Development Fees	133,168	0	0	0	0	0
501-0000-3430100	User Fees / Water Billed	2,850,244	2,900,000	2,900,000	1,144,204	2,850,000	2,900,000
501-0000-3430200	User Fees / Bulk Water Sales	954	200	200	480	1,000	500
501-0000-3610100	Revenue / Int Income On Investments	1,448	2,000	2,000	154	1,000	1,000
501-0000-3610300	Revenue / Interest/Penalties	3,200	3,000	3,000	700	1,000	1,000
501-0000-3630300	Rents / Water Leases	12,419	12,500	12,500	0	0	0
501-0000-3660100	Gain/Loss / Sale Of Fixed Assets	0	0	0	75,000	75,000	0
501-0000-3950100	Transfer In / General Fund	0	8,500,000	8,500,000	0	8,500,000	0
TOTAL	**WATER FUND**	3,001,433	11,417,700	11,417,700	1,220,538	11,428,000	2,902,500

CITY OF BLACK HAWK
2015 BUDGET
WATER FUND

WATER FUND	2013 Year-End Actual	2014 Amended Budget	2014 Year-End Estimate	2015 Proposed Budget
STAFFING PLAN				
Water System Coordinator	1.00	1.00	1.00	1.00
Utility Operator I	3.00	2.00	2.00	2.00
Utility Operator II	3.00	3.00	3.00	3.00
Utility Operator III	1.00	1.00	1.00	1.00
Utility Operator IV	1.00	1.00	1.00	1.00
Water Superintendent	1.00	1.00	1.00	1.00
TOTAL STAFF	10.00	9.00	9.00	9.00
EXPENDITURES BY TYPE				
Personnel	772,611	852,072	764,673	814,207
Professional Services	1,145,828	1,300,000	1,235,000	1,255,000
General Services	558,060	1,001,500	676,000	909,500
Program Expenses	0	0	0	0
Supplies	51,113	83,700	53,200	76,500
Capital Outlay	739,972	7,203,000	6,708,000	1,878,000
Debt Service	0	0	0	0
Transfers	0	0	0	0
WATER FUND	3,267,585	10,440,272	9,436,873	4,933,207

CITY OF BLACK HAWK
2015 BUDGET
WATER FUND

Account Number	Account Description	2013 Year-End Actual	2014 Adopted Budget	2014 Amended Budget	June 30, 2014 Year To Date Actual	2014 Year-End Estimate	2015 City Manager Request
WATER - ADMINISTRATION							
501-3150-4601201	Regular Salaries/Wages / Full-Time	107,369	111,562	111,562	50,158	111,562	117,562
501-3150-4602100	Water / Group Health Insurance	31,984	14,915	14,915	16,330	14,915	15,478
501-3150-4602200	Water / Social Security	8,091	7,974	7,974	3,821	7,974	8,408
501-3150-4602301	Retirement / 401A	6,072	6,255	6,255	2,812	6,255	6,594
501-3150-4602500	Water / Unemployment Compensation	345	313	313	149	313	330
501-3150-4602600	Water / Workers Compensation	829	1,188	1,188	1,080	1,188	1,253
501-3150-4603304	Professional Services / Software/Hardware Support	18,751	40,000	40,000	36,233	50,000	50,000
501-3150-4603308	Professional Services / Engineering	795	75,000	75,000	0	10,000	20,000
501-3150-4603310	Professional Services / Water Testing	13,848	35,000	35,000	10,913	25,000	35,000
501-3150-4603311	Professional Services / Water Rights/Legal	447,762	475,000	475,000	298,806	475,000	475,000
501-3150-4603321	Professional Services/Water Right-Engineering/Acct	664,672	675,000	675,000	360,124	675,000	675,000
501-3150-4604101	Utilities / Gas & Electric	179,485	250,000	250,000	85,258	200,000	220,000
501-3150-4604102	Utilities / Sewer	384	15,000	15,000	192	1,000	10,000
501-3150-4604103	Utilities / Wtr Leases Coors/Consolid	29,615	65,000	65,000	19,147	45,000	65,000
501-3150-4604104	Utilities / Monitoring/Usgs	10,480	30,000	30,000	2,083	20,000	30,000
501-3150-4604506	Repairs & Maintenance / Equipment Maintenance	34,998	50,000	50,000	9,455	35,000	40,000
501-3150-4604515	Repairs & Maintenance / Security System Maint	3,477	40,000	40,000	1,889	5,000	40,000
501-3150-4605058	Other Purchased Services / Travel & Training	2,029	10,000	10,000	2,325	9,000	10,000
501-3150-4605101	Insurance / Liability	8,987	20,000	20,000	9,013	10,000	10,000
501-3150-4605200	Water / Printing And Binding	670	1,500	1,500	599	800	1,000
501-3150-4605301	Communications / Telephone	1,185	1,000	1,000	600	1,200	1,500
501-3150-4605501	Dues, & Membership / Memberships	6,393	16,000	16,000	4,922	10,000	10,000
501-3150-4605502	Dues, & Membership / Subscriptions	174	500	500	151	500	500
501-3150-4606101	General Supplies / Office	9,458	7,000	7,000	1,974	5,000	7,000
501-3150-4606107	General Supplies / Books	121	1,000	1,000	0	500	500
501-3150-4606110	General Supplies / Small Equipment	288	2,500	2,500	0	2,500	2,500
501-3150-4607401	System Improvements / Machinery & Equipment	1,755	6,000	6,000	0	6,000	6,000
501-3150-4607403	System Improvements / Furniture And Fixtures	0	2,000	2,000	0	2,000	2,000
501-3150-4607404	System Improvements / Computers And Software	800	10,000	10,000	0	10,000	10,000
TOTAL	**WATER - ADMINISTRATION**	1,590,816	1,969,707	1,969,707	918,034	1,740,707	1,870,625

CITY OF BLACK HAWK
2015 BUDGET
WATER FUND

Account Number	Account Description	2013 Year-End Actual	2014 Adopted Budget	2014 Amended Budget	June 30, 2014 Year To Date Actual	2014 Year-End Estimate	2015 City Manager Request
WATER - OPERATIONS							
501-3151-4601201	Regular Salaries/Wages / Full-Time	448,026	490,040	490,040	208,887	445,875	474,538
501-3151-4601400	Water / Overtime	35,969	32,000	32,000	6,511	15,000	15,000
501-3151-4602100	Water / Group Health Insurance	62,809	109,621	109,621	43,383	90,275	99,480
501-3151-4602200	Water / Social Security	36,675	35,781	35,781	16,316	32,629	34,573
501-3151-4602301	Retirement / 401A	24,392	28,064	28,064	11,686	25,592	27,116
501-3151-4602500	Water / Unemployment Compensation	1,446	1,403	1,403	639	1,280	1,356
501-3151-4602600	Water / Workers Compensation	8,605	12,956	12,956	8,671	11,815	12,519
501-3151-4604501	Repairs & Maintenance / Spring Line	0	30,000	30,000	0	5,000	5,000
501-3151-4604502	Repairs & Maintenance / Pump Station	38,966	50,000	50,000	11,456	30,000	50,000
501-3151-4604503	Repairs & Maintenance / Tools	1,090	5,000	5,000	1,230	5,000	12,000
501-3151-4604504	Repairs & Maintenance / Plant	170,507	200,000	200,000	41,662	150,000	200,000
501-3151-4604505	Repairs & Maintenance / Distribution	37,494	150,000	150,000	28,133	100,000	150,000
501-3151-4604701	Vehicle Operation & Maint / Vehicle Maintenance	5,241	18,000	18,000	1,363	5,000	8,000
501-3151-4604703	Vehicle Operation & Maint / Gas And Oil	10,322	18,000	18,000	3,797	12,000	15,000
501-3151-4604705	Vehicle Operation & Maint / Small Equip Rental	381	1,500	1,500	0	1,500	1,500
501-3151-4604800	Water / Green Lake Operations	9,933	15,000	15,000	(5,428)	15,000	15,000
501-3151-4604900	Water / Georgetown Lake Operation	6,249	15,000	15,000	0	15,000	15,000
501-3151-4606206	Operating Supplies / Uniforms	4,604	5,200	5,200	1,948	5,200	6,500
501-3151-4606239	Operating Supplies / Chemicals	36,643	58,000	58,000	5,317	30,000	50,000
501-3151-4606246	Operating Supplies / Sludge Disposal	0	10,000	10,000	0	10,000	10,000
501-3151-4607102	System Improvements / Land Acquisition	0	0	0	0	0	50,000
501-3151-4607402	System Improvements / Vehicles	45,624	15,000	15,000	3,412	5,000	0
501-3151-4607411	System Improvements / Water Tank	0	70,000	70,000	0	0	80,000
501-3151-4607413	System Improvements / Dory Hill Plant	368,401	0	0	7,416	15,000	50,000
501-3151-4607415	System Improvements / Georgetown Outlet	91,335	700,000	700,000	35,026	400,000	250,000
501-3151-4607417	System Improvements / HV Infiltration	12,519	0	0	0	0	0
501-3151-4607418	System Improvements / EIS & EA	118,624	200,000	200,000	27,757	90,000	200,000
501-3151-4607422	System Improvements / Water Capital Projects	5,057	1,600,000	1,600,000	17,731	1,200,000	1,050,000
501-3151-4607427	System Improvements / System Expansion	48,077	4,500,000	4,500,000	65,801	4,900,000	0
501-3151-4607429	Green Lake Pipeline	47,780	100,000	100,000	0	80,000	180,000
TOTAL	**WATER - OPERATIONS**	1,676,769	8,470,565	8,470,565	542,715	7,696,166	3,062,582

CITY OF BLACK HAWK
2015 BUDGET
DORY HILL CEMETERY FUND SUMMARY

	2013 Year-End Actual	2014 Adopted Budget	2014 Amended Budget	June 30, 2014 Y-T-D Actual	2014 Year-End Estimate	2015 City Manager Budget
BEGINNING FUND BALANCE	118,459	112,159	112,159	112,159	112,159	0
REVENUES	500	400	400	59	340	0
EXPENDITURES	6,800	10,000	10,000	0	112,499	0
NET INCREASE (DECREASE)	(6,300)	(9,600)	(9,600)	59	(112,159)	0
ENDING FUND BALANCE	112,159	102,559	102,559	112,218	0	0

CITY OF BLACK HAWK
2015 BUDGET
CEMETERY FUND

Account Number	Account Description	2013 Year-End Actual	2014 Adopted Budget	2014 Amended Budget	June 30, 2014 Year To Date Actual	2014 Year-End Estimate	2015 City Manager Request
CEMETERY FUND							
702-0000-3610100	Revenue / Int Income On Investments	250	300	300	59	240	0
702-0000-3611000	Revenue / Sale Of Plots	250	100	100	0	100	0
TOTAL	**CEMETERY FUND**	500	400	400	59	340	0

CITY OF BLACK HAWK
2015 BUDGET
DORY HILL CEMETERY

Account Number	Account Description	2013 Year-End Actual	2014 Adopted Budget	2014 Amended Budget	June 30, 2014 Year To Date Actual	2014 Year-End Estimate	2015 City Manager Request
DORY HILL CEMETERY							
702-0000-5037400	Cemetery / Plot Maintenance	6,800	10,000	10,000	0	0	0
702-0000-4919508	Transfer to Preservation / Rest. Fund	0	0	0	0	112,499	0
TOTAL	**DORY HILL CEMETERY**	6,800	10,000	10,000	0	112,499	0

CITY OF BLACK HAWK
2015 BUDGET
CONSERVATION TRUST FUND SUMMARY

	2013 Year-End Actual	2014 Adopted Budget	2014 Amended Budget	June 30, 2014 Y-T-D Actual	2014 Year-End Estimate	2015 City Manager Budget
BEGINNING FUND BALANCE	21,875	23,200	23,200	23,200	23,200	24,450
REVENUES	1,325	1,260	1,260	327	1,250	1,250
EXPENDITURES	0	0	0	0	0	0
NET INCREASE (DECREASE)	1,325	1,260	1,260	327	1,250	1,250
ENDING FUND BALANCE	23,200	24,460	24,460	23,527	24,450	25,700

CITY OF BLACK HAWK
2015 BUDGET
CONSERVATION TRUST FUND

Account Number	Account Description	2013 Year-End Actual	2014 Adopted Budget	2014 Amended Budget	June 30, 2014 Year To Date Actual	2014 Year-End Estimate	2015 City Manager Request
CONSERVATION TRUST FUND							
703-0000-3350700	State Shared Revenues / Lottery Proceeds	1,276	1,200	1,200	315	1,200	1,200
703-0000-3610100	Revenue / Int Income On Investments	49	60	60	12	50	50
TOTAL	**CONSERVATION TRUST FUND**	1,325	1,260	1,260	327	1,250	1,250

CITY OF BLACK HAWK
2015 BUDGET
CONSERVATION TRUST FUND

Account Number	Account Description	2013 Year-End Actual	2014 Adopted Budget	2014 Amended Budget	June 30, 2014 Year To Date Actual	2014 Year-End Estimate	2015 City Manager Request
CONSERVATION TRUST FUND							
703-0000-4500100	Park Improvements	0	0	0	0	0	0
TOTAL	**CONSERVATION TRUST FUND**	0	0	0	0	0	0

COUNCIL BILL 26

ORDINANCE 2014-26

AN ORDINANCE LEVYING GENERAL PROPERTY TAXES FOR THE YEAR 2014 TO HELP DEFRAY THE COSTS OF GOVERNMENT FOR THE CITY OF BLACK HAWK, COLORADO FOR THE 2015 BUDGET YEAR

STATE OF COLORADO
COUNTY OF GILPIN
CITY OF BLACK HAWK

COUNCIL BILL: 26

ORDINANCE NUMBER: 2014-26

TITLE: AN ORDINANCE LEVYING GENERAL PROPERTY TAXES FOR THE YEAR 2014 TO HELP DEFRAY THE COSTS OF GOVERNMENT FOR THE CITY OF BLACK HAWK, COLORADO FOR THE 2015 BUDGET YEAR.

WHEREAS, the Board of Aldermen of the City of Black Hawk has adopted the annual budget in accordance with the Local Government Budget Law on December 10, 2014:

WHEREAS, the amount of money necessary to balance the budget for general operating purposes from property tax revenue is $8,499; and

WHEREAS, the 2014 valuation for assessment for the City of Black Hawk, as certified by the Gilpin County Assessor, is $217,921,025.

BE IT ORDAINED BY THE CITY COUNCIL OF THE CITY OF BLACK HAWK, GILPIN COUNTY THAT:

Section 1. For the purpose of meeting all general operating expenses of the City of Black Hawk during the 2015 budget year, there is levied a tax of .039 mills upon each dollar of the total valuation for assessment of all taxable property within the City of Black Hawk for the year 2014.

Section 2. That the City Clerk is hereby authorized and directed to immediately certify to the County Commissioners of the County of Gilpin, Colorado the mill levy for the City of Black Hawk, Colorado as herein above determined and set.

Section 3. Safety Clause. The Board of Aldermen hereby finds, determines, and declares that this Ordinance is promulgated under the general police power of the City of Black Hawk, that it is promulgated for the health, safety, and welfare of the public, and that this Ordinance is necessary for the preservation of health and safety and for the protection of public convenience and welfare. The Board of Aldermen further determines that the Ordinance bears a rational relation to the proper legislative object sought to be attained.

Section 4. Severability If any clause, sentence, paragraph, or part of this Ordinance or the application thereof to any person or circumstances shall for any reason

be adjudged by a court of competent jurisdiction invalid, such judgment shall not affect application to other persons or circumstances.

Section 5. Effective Date. The City Clerk is directed to post this Ordinance as required by City Charter. This Ordinance shall become effective upon posting by the City Clerk.

READ, PASSED AND ORDERED POSTED this 10th day of December, 2014.

_____
David D. Spellman, Mayor

ATTEST:

_____
Melissa Greiner, City Clerk

RESOLUTION 93-2014

A RESOLUTION APPROVING A CERTIFICATE OF APPROPRIATENESS FOR THE EXTERIOR REHABILITATION AND SITE WORK FOR THE PROPERTY LOCATED AT 301 HIGH STREET

STATE OF COLORADO
COUNTY OF GILPIN
CITY OF BLACK HAWK

Resolution No. 93-2014

TITLE: A RESOLUTION APPROVING A CERTIFICATE OF APPROPRIATENESS FOR THE EXTERIOR REHABILITATION AND SITE WORK FOR THE PROPERTY LOCATED AT 301 HIGH STREET

NOW, THEREFORE, BE IT RESOLVED BY THE BOARD OF ALDERMEN OF THE CITY OF BLACK HAWK, COLORADO, THAT:

Section 1. The City Council hereby determines to approve a Certificate of Appropriateness for the exterior rehabilitation and site work for the property located at 301 High Street.

RESOLVED AND PASSED this 10th day of December, 2014.

_____
David D. Spellman, Mayor

ATTEST:

_____
Melissa Greiner, City Clerk

CITY OF BLACK HAWK
REQUEST FOR COUNCIL ACTION

CITY COUNCIL MEETING: December 10, 2014

SUBJECT:
Certificate of Appropriateness for Full Exterior Rehabilitation and Site Improvements for 301 High Street
The applicants, Lloyd and Christina Larsen, are requesting approval of a Certificate of Appropriateness (COA) for full exterior rehabilitation of the historic dwelling and site improvements for the property at 301 High Street.

CONSULTANT COMMENTS
The exterior rehabilitation and site work described on page 3 of this report requires a Certificate of Appropriateness. The consultant's evaluation of the proposal finds that some elements of the proposed work are not in accordance with the City of Black Hawk Residential Design Guidelines and the U.S. Secretary of the Interior's Standards for Rehabilitation. These include:

- Enlargement of one of the primary door openings and transom (a character-defining feature).
- Replacement of all historic doors instead of rehabilitating the doors.
- Replacement of all historic windows with metal-clad windows without investigation of window condition.
- Replacement of all siding and fish-scale shingles although investigation shows the condition ranges from good to excellent.
- Construction of a new porch railing without sufficient evidence that the design existed during the NHL district's period of significance; construction of a higher porch railing than that found historically.
- Removal of historic woven wire fencing along the south property line and replacing it with an ornate design in wrought iron not found historically.

HISTORIC PRESERVATION COMMISSION RECOMMENDATION
The Historic Preservation Commission (HPC) evaluated the application, the comments in the report, and testimony by staff, consultants and the applicant. The list of non-conforming elements in the previous section served as a starting guide for the Commission's discussion. Following is the result of that discussion:

- Enlargement of one of the primary door openings and transom (a character-defining feature).
  Door No. 3 is the proposed location for the enlargement. It was the opinion of the Commission this would be the most logical location from a practical standpoint of moving furniture and the fact it was not easily visible from the public right-of-way.
- Replacement of all historic doors instead of rehabilitating the doors.

This has been a rental property for many years and the doors have been abused. The Commission asked the applicant if their preference was to keep and restore or replace. The applicant felt the doors needed to be replaced and have chosen a style commonly seen throughout the District.

- Replacement of all historic windows with metal-clad windows without investigation of window conditions.
  Although the windows were not available for close inspection, due to the visible historic hardware, they were estimated to be "historic and/or original to the construction or early modification of the building." It is the applicant's desire and preference that all historic windows be replaced with double-hung, aluminum clad wood windows with clear glazing. Since the appearance of the replacement windows will simulate the original style the Commission agreed to replace. The only exception is the window on the west elevation. It is the applicant's preference to retain. It was originally designed to eliminate the window at the west elevation on the exterior and encapsulate on the interior. There would be no evidence of a pre-existing window, as siding would conceal the opening. The Commission was in agreement with the applicant to keep the window in tact without improvements. Council should discuss if they agree with the recommendation by HPC.
- Replacement of all siding and fish-scale shingles although investigation shows the condition ranges from good to excellent.
  The investigation was inconclusive with no direct evidence the siding is historic. It was determined the fish-scale shingles although in good condition to be non-historic. The Commission agreed to proceed with replacing the siding and fish-scale shingles.
- Construction of a new porch railing without sufficient evidence that the design existed during the NHL district's period of significance; construction of a higher porch railing than that found historically.
  The size and roof shape of the one-story wrap-around porch will be retained. The following materials, although likely not original to the building, will be retained: turned porch posts, decorative lattice spandrel, corbel on posts, and porch fascia. The porch ceiling and flooring will be replaced with wood. Although the porch railing details have ***not*** *been finalized, it is proposed that the porch railing/baluster resemble the "Chippendale" style seen in photographs from the Gilpin County Assessor's office, but taller to meet current building code. The design guidelines recommend that in the absence of documentation of the original porch, a simplified design found on houses of similar age and style is preferred. The Commission agreed the porch design should be the applicant's preference and any changes to current design could be administratively approved by staff.*
- Removal of historic woven wire fencing along the south property line and replacing it with an ornate design in wrought iron not found historically.
  Re-use of the historic woven wire and incorporating it within a new fence on the rear retaining wall retains the historic materials. The material for the new front fence meets the residential design guidelines – black wrought iron – but the design is not one found historically. The Commission agreed the proposed fencing should move forward as proposed in the construction drawings.

The Commission should next discuss if there is sufficient evidence that the Certificate of Appropriateness application meets the intent of the criteria outlined in the City of Black Hawk *Historic Restoration and Community Preservation Fund Guide to Programs*, Section 16-368 of the *Black Hawk Municipal Code*, and Sections 2, 3, 4, 5, 6 and 7.4 of the *City of Black Hawk Residential Design Guidelines*.

At the conclusion of its discussion, the Historic Preservation Commission recommended to the Board of Aldermen ***APPROVAL*** of the Certificate of Appropriateness for full exterior rehabilitation and site work at 301 High Street based on the criteria set forth in the staff report dated December 2, 2014. The Certificate of Appropriateness application for 301 High Street meets the intent of the criteria outlined in the City of Black Hawk Historic Restoration and Community Preservation Fund Guide to Programs, Section 16-368 of the Black Hawk Municipal Code, and Sections 2, 3, 4, 5, 6, and 7.4 of the City of Black Hawk Residential Design Guidelines.

The Historic Preservation Commission also provided direction that if any minor product, materials, or color changes that meet the design guidelines can be approved by staff administratively.

STAFF RECOMMENDATION

Staff recommends to the Board of Aldermen ***APPROVAL*** of the Certificate of Appropriateness for full exterior rehabilitation and site work at 301 High Street based on the criteria set forth in the staff report dated December 2, 2014. The Certificate of Appropriateness application for 301 High Street meets the intent of the criteria outlined in the City of Black Hawk Historic Restoration and Community Preservation Fund Guide to Programs, Section 16-368 of the Black Hawk Municipal Code, and Sections 2, 3, 4, 5, 6, and 7.4 of the City of Black Hawk Residential Design Guidelines.

RESOLUTION DATE:	December 10, 2014
ORIGINATED BY:	Community Planning and Development
STAFF PERSON RESPONSIBLE:	Cynthia L. Linker
DOCUMENTS ATTACHED:	Staff Report and Attachments A-E
CITY ATTORNEY REVIEW:	[ ] Yes [X] No [ ] N/A INITIALS_____
SUBMITTED BY:	**REVIEWED BY:**
Cynthia L. Linker 12/04/14	Jack D Lewis
Cynthia L. Linker, CP&D	Jack D. Lewis, City Manager

CITY OF BLACK HAWK	Report Date:	December 2, 2014
PLANNING / LAND USE	HPC Meeting Date:	December 2, 2014
	Council Meeting Date:	December 10, 2014

STAFF REPORT:

For:	City Council
Project:	Certificate of Appropriateness for Full Exterior Rehabilitation and Site Improvements
Property Address:	301 High Street
Property Owner:	Lloyd and Christina Larsen
Zoning:	Historic Residential (HR)
Prepared by:	Deon Wolfenbarger, Historic Preservation Consultant
Approved by:	Cynthia Linker, City of Black Hawk

BACKGROUND

The applicants, Lloyd and Christina Larsen, are requesting approval of a Certificate of Appropriateness (COA) for full exterior rehabilitation of the historic dwelling and site improvements for the property at 301 High Street.

The estimated date of construction for the house at 301 High Street is ca. 1897. The 1900 Sanborn map (the first time the building appears) shows that the building was originally one story [figure 1], but a second story was added by around 1910 [figure 2]. The property was first evaluated in 1986 when the National Park Service conducted a survey of historic resources in the communities of Black Hawk, Central City, and Nevadaville. In 1991, when Black Hawk was added to an expanded National Historic Landmark district, 301 High Street was counted as a "contributing" building to the historic district, meaning it had retained sufficient integrity to contribute to the historic character of the district. The 1986 survey provided the following description of the main building:

> This residential structure is a 2-story rectangular plan building with a gable roof covered with asphalt shingles. Walls are covered with horizontal wood siding and the medium foundation is brick. Windows generally are 1-over-1 light wood sash with flat arches; the primary door is wood paneled with 1 light in the door panel and 1 overlight. There is 1 central interior brick chimney. Distinctive features include a bay window on the façade.

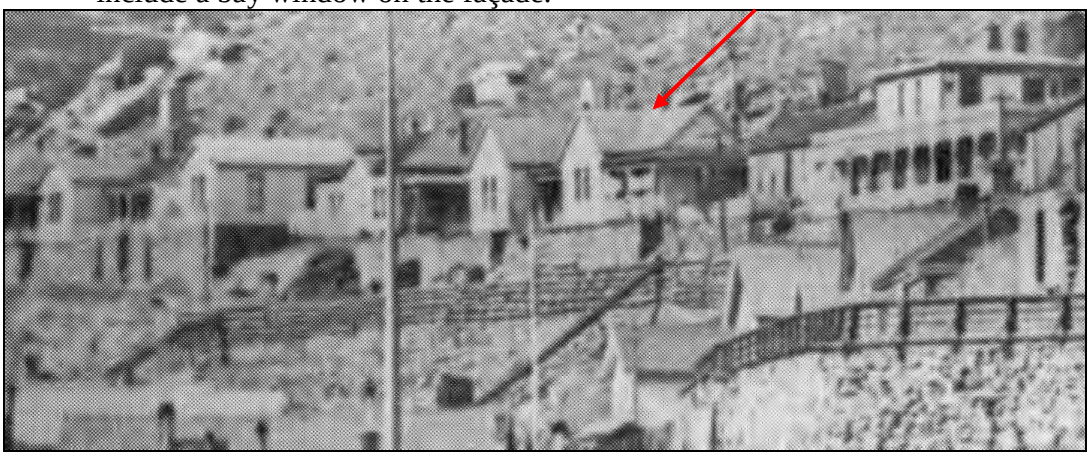

Figure 1. Photograph ca. 1898.

Figure 2. Photograph ca. 1910.

In 1997, a standing seam metal roof was installed and a new wood deck added to the rear. There are two frame sheds on the property. The rear shed, formerly an outhouse, is over fifty years of age and is eligible for grant funding. The shed on the east is less than fifty years old and is not eligible for grant funding [see Figure 3].

Figure 3. A) 1997 deck; B) non-historic shed; and C) historic outhouse.
Photo from 2005 also shows the previous design of the porch rails.

The property has received a total of $122,943.36 in grant funds over the years.

- 1995: $19,695.18 for boiler, foundation, stairs, deck repairs, 1/3 exterior rehab
- 1996: $26,418.63 concrete foundation repair, drainage improvements, roof repairs

- 1997: $21,945.00 for new roof, gutters, new deck, kitchen remodel, refinish historic doors, insulation
- 1999: $31,074.56 for interior walls, flooring, stairway modifications, cold room drainage corrections, and unspecified
- 2006 [emergency grant]: $10,030.00 for repairs due to mechanical room roof collapse
- 2008: $10,780.00 for exterior paint

In 2010-2011, a re-survey and evaluation of the historic district found that property was still "contributing" to the National Historic Landmark district. Any alterations to the building should be reviewed for their impact to the building's contributing status.

The applicants are requesting approval of the following work, which requires a Certificate of Appropriateness:

Site work

- Stone retaining walls: replaced only as required for utility replacement, stairs, and for documented structural failures along High Street.
- Replace wood site stair from High Street with concrete stair. Install steel pipe handrail.
- Replace ground level exterior wood deck/patio with concrete patio.
- Install decorative wrought iron fence along High Street.
- Replace metal pipe retaining wall at rear (north) side of house with a concrete retaining wall; install stone veneer along elevations visible from street.
- Reinstall existing wire fencing currently along High Street at the north side of property (on new concrete retaining wall); add steel posts and rails.
- Outhouse: demolish metal lean-to (non-historic); rotate wood shed in place to improve accessibility.

Residence – exterior rehabilitation

- Replace exterior stone structural wall of house at rear (north) side with concrete walls.
- Remove east-facing asphalt shingle walls on rear addition; replace with concrete
- Rear decks: replace decking, balusters, and stairs with new redwood decking (no colored stain).
- Install a new roof form beneath Deck 2 at rear of house to improve drainage.
- Remove standing seam metal roofs on residence and outhouse, install asphalt shingles.
- Install non-painted half round metal gutters with round metal downspouts.
- Repoint brick chimney.
- Replace existing siding on residence and outhouse with wood lap siding with 4" reveal.
- Replace existing trim where needed; retain the following existing trim: turned porch posts, decorative lattice spandrel, corbel on posts, and porch fascia.
- Remove non-historic front porch rail and balusters; replace with porch rail similar to that seen in historic photographs except built to code-compliant height.
- Windows: all windows except <u>Window H</u> to be replaced with Marvin aluminum clad windows. Window H will be non-operable due to interior alterations.
- Doors: all doors will be replaced with wood doors and new metal storms. The opening for <u>Door 3</u> will be widened to 3'-0" for egress.

- Stone foundation will be replaced with a concrete foundation with stone veneer on the south and southeast.
- Install new exterior lighting.
- Repaint house.

In accordance with the Black Hawk Municipal Code, all final plans for a Rehabilitation Grant must be reviewed by the Historic Preservation Commission as well as City Council.

APPLICABLE CITY OF BLACK HAWK REGULATIONS

Excerpt from:

City of Black Hawk
Historic Restoration and Community Preservation Fund Guide to Programs

Section 1: Program Overview, (e) General Program Information, (3) The City Council shall have the authority in its sole discretion to deny any application submitted for a grant or easement project if, in their opinion, the Property Owner has neglected to adequately maintain their property allowing it to become in a state of disrepair.

Excerpt from:

City of Black Hawk Zoning Code
Chapter 16
Section 16-368, City Council historic review process

16-368: Anyone seeking to renovate the exterior of, add to or construct a new building shall be subject to the following procedures. Any such renovation construction or demolition shall be subject to the City's design standards.

f. Criteria for determining appropriateness of proposed erection, construction, reconstruction or alteration. In determining the appropriateness of a proposed site plan or building permit for the erection, construction or alteration of a building, the HPC and the City Council shall consider the following:

1. ***All plans, drawings and photographs as may be submitted by the applicant;***
   The scope of work described in this report and illustrated by photographs, plans and manufacturers' sheets show the existing conditions and adequately describes he proposed alterations.

2. ***Information presented at a public hearing held concerning the proposed work;***
   Findings and recommendation from Historic Preservation Commission will be presented to the Board of Aldermen at the Public Hearing scheduled for December 10, 2014.

3. ***The purpose of this Chapter;***
   The information received adequately describes the proposed work in order to determine the appropriateness of the proposed rehabilitation.

4. ***Compliance with the Black Hawk Municipal Code and the payment of all fees required by the Black Hawk Municipal Code;***
   The project complies with all regulations of the Municipal Code.

5. ***The historical and architectural style, the general design, arrangement, texture, materials, and color of the development, building or structure in question or its appurtenance fixtures; the relationship of such features to similar features of the other buildings within the City and the position of the building, structure, park or open space in relation to public right-of-way and to other buildings and structures in the City;***
   The historic residence is an example of a "National Folk" form - the *gable-front-and-wing* (as defined by Virginia and Lee McAlester). It is comprised of a gable-front section, with an additional side-gabled wing added at right angles. A shed roof porch was typically placed within the L made by the two wings; in this instance, the porch continues to wrap around the side as was common in Queen Anne style houses. The roof ridge of the gable-front portion is higher than the side gable wing; this stepped shape is common in those buildings that were added to over time, which was the case with this residence. It was originally a one-story building, but shortly after its construction, a second story was added to the west gable-front wing. At this time, a three-sided bay window was added to the first story, and fish-scale shingles added to the two gable ends. A recent wood evaluation indicates that the elaborate porch posts, spandrels and frieze were likely *not* extant from the original construction. A rear shed-roof addition was added by 1910; dates of other rear additions are unknown. The rear decks are non-historic. The building still retains its architectural integrity, and contributes to the historic district.

Figure 4. 301 High Street

6. ***The effects of the proposed work upon the protection, enhancement, perpetuation and use of the City which cause it to possess a special character or special historical or aesthetic interest or value; and***
   The property was re-evaluated in 2010-2011 and was determined "contributing" to the National Historic Landmark historic district. **The HPC should review the proposed alterations and evaluate their effect on the historic property's potential eligibility**.

7. ***The design standards for the City.***
   Sections *2. Site Design*; *3. Rehabilitation of Historic Structures*; *4. Paint, Paint Colors and Lead Paint Issues; 5. Additions to Historic Structures; 6. Historic Accessory Structures;* and *7.4 Exterior Lighting* of the City of Black Hawk Residential Design Guidelines adopted in 2011 apply to this application. Listed below are the applicable sections and evaluation of the proposed alterations for 301 High Street for compliance.

Excerpts from:

City of Black Hawk Residential Design Guidelines
2. Site Design

2.1 ***Site design***

2.2.1. Respect historic settlement patterns and traditional patterns of building alignment and orientation

2.2 ***Topography and Grade***

2.2.1 Existing topography should be maintained whenever possible.
- **b. Where natural rocks remains in stable condition, leave it undisturbed.**

2.2.2. Respect natural site features.
- **a. Buildings should be located and designed to accommodate any features or limitations.**

2.2.3. Minimize cut and fill that would alter the natural topography of the site.
- **b. use earth berms, rock forms, or stone retaining walls to minimize the visual impacts of cuts.**

2.2.4. Use terraces for sloped building sites.
- **b. The use of rock retaining walls, similar to those used historically, is encouraged.**

2.2.5. All land that is visible from a public way shall be reclaimed in a manner described below.
- **a. Preferred reclamation methods are:**
  - **Plantings, as provided in the landscape standards**
  - **Natural rock, in a stable condition**
  - **Concrete retaining walls faced with native stone or appropriate wood cribbing.**

2.2.6. Retain existing natural drainage patterns where possible; design new drainage systems to complement and follow the existing terrain.
- **a. Design drainage systems and storm water detention basins as amenities.**

2.3 ***Fencing***

2.3.1. Painted wood, wrought iron, picket, woven wire, rail or stone fences are appropriate in residential-type areas.

a. Wrought iron fencing should be either black or rust colored.

2.3.4. Fences shall be similar to those seen historically.

2.4 ***Retaining walls***

2.4.1. Historic stone walls and other site features should be repaired or restored, replacing only those portions that are deteriorated beyond repair.

2.4.2. Native stone retaining walls are encouraged.

a. Stone walls should be similar in appearance to those seen historically, including finishing, joining, and height.

2.4.3. Retaining walls should be of dry stone or stone masonry and be compatible with other features onsite.

2.4.5. Use walls to prevent erosion and drainage issues.

Summary of proposed site design & evaluation of proposal's compliance with Section 2:
The following elements of the site plan meet the design guidelines: The existing topography is maintained, cut and fill is minimized, and the existing terrace is maintained for the sloped site at the rear of the property. Although not necessarily designed as an amenity, the new drainage swale system at the rear matches the concrete patio and sidewalks, and from the street, will have a minimal visual impact [see Attachment B, sheet C200].

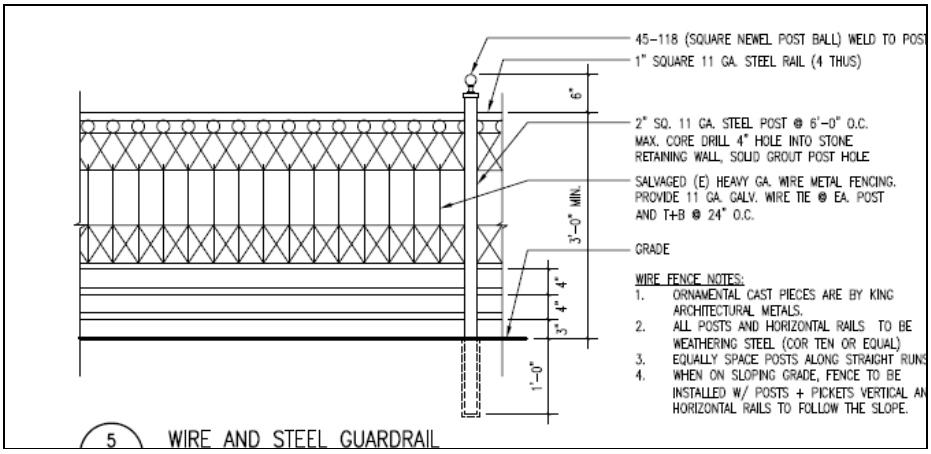

Figure 5. Details of woven wire fencing incorporated into a new fence.

Removal of the historic woven wire fence along the front property line does not meet the Secretary of the Interior's guidelines. Re-use of the historic woven wire and incorporating it within a new fence on the rear retaining wall, however, retains the historic materials [see Attachment B, sheet A000 and Figures 5 & 7]. The material for the new front fence meets the design guidelines – black wrought iron – but the design is not one found historically [see Attachment B, sheet A000 and Figure 6]. A gate will be at the bottom of the stairs.

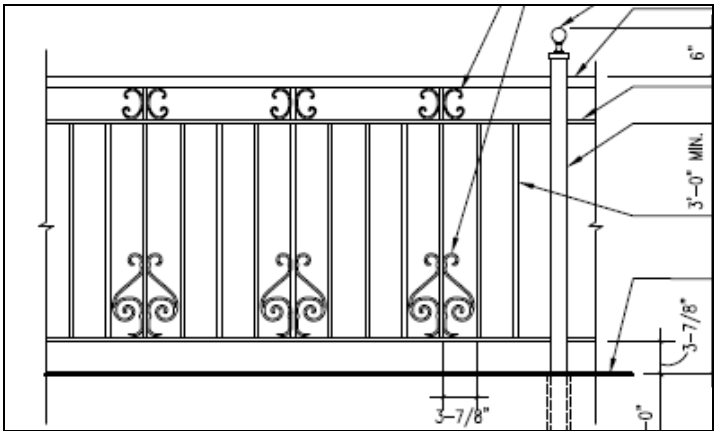

Figure 6. Detail of wrought iron fence.

A new concrete retaining wall at the rear (north) side of the house will prevent erosion, which meets the design guidelines. Stone veneer will be added to those portions visible from the street. The existing stone retaining walls along the front (south) property line will be retained wherever possible, and rebuilt where required for construction of the new site stairs and for utility replacement [see Figure 7; Section 4 in Attachment C; and A000, C200, C301 in Attachment B].

Figure 6. Stone retaining walls along High Street (south property boundary).
Also note the historic woven wire fencing.

The historic outhouse will be retained in place, but its orientation will be rotated 180 degrees so that the door will face an accessible portion of site. This follows the design guidelines in that building should be located to accommodate site limitations. Disturbed ground in the front of the house and on the east side will be grass, which also follows the design guidelines.

The existing site stairs are wood; the original materials are unknown. These stairs will be replaced with concrete, requiring reconstruction of the abutting stone retaining walls. The new stairs will remain in the historic location, and will be the same width as the existing. A steel pipe

handrail will be installed. The existing wood ground-level deck on the east side of the house will be demolished, and replaced with a larger concrete patio (see sheet A000 in Attachment B). The concrete will not be tinted, and will be scored as seen in the plans. The design guidelines do not address patios, but this patio will not be highly visible from the public right-of-way due to the rise in topography.

Excerpts from:

3. Rehabilitation of Historic Structures

3.1 ***Appropriateness of Use***

3.1.1 Seek uses that are compatible with the historic character of the building

3.2 ***Roofs***

3.2.A.1. Preserve the original roof form. This includes the roof's shape and decorative features.

3.2.B.2. When repair or replacement is necessary, use materials similar to the original.

3.2.C.3. Half round galvanized gutters are historically appropriate and preferred on residential homes.

3.3. ***Exterior Materials: Wood Siding and Masonry***

3.3.A.1. Original historic finish materials should be preserved, rehabilitated and/or repaired.

a. If portions of wood siding must be replaced, be sure to match the lap dimensions of the original.

3.3.B.4. Repair or replacement of mortar should be done by a masonry professional experienced in historic masonry repair.

3.3.C.1. Protect and maintain significant stylistic elements.

a. Avoid removing or altering any historic material or significant features.

b. Repair historic building features that are deteriorated where feasible.

c. When disassembly of an historic element is necessary for its restoration, use methods that minimize damage to the original materials.

d. Use the gentlest possible procedures for cleaning, refinishing, and repairing historic materials.

3.3.C.2. Replace missing original features in kind where feasible

a. Replacement of missing architectural elements should be based on accurate information about original features.

b. Where reconstruction of an element is impossible, develop a compatible new design that is a simplified interpretation of the original.

3.4 ***Doors***

3.4.1. Retaining and preserving original doors and door openings is preferred rather than replacement.

3.4.2. Retain and preserve the functional, proportional and decorative features of a primary entrance.

a. Such features can include frames, sills, heads, jambs and moldings.

b. Door materials should be wood or appear similar to wood.

3.4.5. Avoid changing the position of historic doors.

b. Also avoid adding additional doors to facades that are visible from the street.

3.4.6. When replacing doors, use designs similar to those found historically on comparable buildings in Black Hawk.

c. Contemporary ornate doors are discouraged on "contributing" buildings, unless photographic evidence can substantiate their historic use.

3.4.7. If heat loss or energy conservation is a concern, consider installation of a storm door instead of replacing a historic entry door.

a. wood storm door is preferred. A colored metal storm door, featuring a simple design, may be appropriate.

3.5.C.6. Genuine, transparent glass shall be used in all windows and doors.

3.5 ***Windows***

3.5.A.1. Identify, retain and preserve the functional and decorative features of windows found historically.

3.5.C.1. If replacement is necessary, replace in-kind. However, window materials that appear similar to wood may be considered on a case-by-case basis.

3.5.C.3. Avoid changing the position of historic windows.

3.5.C.4. Maintain the historic subdivisions of windows.

b. Where multiple-pane windows are appropriate, true divided lights are preferred. This especially true for windows that are at ground level and close to sidewalks and walkways where the window details may be clearly seen by the public.

c. Do not use "internal" muntins that are stuck between two layers of glass. Snap-in muntins may be used on larger areas of glass in new construction, provided they are installed on both sides of the glass.

3.5.C.6. Genuine, transparent glass shall be used in all windows and doors.

3.6 ***Porches***

3.6.1. Original porches should be preserved.

3.6.3. Reconstructing a missing historic front porch is encouraged.

a. The replacement porch should be based on documented evidence of the original porch.

b. In the absence of documentation of the original porch, design a simplified version of porches found on houses of similar age and style.

3.7 ***Decks***

3.7.1. Minimize the visual impact of any decks.

3.7.2. Decks should be subordinate to the house in terms of scale and detailing.

3.7.4. Railings should be similar to historic railing heights.

3.7.5. Decks should be painted or stained to match the exterior color of the house, but will be reviewed on a case by case basis.

3.7.6. Materials with a synthetic look should be avoided, but will be reviewed on a case by case basis.

Summary of proposed exterior rehabilitation & evaluation of compliance with Section 3:
Proposed use: The historic use of this building was residential, and it will remain residential after rehabilitation. This meets the design guidelines and the Secretary of the Interior's Standards for rehabilitation.

Roofs: The roof shapes over the main portions of the house (gable-front-and-wing) will be unchanged. The new roofing material will be asphalt shingles, color "Aged Cedar" manufactured by Owens Corning [see figure 13]. Although the original roofing material is unknown, it was not metal as is presently on the building. Instead, the original roofing was likely wood shingles, and the proposed asphalt shingles are an acceptable substitute. The rear addition located beneath the deck will have a new roof shape to provide better drainage. This addition is not visible from the public right-of-way and will not have a negative impact.

Exterior Materials: The wood siding, trim and windows were evaluated by Anthony & Assoc. [see Attachment D]. That report found the horizontal wood siding and decorative fish-scale shingles to generally be in good to excellent condition, with the following exception: the siding above the west window line is cupped, warped, and/or twisted. It was appraised that this material may be historic, and the lower siding replaced at some time. The decorative fish-scale shingles were also estimated to be non-original as they were in pristine condition.

Wood species identification in various places around the building indicated that the majority of the siding and decorative porch elements are not original to the construction of the building. Both the design guidelines and the Secretary of the Interior's Standards recommend retaining historic wood siding and features; repair the siding whenever possible; and if not possible, to replace in-kind. The rehabilitation plans propose to replace all siding and the fish-scale shingles. Since the wood siding is not original and historic photographs do not provide enough detail about the original materials, these standards may not apply. The proposed replacement will match the existing siding and shingles in size and materials, but it is unknown if these are identical to the original construction.

The stone foundation will be replaced with a concrete foundation, which will have stone veneer on the south and southeast. The stone veneer will be set in-line with siding, but may still have the appearance of veneer [see Figure 7, taken from Section 1, sheet S400, Attachment B].

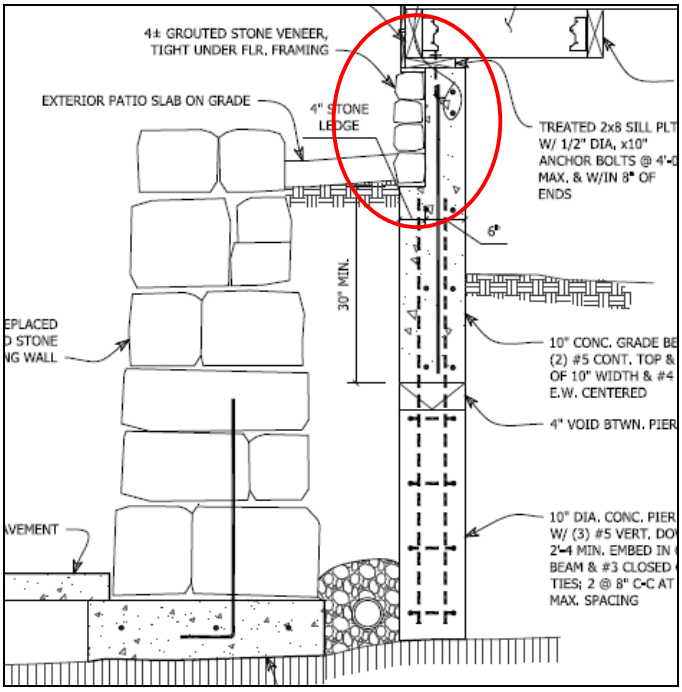

Figure 7. Section plan of concrete foundation with stone veneer.

The small rear addition currently has asphalt shingle siding; this wall will be rebuilt as concrete. As it is not visible from the public right-of-way, this will not have a negative impact [see Sheet A300 in Attachment B and Figure 8].

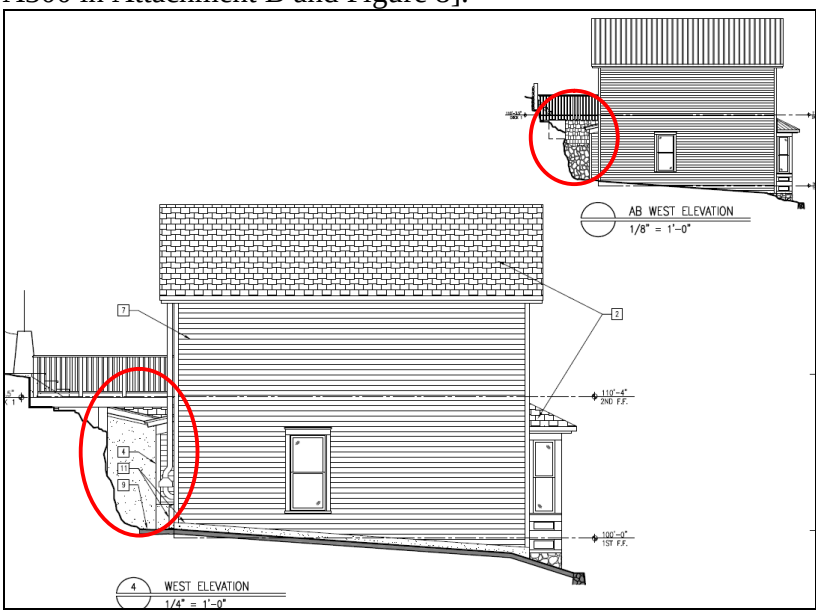

Figure 8. West elevation of rear addition

Doors: There are no new doors proposed, nor are the locations of any doors changing. However, all doors and framing materials are proposed for replacement and one primary door opening (on the east elevation of the gable-front wing) is proposed to be enlarged, which will require removing the existing transom above the door, and replacing it with a larger transom.

This does not meet the Secretary of the Interior Standards or the design guidelines. The transom above the other primary door will be rehabilitated, which meets the standards and design guidelines. While the wood replacement doors are similar in style to those found historically, they are not identical to the present doors. The exterior door handles will be Kwikset's "Shelburne" in Venetian Bronze, and the storm doors will be dark metal [see Figures 9 and 10].

Figure 9. Door on left will be installed at locations 2, 3, and 10 (2nd story rear); door on right will be installed at location 1. Doors will be painted. The metal storm doors will have a moveable upper sash.

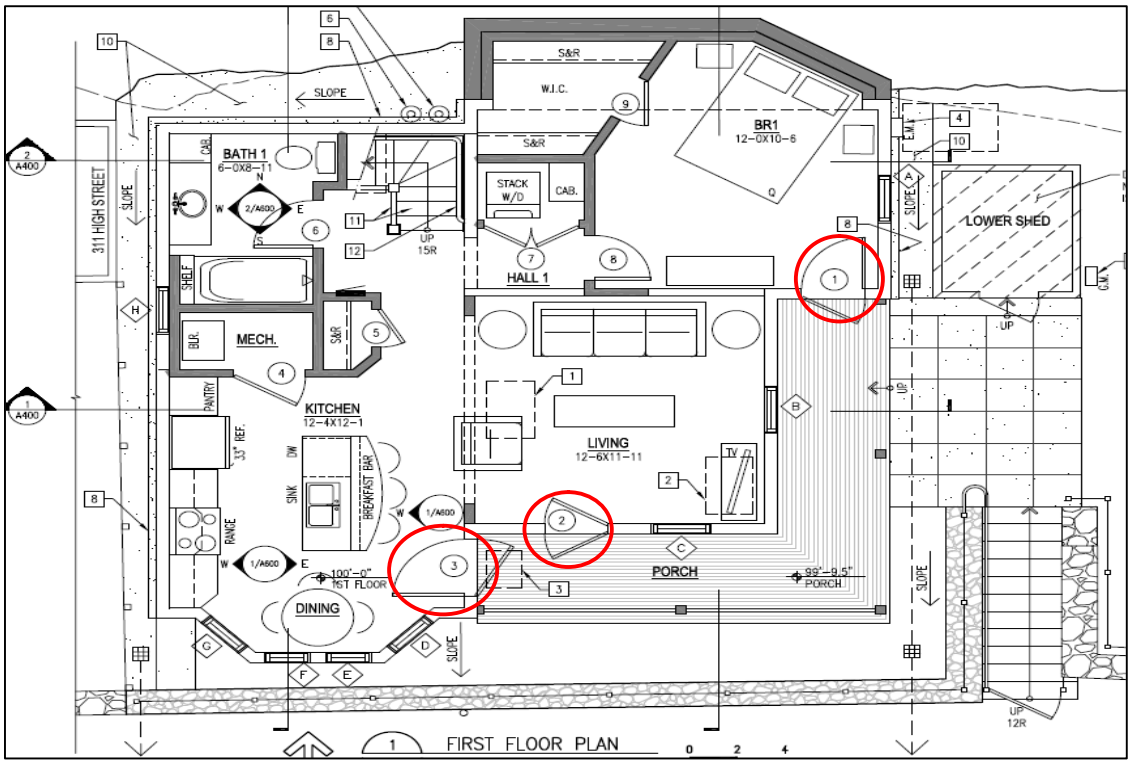

Figure 10. Door locations 1, 2 & 3.

Windows: Although the windows were not available for close inspection, due to the visible historic hardware, they were estimated to be "historic and/or original to the construction or early modification of the building." [see page 4, Attachment D]. All historic windows are proposed for replacement with double-hung, aluminum clad wood windows with clear glazing [see Figure 11 for window type and color]. The only exception is the window on the west elevation, which will be retained. The design guidelines recommend a prioritized approach to historic windows. First, preserve and repair historic windows. If too deteriorated, then replace in-kind, matching size, materials, and style. Replacement materials that are similar to wood may be considered on a case-by-case basis.

Figure 11. Proposed replacement windows, exterior view. Exterior color: Desert Beige.

Porch: The size and roof shape of the one-story wrap-around porch will be retained. The following materials, although likely *not* original to the building, will also be retained: turned porch posts, decorative lattice spandrel, corbel on posts, and porch fascia. The porch ceiling and flooring will be replaced with wood. Although the porch railing details have not been finalized, it is proposed that the porch railing/baluster will resemble the "Chippendale" style seen in photographs from the Gilpin County Assessor's office, but will be taller [see Figure 12; compare to assessor's photos in Attachment A]. This reconstruction is based on photos from the late 20th century, which is possibly insufficient historic evidence for the original design. The design

guidelines recommend that in the absence of documentation of the original porch, a simplified design found on houses of similar age and style is preferred.

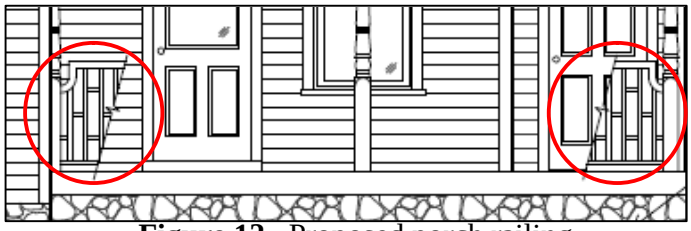

Figure 12. Proposed porch railing

Decks: The existing decks on the rear are proposed to be reconstructed, as it is necessary to remove them to rehabilitate the rear additions. The existing deck is partly visible from the public right-of-way, and the railing heights are not similar to those found historically. The replacement decks and railing will be unpainted, sealed redwood. This will require yearly maintenance to maintain the existing color of the wood. The design guidelines recommend painting or staining the decks to match the exterior color of the house.

Excerpts from:

4. Paint, Paint Colors and Lead Paint Issues

4.1 ***Color***

- **4.1.1. Use historic color schemes.**
- **4.1.2. Develop a color scheme for the entire building that coordinates all the façade elements.**
- **4.1.3. Use muted colors for the base and brighter colors for accents.**
- **4.1.4. Leave natural masonry finishes unpainted when feasible.**

Evaluation of proposed paint scheme and proposal's compliance with Section 4:
Paint schemes that use more than three colors must be approved by the Board of Aldermen. The proposed colors and paint scheme for the building meet the design guidelines by utilizing a coordinating scheme with muted colors [see Figure 13].

Figure 13. *Note:* Colors may appear different on monitors.
Samples are available for review at the CP&D offices and at the public hearing.

Excerpt from:

5. Additions to Historic Structures

5.1. Preserve older additions that have achieved historic significance in their own right.

- **a. Examples may be a porch or a kitchen wing that was added to the original building early in its history.**
- **b. Most alterations 50 years and older have achieved historical significance.**

Summary of proposed exterior rehabilitation & evaluation of compliance with Section 5:
The shed roof addition on the northeast side of the residence is visible in photographs from ca. 1910, and is therefore historic. It is being rehabilitated, which meets the design guidelines. However, the roof form is changing to better accommodate drainage. This is not visible from the public right-of-way, and is located beneath the rear decks.

Excerpts from:

6. Historic Accessory Structures

6.1 Preservation of Historic Accessory Structures

1. The preservation of accessory structures is strongly encouraged.

a. Historic sheds and outhouses should be maintained.

6.2 Rehabilitation of Historic Secondary Structures

1. Repair deteriorated historic building features when feasible.

a. Use the gentlest possible procedures for cleaning, refinishing, and repairing historic materials.

2. Replace missing original features in kind when feasible.

3. When disassembly of an historic element is necessary for its restoration, use methods that minimize damage to the original materials.

4. Replacement of missing architectural elements should be based on accurate information about original features.

Summary of proposed exterior rehabilitation & evaluation of compliance with Section 6:
The outhouse is over 50 years of age. It has a metal lean-to addition (age unknown). The outhouse is proposed for rehabilitation, while the metal lean-to is proposed for demolition. The existing siding and roof material will be replaced with materials and colors matching the house. The historic door will be replaced with a similar wood door, and will be painted the same color as the siding. The proposal also changes the orientation of the elevation with the door, so that the entry for the shed faces west. Finally, a small glass window will be next to the door [see sheet A000, Attachment B]. While the new door orientation will not be highly visible from the street, the replacement siding is not based on historic documentation, and the age and condition of the present siding has not been evaluated.

Excerpts from:

7.4. Exterior Lighting

7.4.1. Lighting fixtures should contribute to the overall historic character of a house or neighborhood.

7.4.2. Lighting should be functional not just historically decorative.

7.4.3. All lighting should focus downward.

Summary of proposed exterior rehabilitation & evaluation of compliance with Section 7:
The locations of the exterior lights are shown in Attachment B. There will be three fixtures located on the first floor of exterior of the house: one between the two primary doors, one at the southeast corner, and one at the door on the rear addition. There will be two fixtures on the second story: one on the east well, and one at the rear door. The fixtures will be dark metal lantern-type, seen in Figure 14. Dark metal, lantern-type fixtures that have no upward light would meet the design guidelines.

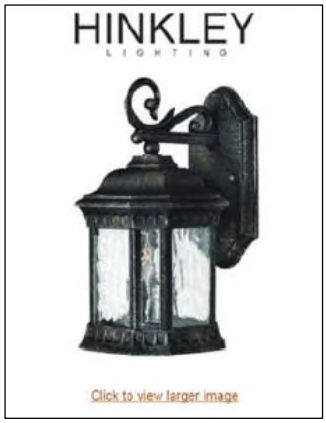

Figure 14. Exterior light fixture.

APPLICABLE GUIDE TO PROGRAM STANDARDS

All grants, whether Full Site Building, Site Work, Emergency or Radon Mitigation, must adhere to the eligibility requirements in the City of Black Hawk Historic Restoration and Community Preservation Fund Guide to Programs, the Residential Design Guidelines, and the Secretary of the Interior's Standards for treatment of historic properties. The project was evaluated using these standards and staff found the elements of the proposal are in accordance and meet the requirements.

CONSULTANT COMMENTS

The exterior rehabilitation and site work described on page 3 of this report requires a Certificate of Appropriateness. The consultant's evaluation of the proposal finds that some elements of the proposed work are not in accordance with the City of Black Hawk Residential Design Guidelines and the U.S. Secretary of the Interior's Standards for Rehabilitation. These include:

- Enlargement of one of the primary door openings and transom (a character-defining feature).
- Replacement of all historic doors instead of rehabilitating the doors.
- Replacement of all historic windows with metal-clad windows without investigation of window condition.
- Replacement of all siding and fish-scale shingles although investigation shows the condition ranges from good to excellent.
- Construction of a new porch railing without sufficient evidence that the design existed during the NHL district's period of significance; construction of a higher porch railing than that found historically.
- Removal of historic woven wire fencing along the south property line and replacing it with an ornate design in wrought iron not found historically.

HISTORIC PRESERVATION COMMISSION RECOMMENDATION

The Historic Preservation Commission (HPC) evaluated the application, the comments in the report, and testimony by staff, consultants and the applicant. The list of non-conforming elements in the previous section served as a starting guide for the Commission's discussion. Following is the result of that discussion:

- Enlargement of one of the primary door openings and transom (a character-defining feature).
  Door No. 3 is the proposed location for the enlargement. It was the opinion of the Commission this would be the most logical location from a practical standpoint of moving furniture and the fact it was not easily visible from the public right-of-way.
- Replacement of all historic doors instead of rehabilitating the doors.
  This has been a rental property for many years and the doors have been abused. The Commission asked the applicant if their preference was to keep and restore or replace. The applicant felt the doors needed to be replaced and have chosen a style commonly seen throughout the District.

- Replacement of all historic windows with metal-clad windows without investigation of window conditions.
  Although the windows were not available for close inspection, due to the visible historic hardware, they were estimated to be "historic and/or original to the construction or early modification of the building." It is the applicant's desire and preference that all historic windows be replaced with double-hung, aluminum clad wood windows with clear glazing. Since the appearance of the replacement windows will simulate the original style the Commission agreed to replace. The only exception is the window on the west elevation. It is the applicant's preference to retain. It was originally designed to eliminate the window at the west elevation on the exterior and encapsulate on the interior. There would be no evidence of a pre-existing window, as siding would conceal the opening. The Commission was in agreement with the applicant to keep the window in tact without improvements. Council should discuss if they agree with the recommendation by HPC.
- Replacement of all siding and fish-scale shingles although investigation shows the condition ranges from good to excellent.
  The investigation was inconclusive with no direct evidence the siding is historic. It was determined the fish-scale shingles although in good condition to be non-historic. The Commission agreed to proceed with replacing the siding and fish-scale shingles.
- Construction of a new porch railing without sufficient evidence that the design existed during the NHL district's period of significance; construction of a higher porch railing than that found historically.
  The size and roof shape of the one-story wrap-around porch will be retained. The following materials, although likely not original to the building, will be retained: turned porch posts, decorative lattice spandrel, corbel on posts, and porch fascia. The porch ceiling and flooring will be replaced with wood. Although the porch railing details have ***not*** *been finalized, it is proposed that the porch railing/baluster resemble the "Chippendale" style seen in photographs from the Gilpin County Assessor's office, but taller to meet current building code. The design guidelines recommend that in the absence of documentation of the original porch, a simplified design found on houses of similar age and style is preferred. The Commission agreed the porch design should be the applicant's preference and any changes to current design could be administratively approved by staff.*
- Removal of historic woven wire fencing along the south property line and replacing it with an ornate design in wrought iron not found historically.
  Re-use of the historic woven wire and incorporating it within a new fence on the rear retaining wall retains the historic materials. The material for the new front fence meets the residential design guidelines – black wrought iron – but the design is not one found historically. The Commission agreed the proposed fencing should move forward as proposed in the construction drawings.

The Commission should next discuss if there is sufficient evidence that the Certificate of Appropriateness application meets the intent of the criteria outlined in the City of Black Hawk *Historic Restoration and Community Preservation Fund Guide to Programs*, Section 16-368 of the *Black Hawk Municipal Code*, and Sections 2, 3, 4, 5, 6 and 7.4 of the *City of Black Hawk Residential Design Guidelines*.

At the conclusion of its discussion, the Historic Preservation Commission recommended to the Board of Aldermen ***APPROVAL*** of the Certificate of Appropriateness for full exterior rehabilitation and site work at 301 High Street based on the criteria set forth in the staff report dated December 2, 2014. The Certificate of Appropriateness application for 301 High Street meets the intent of the criteria outlined in the City of Black Hawk Historic Restoration and Community Preservation Fund Guide to Programs, Section 16-368 of the Black Hawk Municipal Code, and Sections 2, 3, 4, 5, 6, and 7.4 of the City of Black Hawk Residential Design Guidelines.

The Historic Preservation Commission also provided direction that if any minor product, materials, or color changes that meet the design guidelines can be approved by staff administratively.

STAFF RECOMMENDATION

Staff recommends to the Board of Aldermen ***APPROVAL*** of the Certificate of Appropriateness for full exterior rehabilitation and site work at 301 High Street based on the criteria set forth in the staff report dated December 2, 2014. The Certificate of Appropriateness application for 301 High Street meets the intent of the criteria outlined in the City of Black Hawk Historic Restoration and Community Preservation Fund Guide to Programs, Section 16-368 of the Black Hawk Municipal Code, and Sections 2, 3, 4, 5, 6, and 7.4 of the City of Black Hawk Residential Design Guidelines.

ATTACHMENTS

A: Cultural Resource Evaluation Form
B: Selected plans, PEH Architects
C: Project Manual, PEH Architects
D: "Window, Siding, and Trim Investigation of 301 High Street," Anthony & Associates.
E: Technical handouts on historic porches: "ITS Number 9: Interpreting the Secretary of the Interior's Standards for Rehabilitation: Inappropriate Porch Alterations," & "Preservation Brief #45: Preserving Historic Wood Porches."

NOTICE OF PUBLIC HEARING

Notice is hereby given in accordance with the City of Black Hawk Zoning Ordinance that the City of Black Hawk Board of Aldermen shall hold a public hearing concerning a Certificate of Appropriateness for full exterior rehabilitation and site improvements at 301 High Street. This property is described in Exhibit A below and is generally located along High Street.

The public hearing is to be held before the City of Black Hawk Board of Aldermen on Wednesday, December 10, 2014 at 3:00 p.m. or as soon as possible thereafter. The public hearing shall be held in the City of Black Hawk Council Chambers located at 211 Church Street, Black Hawk, Colorado, 80422, or at such other time or place in the event these hearings are adjourned.

ALL INTERESTED PARTIES
MAY ATTEND

Melissa A. Greiner
City Clerk

Exhibit A

301 High Street –

S: 7 T: 3S R: 72W Subd: BLACK HAWK Block: 024 Lot: 024 AND:- Lot: 025 (LOT 24 W 8 FT), (LOT 25 E PT DESC 125/191) & IMPS

ATTACHMENT A

Cultural Resource Evaluation Form

BLACK HAWK CULTURAL RESOURCE SURVEY

Cultural Resource Re-evaluation Form

1. Current Address: **301 High Street**

2. Resource Number: **5GL.7.392**

3. NHL Resource Number: **B24-6**

4. Resource Name:

5. Purpose of this current site visit (check as many as apply)

____ Site is within a current project area
_**X**_ Resurvey
_**X**_ Update of previous site form(s)
____ Surface collection
____ Testing to determine eligibility
____ Excavation
____ Other

6. Previous Recordings:

_**X**_ 1986 National Park Service Survey	_**X**_ Photograph	
_**X**_ 1991 National Historic Landmark Nomination	No Photographs	_**X**_ Contributing
_**X**_ 1998 Re-survey	_**X**_ Photograph	
_**X**_ 2004 Photo survey	_**X**_ Photograph	
____ Other:	___ Photograph	

7. Exterior alterations since 1986: **1996: alteration permit valuation $25,000. 1997: alteration permit valuation $19,500. 2006: Roof repair. A rear deck may not date from 1986, although photos from that period are not clear.**

8. Additional historical background : **No houses on High Street are shown in 1890 Sanborn map, although a row of houses is visible in several historic photographs purportedly dating from the 1880s. A house is shown to the west of this location in the 1895 Sanborn map, while this land is vacant. This house appears in the 1900 Sanborn, but is only 1 story; this is corroborated in historic photos. By 1910, however, the gable-front portion was changed to 2 stories. Deed research is recommended to reconcile the construction date discrepancy between the Sanborn maps & historic photographs.**

_**Ca. 1897**_ Construction date _**X**_ Estimate from 1986 NPS Survey ___ New estimate

Sources of information: ***Digital Image Collection, Western History & Genealogy, Denver Public Library; The Gilpin Railroad Era (Abbot)***

Sanborn Maps

___ 1886

___ 1890

___ 1895

___ 1900

Current Address: **301 High Street**

Resource Number: **5GL.7.392**

NHL Resource Number: **B24-6**

9. Changes to Location or Size Information: **In addition to alterations noted in item 8, there are two small outbuildings not previously recorded in the 1986 survey, although they are visible in the 1986 survey photo.**

10. Revised National Historic Landmark District- Contributing Building Eligibility Assessment:

    Contributing _**X**__ Non contributing ____ Need data

11. National Register - Individual Eligibility Assessment:

    Eligible ___ Not eligible ____ Need data_**X**__

12. Is there National Register district potential? Yes _**X**__ No ____

    Discuss: **Would be a contributing building to a potential NR district.**

13. Local Designation - Individual Eligibility Assessment:

    Eligible _**X**__ Not eligible ____ Need data____

14. Is there Local district potential? Yes _**X**__ No ____

    Discuss: **Would be a contributing building to a potential local district.**

15. Photograph Types and Numbers: **Digital, <.jpg> format. 301 High-1.JPG, 301 High-2.JPG, 301 High-3.JPG**

16. Report Title: **Black Hawk Historic Resource Resurvey: 2009-2010**

17. Recorder(s): **Deon Wolfenbarger**

18. Date(s): **January 7, 2010**

19. Recorder Affiliation: **Three Gables Preservation**

20. Attachments
    (check as many as apply)
    _**X**_Photographs
    ___Site sketch map
    ___U.S.G.S. map photocopy
    _**X**_Other _____
    ___Other _____

21. Official determination
    (OAHP USE ONLY)
    ___ Determined Eligible
    ___ Determined Not Eligible
    ___ Need Data
    ___ Nominated
    ___ Listed
    ___ Contributing to N.R. District
    ___ Not Contributing to N.R. Dist

Current Address: **301 High Street**
Resource Number: **5GL.7.392**
NHL Resource Number: **B24-6**

Current Photograph
Date: **04/09/2009**

Current Address: **301 High Street**
Resource Number: **5GL.7.392**
NHL Resource Number: **B24-6**

2004 Photograph

1998 Resurvey Photograph

1986 Survey Photograph

Gilpin County Assessor's photograph

Gilpin County Assessor's photographs

Historic photographs

Ca. 1880

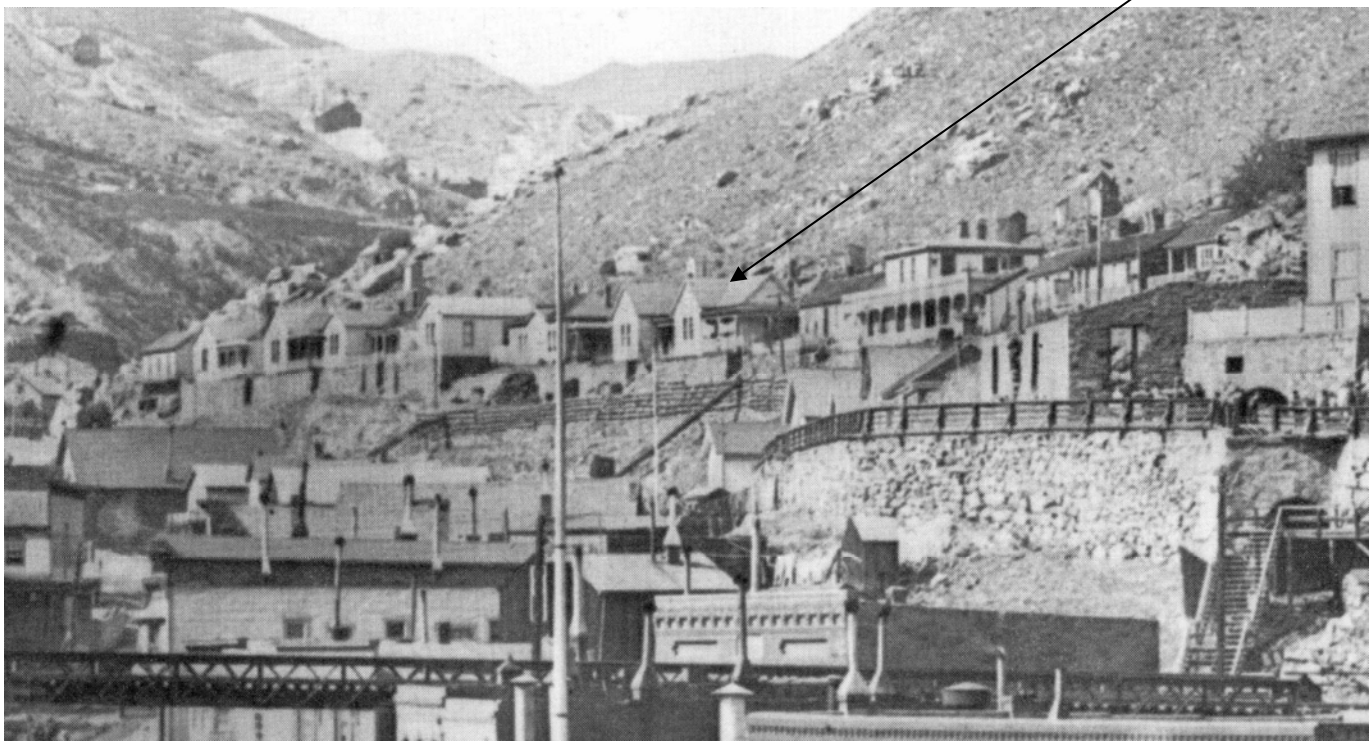

Ca. 1898

Current Address: **301 High Street**
Resource Number: **5GL.7.392**
NHL Resource Number: **B24-6**

Continuation Sheets

Historic photograph

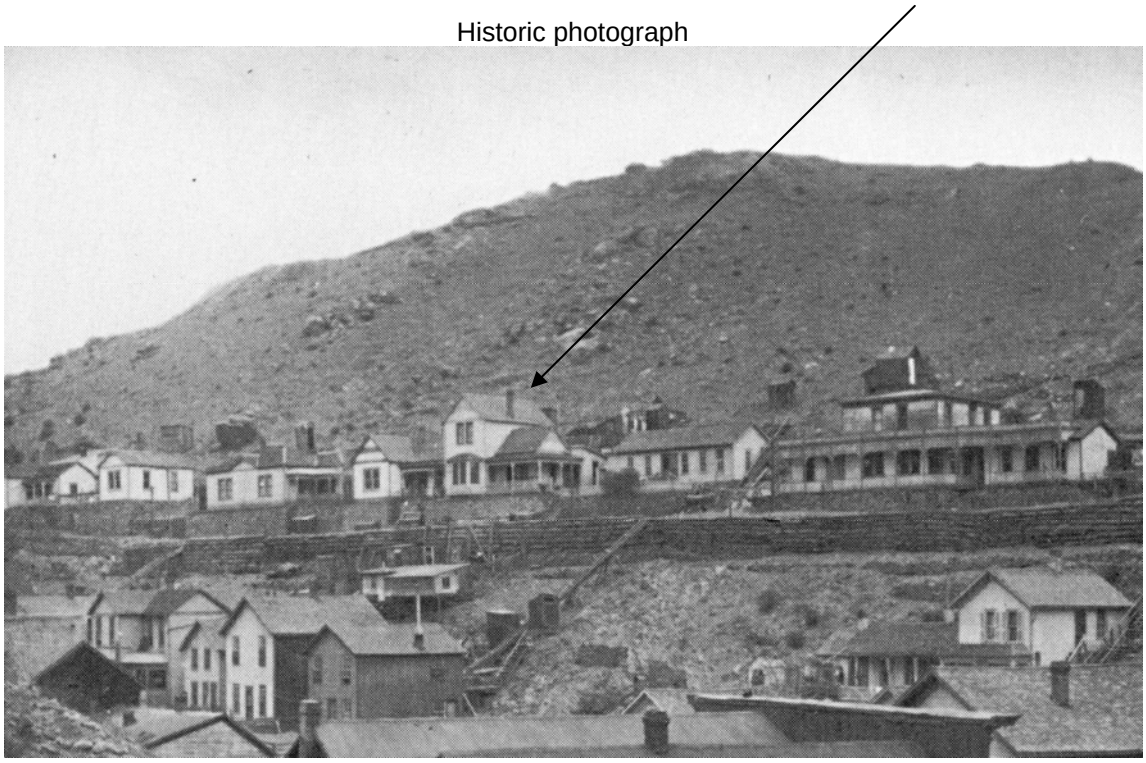

Ca. 1910

1900 Sanborn Map

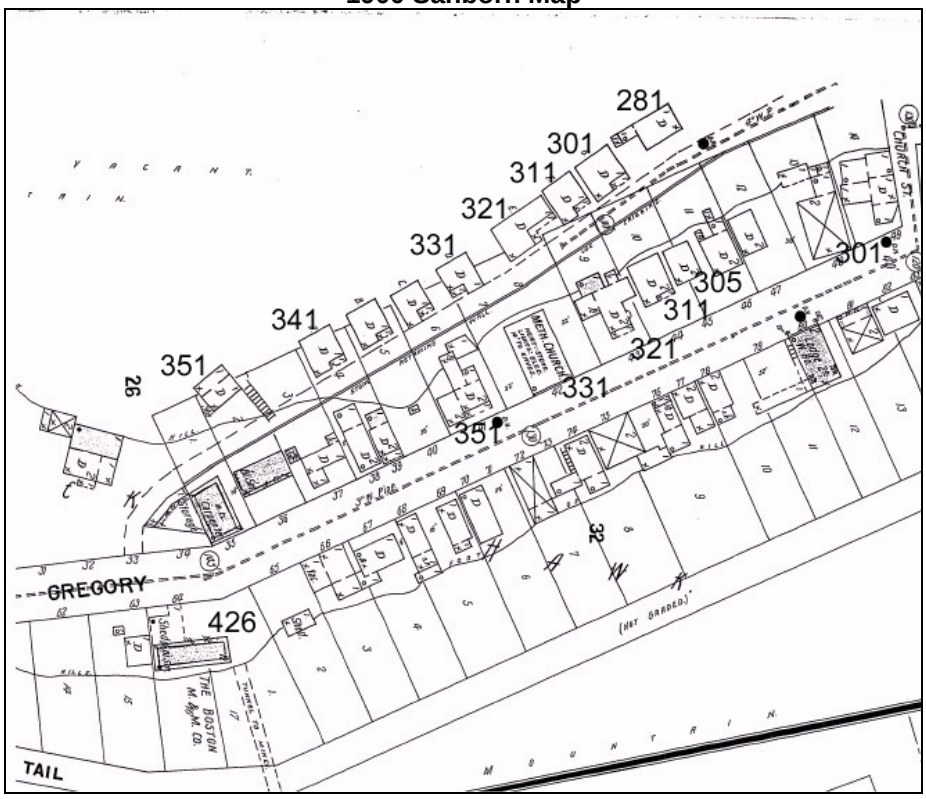

ATTACHMENT B

Selected plans, PEH Architects

301 HIGH STREET REHABILITATION

Black Hawk, Colorado 80422

ITEMS TO BE SELECTED OR VERIFIED:
1. REVIEW SOFT SURFACE OPTIONS FOR FRONT YARD ✓
2. WOULD ADDITIONAL LIGHT BE DESIRED AT FRONT PORCH OR EXTERIOR STAIR? ✓
3. IS THERE ELECTRICAL IN THE LOWER SHED THAT IS TO BE CONNECTED (N) PANEL? ✓
4. GUTTER AND CROWN FASCIA CONFLICT AT PORCH ✓
5. SHED DOOR IS WEATHERED/(N) SIDING WILL NOT BE WEATHERED ✓

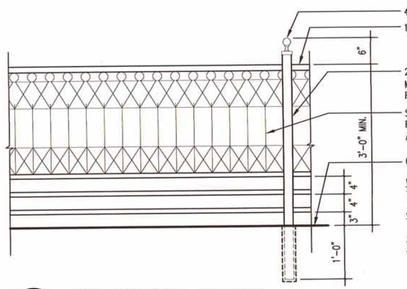

WIRE FENCE NOTES:
1. ORNAMENTAL CAST PIECES ARE BY KING ARCHITECTURAL METALS.
2. ALL POSTS AND HORIZONTAL RAILS TO BE WEATHERING STEEL (COR TEN OR EQUAL)
3. EQUALLY SPACE POSTS ALONG STRAIGHT RUNS.
4. WHEN ON SLOPING GRADE, FENCE TO BE INSTALLED W/ POSTS + PICKETS VERTICAL AND HORIZONTAL RAILS TO FOLLOW THE SLOPE.

5 WIRE AND STEEL GUARDRAIL
3/4" = 1'-0"

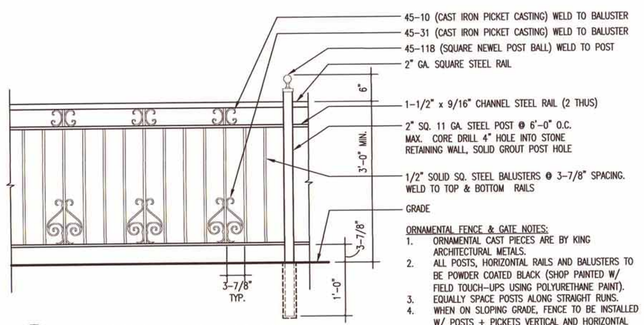

ORNAMENTAL FENCE & GATE NOTES:
1. ORNAMENTAL CAST PIECES ARE BY KING ARCHITECTURAL METALS.
2. ALL POSTS, HORIZONTAL RAILS AND BALUSTERS TO BE POWDER COATED BLACK (SHOP PAINTED W/ FIELD TOUCH-UPS USING POLYURETHANE PAINT).
3. EQUALLY SPACE POSTS ALONG STRAIGHT RUNS.
4. WHEN ON SLOPING GRADE, FENCE TO BE INSTALLED W/ POSTS + PICKETS VERTICAL AND HORIZONTAL RAILS TO FOLLOW THE SLOPE.

3 ORNAMENTAL METAL GUARDRAIL
3/4" = 1'-0"

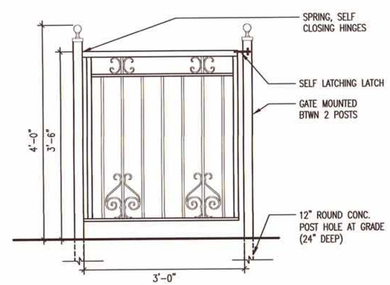

4 ORNAMENTAL METAL GATE
3/4" = 1'-0"

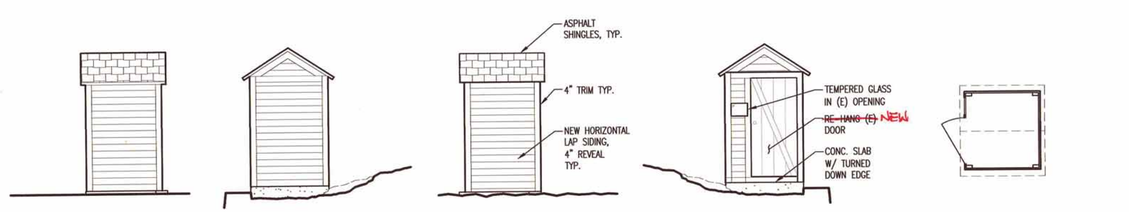

PROPOSED

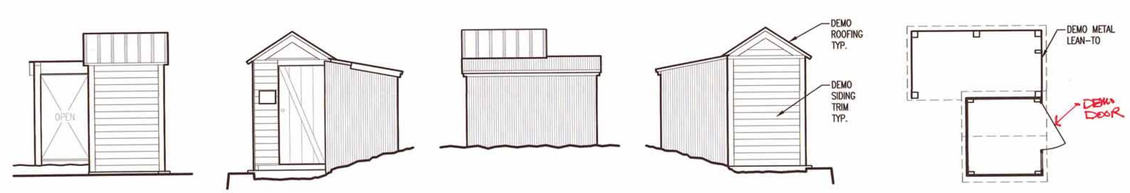

EXISTING

2 AB SHED PLAN
1/4" = 1'-0"

PROJECT DIRECTORY

CLIENT:
City of Black Hawk
P.O. Box 68
Black Hawk, CO 80422
Cindy Linker
P: 303-582-0615
clinker@cityofblackhawk.org
Tami Archer
P: 303-582-2223
F: 303-582-2239
tarcher@cityofblackhawk.org

OWNER:
Lloyd & Tina Larsen
P.O. Box 189
Black Hawk, CO 80422
P: (303) 582-5494

OWNER'S REP:
Constilium Partners
1738 Wynkoop Street, Suite 302
Denver, CO 80202
P: 303-501-2784
Jessica Killian, P.E., LEED GA
C: 303-328-5904
jessica.killian@NV5.com

UPDATE W/ NEW ADDRESS

ARCHITECT:
PEH ARCHITECTS
1319 Spruce Street, Suite 207
Boulder, CO 80302
P: 303-442-0408
F: 303-447-1905
Peter E. Heinz, AIA Principal
peheinz@peharchitects.com
Nathan P. Pillatzke, AIA
nathanp@peharch.com

STRUCTURAL ENGINEER:
Mozer-Renn Structural Services
6000 E. Evans Ave., Suite #1-021
Denver, CO 80222
Natalie Mozer-Renn, P.E.
P: (303) 759-2200
F: (303) 484-8958
mozer-renn@mrstructural.com

MECHANICAL ENGINEER:
Seward Mechanical Systems
801 Main St, Suite 310
Louisville, CO 80027
Paul Seward, P.E.
P: (303) 926-9245
C: (303) 587-5217
seward@steam-engine.com

ELECTRICAL ENGINEER:
JCN Engineering
3281 Routt St.
Wheat Ridge, CO 80033
Jeff Nielsen, P.E.
P: (303) 239-0736
C: (303) 324-1799
jcneng@comcast.net

CIVIL ENGINEER:
Loris & Associates
818 W. South Boulder Road, Suite 200
Louisville, CO 80027
Kevin Dooley
P: (303) 444-2073
F: (303) 444-0611
kdooley@lorisandassociates.com

SOILS ENGINEER:
Cesare, Inc.
7108 South Alton Way, Building B,
Centennial, CO 80112
Darin R. Duran, P.E.
P: (303) 220-0300
F: (303) 220-0442
dduran@cesareinc.com

IMPROVEMENT SURVEY PLAT
CCS CONSULTANTS
4860 Robb Street, Suite 101
Wheat Ridge, CO 80033
P: (303) 403-4706
F: (303) 403-0800

INTERIOR DESIGNER:
Bloom Studio, LLC
13538 Raritan Way, Suite 101
Westminster, CO 80234
Heather Portillo, Principal
P: (720) 328-1366
heather@bloomstudiollc.com

PROJECT SUMMARY

BUILDING INFORMATION

BUILDING JURISDICTION: CITY OF BLACK HAWK, COLORADO

BUILDING CODE: IRC, IECC & IEBC 2012

LEGAL DESCRIPTION: THE EAST HALF OF LOT 25 AND THE WEST 8 FEET OF LOT 24, BLOCK 24, BASED UPON THE SURVEY MAP OF BLOCK 24, OF THE MAP OF BLACK HAWK, SURVEYED BY ALBERT JOHNSON CITY SURVEYOR, DATED MAY AND JUNE 1866, CITY OF BLACK HAWK, COUNTY OF GILPIN, STATE OF COLORADO, MORE PARTICULARLY DESCRIBED AS FOLLOWS: COMMENCING AT THE NORTHERLY ANGLE POINT OF SAID LOT 24, BLOCK 24, THENCE ALONG SAID NORTHERLY LINE S 51°35'24" W, 39.77 FEET TO THE TRUE POINT OF BEGINNING, WITH ALL BEARINGS CONTAINED HEREIN RELATIVE THERETO; THENCE S 38°24'36" E, 100.00 FEET; THENCE S 51°35'24" W, 43.66 FEET; THENCE N 38°24'36" W, 100.00 FEET; THENCE N 51°35'24" E, 43.66 FEET TO THE TRUE POINT OF BEGINNING, CONTAINING 0.10 ACRES MORE OR LESS.

BUILDING SETBACKS:	AS-IS	
BUILDING HEIGHT:	26'-8"	26'-8"
BUILDING AREA:	EXISTING:	PROPOSED:
FIRST FLOOR:	749 SF	769 SF
SECOND FLOOR:	348 SF	348 SF
TOTAL:	1,097 SF	1,117 SF
PORCH:		
DECK 1: (HISTORIC)	101 SF	107 SF
DECK 2: (NON-HISTORIC)	278 SF	307 SF
LOWER SHED: (NON-HISTORIC)	43 SF	43 SF
UPPER SHED: (HISTORIC)	46 SF	19 SF
SITE: TOTAL AREA:	4,366 SF	4,366 SF
LOT INFORMATION:	AS-IS	AS-IS

ABBREVIATIONS KEY

A.C. = ABOVE COUNTER
APPROX. = APPROXIMATELY
BTWN = BETWEEN
CONC. = CONCRETE
CONT. = CONTINUOUS
C.I. = CONTINUOUS INSULATION
DEMO = DEMOLISH
DIA. = DIAMETER
DH = DOUBLE HUNG
D.S. = DOWNSPOUT
EA. = EACH
EM = ELECTRIC METER
EP = ELECTRIC PANEL
(E) = EXISTING
ELEC. = ELECTRIC
F.D. = FLOOR DRAIN
F.F. = FINISHED FLOOR
FG = FIBERGLASS BATT
FND. = FOUNDATION
GA. = GAUGE
G.C. = GENERAL CONTRACTOR
G.I. = GALVANIZED IRON
GM = GAS METER
GYP. BD. = GYPSUM BOARD
H.B. = HOSE BIB
HORIZ = HORIZONTAL
HT. = HEIGHT
I.G.U. = INSULATED GLASS UNIT
MIN. = MINIMUM
MFR. = MANUFACTURER
(N) = NEW
O.C. = ON CENTER
PNT. = PAINT
P.T. = PRESSURE TREATED
RE: = REFERENCE
REF. = REFRIGERATOR
REQ'D = REQUIRED
R.O. = ROUGH OPENING
SIM. = SIMILAR
S&R = SHELF AND ROD
SQ. = SQUARE
#S = NUMBER OF SHELVES
T = TELEPHONE
T&G = TONGUE AND GROOVE
T.O.W. = TOP OF WALL
TC = TRASH COMPACTOR
TYP. = TYPICAL
U.N.O. = UNLESS NOTED OTHERWISE
VERT = VERTICAL
WRB = WEATHER RESISTIVE BARRIER

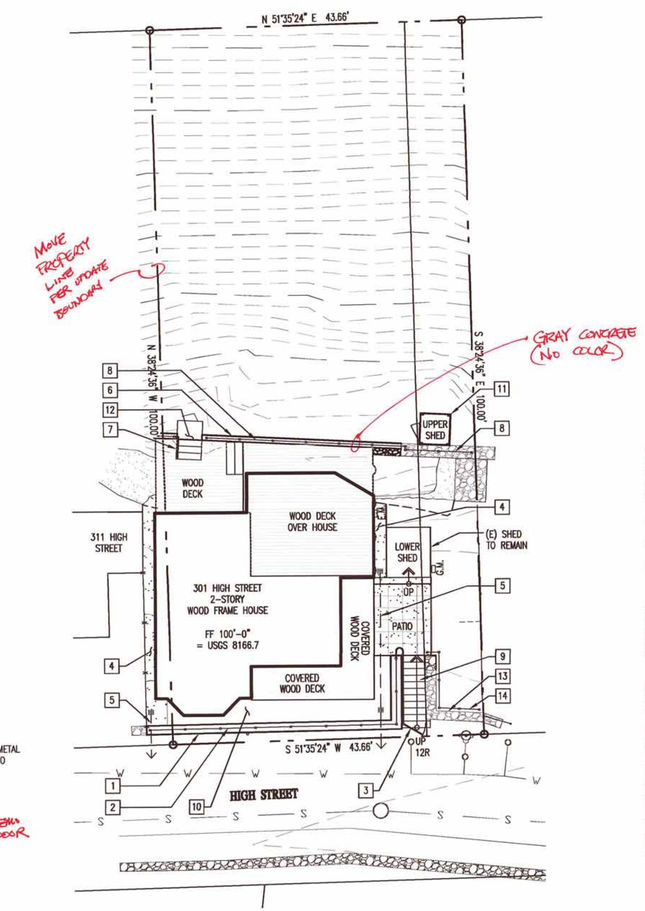

1 SITE PLAN
1" = 10'-0"

0 5 10

NOTE: SURVEY PROVIDED BY CCS CONSULTANTS

SITE- GENERAL NOTES:

1. FIELD VERIFY ALL DIMENSIONS PRIOR TO CONSTRUCTION.
2. REFER TO CIVIL SITE PLAN FOR ADDITIONAL INFORMATION.
3. RESTORE ALL DISTURBED GRADING. PROVIDE EROSION CONTROL MATS. SEED WITH LOW WATER DEMAND NATIVE GRASS MIX, RE: CIVIL.
4. CONTOUR LINES ARE REPRESENTATIVE OF (E) CONDITIONS. (N) CONTOURS ARE PROVIDED ON CIVIL DRAWINGS.
5. GENERAL SLOPE OF SITE PLAN SHOWN FOR REFERENCE, RE: CIVIL DRAWINGS FOR SITE IMPROVEMENTS BEYOND FOOTING OF THE BUILDING.
6. COORDINATE TOP, BOTTOM, AND FLOW LINE ELEVATIONS OF CONCRETE SWALES WITH CIVIL ENGINEER.

SITE- KEY NOTES:

1. REPLACE STONE RETAINING WALL ALONG HIGH STREET
2. DEMO (E) WIRE AND STEEL GUARDRAIL AT TOP OF STONE RETAINING WALL AND REPLACE W/ (N) ORNAMENTAL METAL GUARDRAIL (SALVAGE WIRE FENCING, GOTHIC FINIAL, AND RACHETING EQUIPMENT)
3. 3'-0" WIDE ORNAMENTAL METAL GATE
4. INSTALL (N) 4" THICK CONC. SWALE SLOPED 5% MIN. TO 8"X8" CAST IRON AREA DRAIN THAT CONNECTS TO UNDERGROUND DRAINAGE PIPE
5. UNDERGROUND DRAINAGE PIPE TO DAYLIGHT AT RETAINING WALL
6. REPLACE METAL PIPE RETAINING WALL W/ RETAINING WALL
7. REPLACE STAIR TO REAR PROPERTY W/ WOOD FRAME AND WOOD TREADS
8. (N) WIRE AND STEEL GUARDRAIL, RE: 5/A000
9. (N) CONC. STAIR W/ METAL HANDRAIL
10. ~~(N) LANDSCAPE ROCK WALKWAY~~ SEED W/ GRASS
11. (E) SHED AND OUTHOUSE: (RE: 2/A000)
    - STRUCTURALLY STABILIZE
    - REPLACE ROOFING
    - REPLACE WOOD SIDING TO MATCH HOUSE. RE-HANG DOOR
    - INFILL WINDOW OPENING W/ GLASS
    - DEMO CORRUGATED METAL LEAN-TO
12. (N) 3'-6"x3'-0" CONC. LANDING
13. REPAIR (E) STONE RETAINING WALL
14. (N) ORNAMENTAL METAL GUARDRAIL. HOLD POSTS BACK FROM (E) STONE RETAINING WALL APPROX. 4"-8"

SHEET INDEX

SHEET NUMBER	SHEET TITLE
A000	COVER SHEET AND SITE PLAN
SURVEY	
	TOPOGRAPHIC SURVEY
AS-BUILTS	
AB200	AB FLOOR PLANS
AB400	AB BUILDING SECTIONS
CIVIL	
C100	GENERAL NOTES & SCHEDULE OF VALUES
C200	GRADING, DRAINAGE & UTILITY PLAN
C300	SITE DETAILS
C301	SITE DETAILS
ARCHITECTURAL	
A200	DEMO FLOOR PLANS AND ROOF PLANS
A201	FLOOR PLANS AND ROOF PLANS
A300	EXTERIOR ELEVATIONS
A400	BUILDING SECTIONS
A401	WALL SECTIONS
A600	INTERIOR ELEVATIONS
A800	WINDOW DETAILS & SCHEDULES
STRUCTURAL	
S200	FOUNDATION & FIRST FLOOR PLAN & GENERAL NOTES
S201	FLOOR & ROOF FRAMING PLANS
S400	SECTIONS
MECHANICAL AND PLUMBING	
M101	MECHANICAL FIRST FLOOR
P101	PLUMBING FIRST FLOOR
MP400	MECHANICAL SPECS
MP401	MECHANICAL DETAILS AND SCHEDULES
MP402	MECHANICAL PIPING DIAGRAM
ELECTRICAL	
E100	ELECTRICAL SITE PLAN, ONE-LINE AND SCHEDULES
E200	ELECTRICAL LIGHTING AND POWER PLANS

CODE ANALYSIS

HISTORIC BUILDING

PER IEBC SECTION 201, THE PROPERTY IS A HISTORIC BUILDING CERTIFIED AS A CONTRIBUTING RESOURCE WITHIN A LOCALLY DESIGNATED HISTORIC DISTRICT.

EGRESS WINDOW

PER R104.10 ADMINISTRATIVE REVIEW HAS APPROVED THE REUSE OF (E) NON-HISTORIC WINDOW OPENINGS FOR EGRESS WITH INSTALLATION OF NEW NON-HISTORIC WINDOWS X/X/2014.

MEANS OF EGRESS STAIRS

PER 1003.9 THE EXISTING GRAND STAIRWAY AND RAILING WILL REMAIN AND SHALL BE ACCEPTED AS NON-COMPLIANT.

IECC COMPLIANCE

2012 IECC MINIMUM REQUIREMENTS AS FOLLOWS:

CLIMATE ZONE: 5B

EXTERIOR WALL: R-20 OR R-13+5 C.I.

ROOF/CEILING: R-49

FLOOR: R-30

SLAB FLOOR: R-10, 2FT DEPTH

CRAWLSPACE WALL: R-15 C.I.

BASEMENT WALL: R-15

WINDOW/GLAZING: U-VALUE - 0.32

SKYLIGHT: U-VALUE - 0.55

D.D. REVIEW 11/10/14
JESSICA, CINDY, DEAN, LLOYD, TINA, TERI, NATHAN
Lloyd Larsen

NO.	DATE	REVISION
4.	11/04/14	DESIGN DEVELOPMENT SUBMISSION
3.	10/01/14	SCHEMATIC DESIGN SUBMISSION
2.	08/22/14	CONCEPT FLOOR PLANS
1.	08/20/14	AS-BUILT DRAWINGS

PEH ARCHITECTS
1319 Spruce Street Suite 207
Boulder, CO 80302
303-442-0408, fax: 303-447-1905
e-mail: peheinz@peharchitects.com

301 HIGH STREET REHABILITATION

301 High Street, Black Hawk, CO 80422

SHEET TITLE
COVER SHEET

PROJECT:	2014.30
DATE:	08/07/14
DRAWN BY:	TCF
CHECKED BY:	PEH

SHEET NUMBER
A000

PEH OFFICE COPY

\2014.30\DWGs\301 high street\Sheets\A000 Cover Sheet.dwg, 11/4/2014 3:19:19 PM

TOPOGRAPHIC MAP OF

A PORTION OF LOTS 24 AND 25, BLOCK 24
CITY OF BLACK HAWK COUNTY OF GILPIN
STATE OF COLORADO

C.C.S. CONSULTANTS, INC.
4860 Robb Street, Suite 206
Wheat Ridge, Colorado 80033
Phone: 303-403-4706, Fax: 303-403-0800

PROJECT NO.: CCS-BLH\90BLH24\MASTER LOTS 24-25 BLOCK 24-<TOPOGRAPHIC MAP>

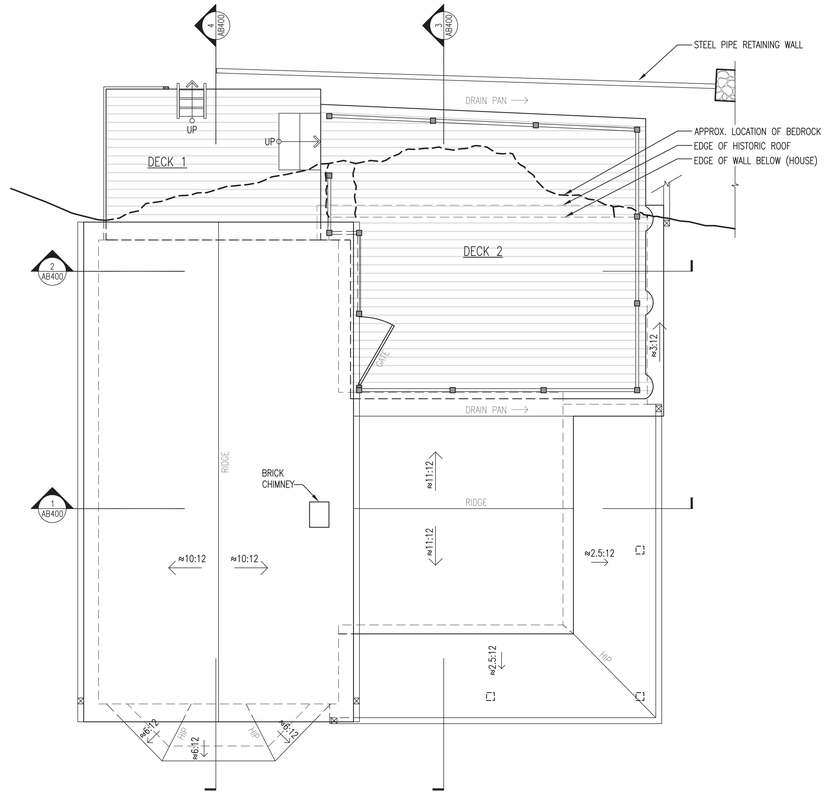

3 AB ROOF PLAN
1/4" = 1'-0"

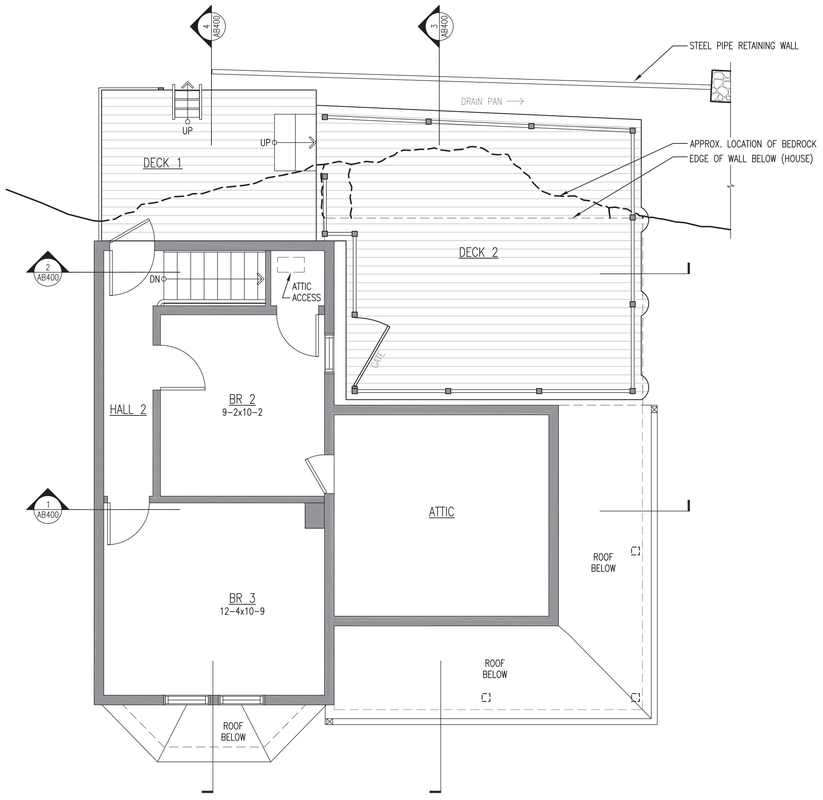

2 AB SECOND FLOOR PLAN
1/4" = 1'-0"

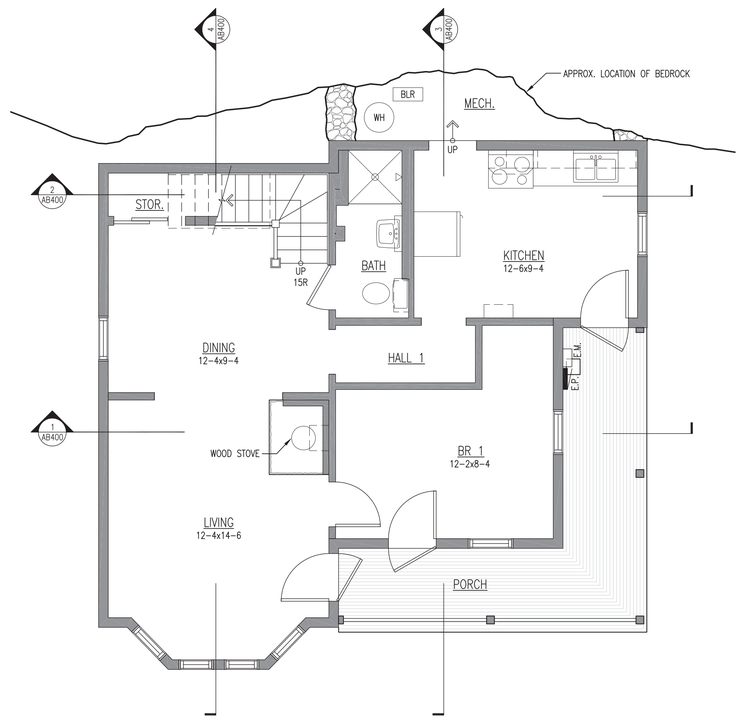

1 AB FIRST FLOOR PLAN
1/4" = 1'-0"

0 2 4

NO.	DATE	REVISION
4.	11/04/14	DESIGN DEVELOPMENT SUBMISSION
3.	10/01/14	SCHEMATIC DESIGN SUBMISSION
2.	08/22/14	CONCEPT FLOOR PLANS
1.	08/20/14	AS-BUILT DRAWINGS

PEH ARCHITECTS
1319 Spruce Street Suite 207
Boulder, CO 80302
303-442-0408, fax: 303-447-1905
e-mail: peheinz@peharchitects.com

301 HIGH STREET REHABILITATION

301 High Street, Black Hawk, CO 80422

SHEET TITLE
AS-BUILT FLOOR PLANS

PROJECT: 2014.30
DATE: 08/07/14
DRAWN BY: TCF
CHECKED BY: PEH

SHEET NUMBER
AB200

F:\2014.30\DWGs\301 high street\Sheets\AB200 As-Built Floor Plans.dwg, 11/4/2014 3:11:36 PM

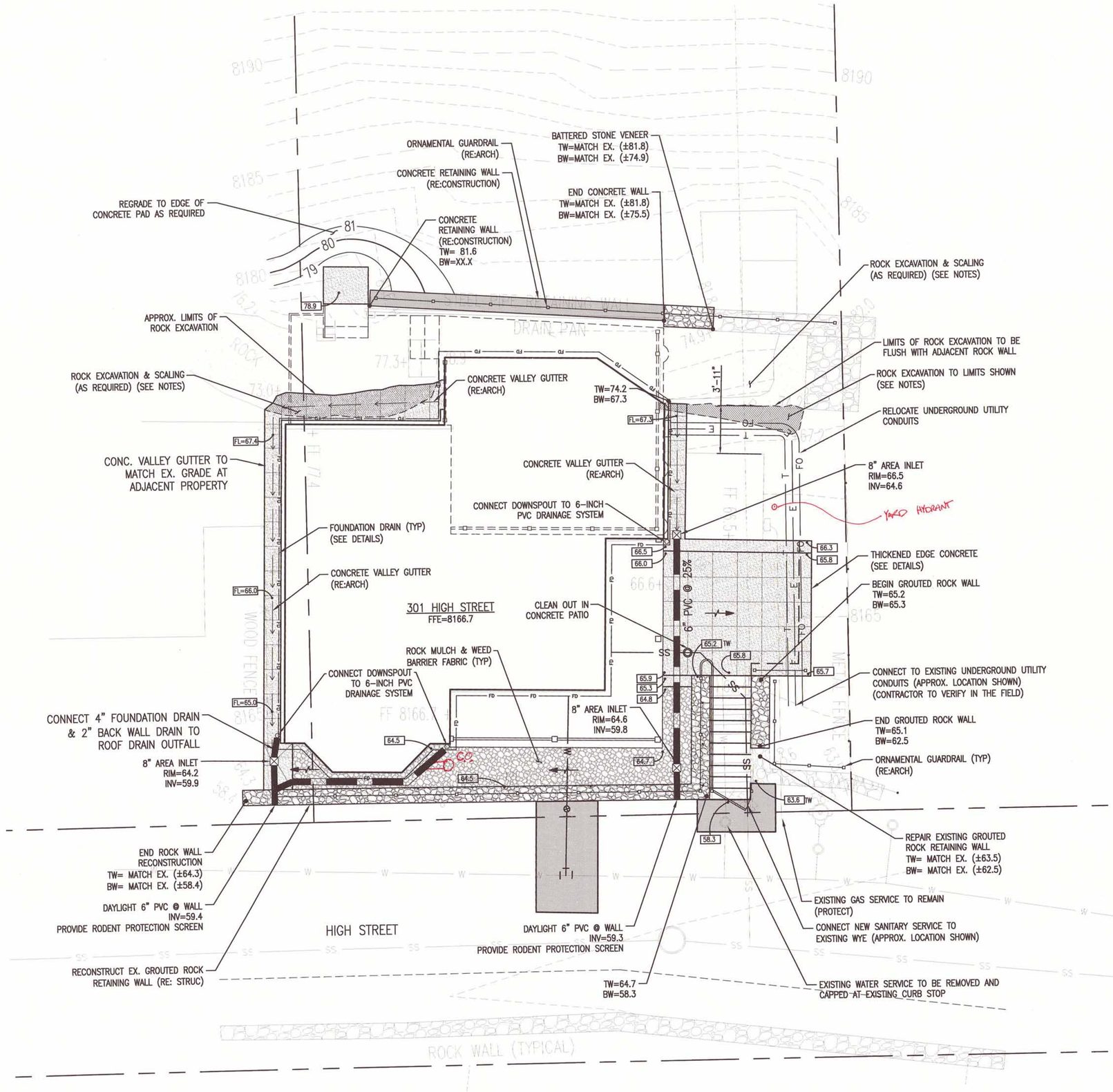

NOTES

1. CONTRACTOR MUST INCLUDE IN THEIR PROPOSAL ANY NECESSARY ROCK EXCAVATION ASSOCIATED WITH FOUNDATIONS, RETAINING WALLS, AND PIPE INSTALLATION & SITE WORK. THE CONTRACTOR SHALL BECOME FAMILIAR WITH THE GEOTECHNICAL REPORT PROVIDED BY THE CITY/OWNER. ROCK EXCAVATION IS DEFINED AS ANY WORK THAT A BACKHOE CANNOT DIG AND A HYDRAULIC HAMMER IS REQUIRED TO BE BROUGHT TO THE SITE TO BREAK ROCK. SEE SHEET C100 FOR FURTHER INFORMATION.

2. EXISTING BEDROCK TO BE EXCAVATED FOR GROUTED ROCK RETAINING WALLS SHALL BE DONE IN A MANNER IN WHICH THE BEDROCK REMAINS COMPETENT AND SUITABLE FOR STRUCTURAL WALL BEARING.

3. 6-INCH PVC ROOF DRAINAGE SYSTEM SHALL HAVE 12 INCHES OF COVER (MIN.) IN ALL UNPAVED AREAS. WHERE DRAIN IS BELOW CONC. OR ASPHALT, 8 INCHES OF COVER TO TOP OF CONC. IS ACCEPTABLE.

4. ALL DISTURBED, UNPAVED AREAS SHALL RECEIVE 4 INCHES OF TOPSOIL, SEED & MULCH. ON SLOPES 3:1 OR GREATER, AN APPROVED STRAW/COCONUT EROSION CONTROL MAT SHALL BE INSTALLED IN LIEU OF MULCH. EROSION CONTROL MAT SHALL BE INCLUDED IN THE COST OF THE WORK AND WILL NOT BE PAID FOR SEPARATELY. MULCH SHALL CONSIST OF WEED FREE FIELD OR MARSH HAY OR STRAW OF OATS, BARLEY, WHEAT, RYE OR TRITICALE, AND APPROVED BY THE CITY OF BLACK HAWK PRIOR TO PLACEMENT (SUBMIT FOR APPROVAL). SOIL RETENTION BLANKET SHALL BE A MACHINE PRODUCED MAT CONSISTING OF 70% AGRICULTURAL STRAW (0.35 LB/SY) & 30% COCONUT FIBER (0.15 LB/SY). THE BLANKET SHALL BE COVERED W/ POLYPROPYLENE NETTING HAVING AN APPROXIMATE $\frac{5}{8}$ IN. x $\frac{5}{8}$ IN. MESH ON THE TOP AND BOTTOM, AND BE SEWN TOGETHER WITH COTTON, BIODEGRADABLE OR PHOTODEGRADABLE THREAD. SOIL RETENTION BLANKET SHALL BE SECURED W/ PINS AND STAPLES (8" MIN.) INTO THE TOPSOIL AFTER SEEDING.

5. THE CITY WILL BE RESPONSIBLE FOR XCEL ENERGY COSTS ASSOCIATED WITH ANY POWER & GAS SERVICE RELOCATIONS THAT ARE NECESSARY. THE CONTRACTOR IS RESPONSIBLE FOR CONTACTING XCEL AND COORDINATING ALL UTILITY WORK. THE CONTRACTOR IS RESPONSIBLE FOR TEMPORARY POWER SERVICE NEEDS DURING CONSTRUCTION. REFER TO THE PAY ITEMS FOR FURTHER INFORMATION.

6. EXISTING CABLE, & TELEPHONE SERVICES SHALL BE RE ROUTED FROM THE APPROXIMATE EXISTING CONDUIT LOCATIONS BEHIND THE EXISTING WALLS TO THE LOCATIONS SHOWN ON THE PLANS (RE: MECH). 2-INCH PVC PIPE CONDUITS SHALL BE USED UNLESS OTHERWISE APPROVED BY THE SERVICE PROVIDER. CONDUIT SHALL BE INSTALLED MINIMUM OF 30 INCHES BELOW FINISHED GRADE. THE CONTRACTOR SHALL COORDINATE WITH THE SERVICE PROVIDERS FOR APPROPRIATE CONDUIT SIZES, MATERIALS, AND LOCATIONS. TIME AND MATERIALS REQUIRED FOR COORDINATION SHALL BE INCLUDED IN THE COST OF THE WORK AND WILL NOT BE PAID FOR SEPARATELY. CONTACT BARRY KISSELMAN WITH USA COMMUNICATIONS FOR TELEPHONE SERVICE COORDINATION AT (303) 253-5106, AND DAN LEWIS AT CENTURY LINK FOR CABLE SERVICE AT (303) 441-6021 FOR ALL COORDINATION NEEDS.

10. ROCK SCALING AND/OR EXCAVATION WILL BE REQUIRED FOR THIS PROJECT. SCALING AND EXCAVATION SHOWN ON THIS PLAN SHALL BE COORDINATED WITH THE CITY OF BLACK HAWK, THE PROJECT OWNER, AND THE GEOTECHNICAL ENGINEER AT LEAST 1 WEEK PRIOR TO THE EXPECTED DAY OF SCALING. THE GEOTECHNICAL ENGINEER SHALL BE PRESENT DURING SCALING, AND WILL DIRECT THE CONTRACTOR AS TO WHAT ROCKS SHALL BE SCALED ON THE JOB SITE TO ACHIEVE THE EXCAVATION LIMITS AS SHOWN ON THE DRAWINGS. IT IS ESTIMATED THAT 16 TO 24 HOURS OF SCALING WILL BE REQUIRED ON THIS PROJECT.

11. THE EXISTING SANITARY SERVICE SHALL BE REMOVED FROM THE HOME TO THE EXISTING WYE LOCATED BELOW GRADE AT THE BASE OF THE STAIRS (ELEVATION UNKNOWN) AND A NEW SERVICE SHALL BE INSTALLED AT THE LOCATION SHOWN ON THE PLANS AND CONNECT TO THE PROPOSED INTERIOR PLUMBING (RE: MECH).

LEGEND

- W — EXISTING POTABLE WATER
- SS — EXISTING SANITARY SEWER
- EXISTING PROPERTY BOUNDARY
- X — EXISTING FENCES
- EXISTING STONE WALL
- PROPOSED STONE WALL (REPAIR OR NEW)
- PROPOSED 6" PVC DRAIN PIPE W/ INLET
- 84.24 — PROPOSED SPOT ELEVATION
- DIRECTION OF OVERLAND FLOW
- G — PROPOSED GAS SERVICE
- E — PROPOSED UNDERGROUND UTILITY CONDUIT
- FO
- SS — PROPOSED SANITARY SEWER SERVICE W/ CLEANOUT
- W — PROPOSED WATER SERVICE
- G — PROPOSED GAS SERVICE
- FD — PROPOSED 4" FOUNDATION DRAIN

0 5 10
SCALE: 1" = 5'

NO.	DATE	REVISION
4.	11/04/14	DESIGN DEVELOPMENT SUBMISSION
3.	10/01/14	SCHEMATIC DESIGN SUBMISSION
2.	08/22/14	CONCEPT FLOOR PLANS
1.	08/20/14	AS-BUILT DRAWINGS

PEH ARCHITECTS
1319 Spruce Street Suite 207
Boulder, CO 80302
303-442-0408, fax: 303-447-1905
e-mail: peheinz@peharchitects.com

301 HIGH STREET REHABILITATION

301 High Street, Black Hawk, CO 80422

Loris and Associates, Inc.
818 W. South Boulder Rd. #200
Louisville, Colorado 80027
303.444.2073

SHEET TITLE
GRADING, DRAINAGE, & UTILITY PLAN

PROJECT: 2014.30
DATE: 08/07/14
DRAWN BY: KFD
CHECKED BY: PJL

SHEET NUMBER
C200

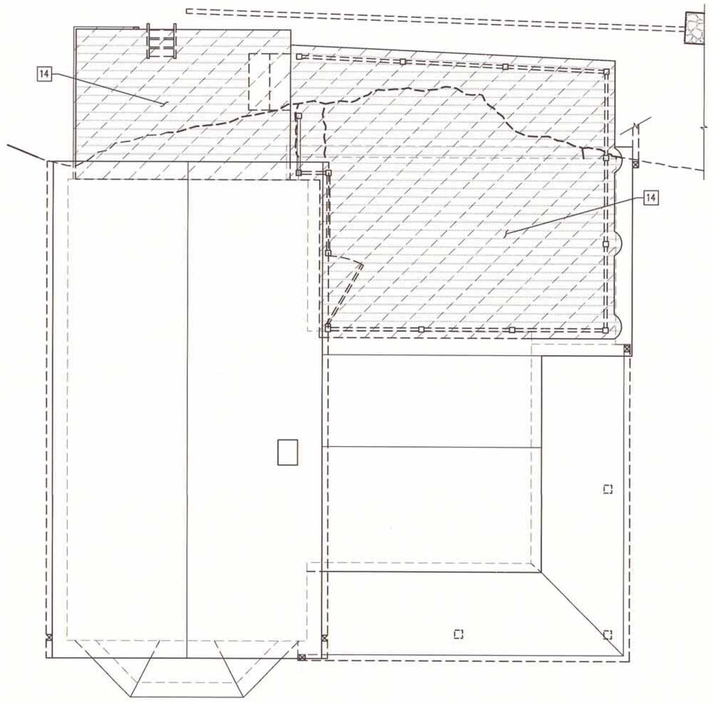

4 ROOF PLAN
1/4" = 1'-0"

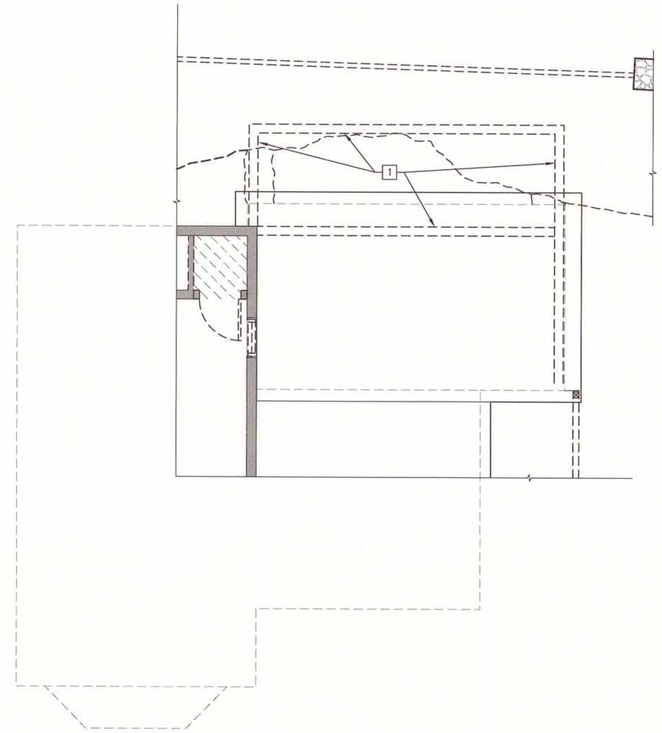

3 ROOF PLAN UNDER DECK 2
1/4" = 1'-0"

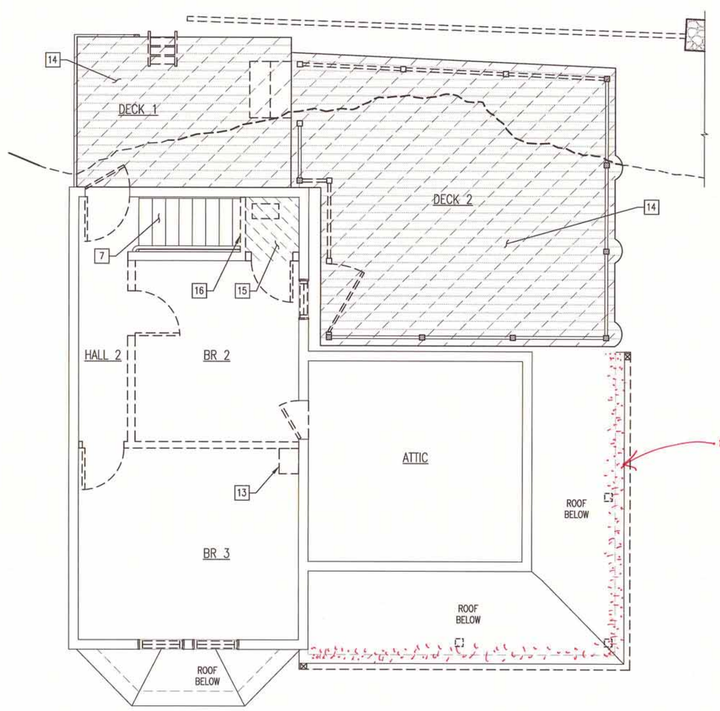

RETAIN SOFFIT, FASCIA AND ~~[illegible]~~ GINGERBREAD BETWEEN POSTS.

2 SECOND FLOOR PLAN
1/4" = 1'-0"

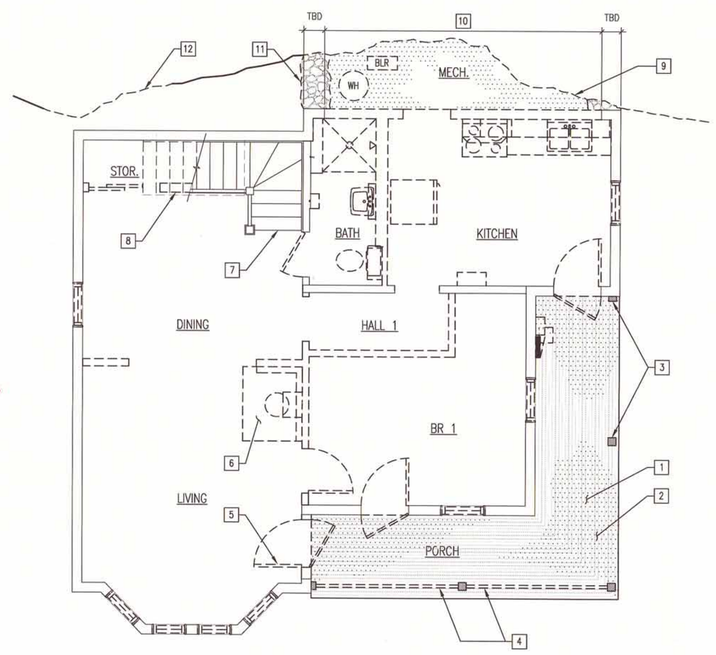

OWNER TO IDENTIFY A LIST OF INTERIOR MATERIALS THAT ARE TO BE SALVAGED. SALVAGED MATERIALS ARE FOR OWNER TO KEEP... NOT NECESSARILY FOR REUSE IN THE HOUSE.

- DOOR HARDWARE
- TRANSOM HARDWARE
- STORM DOORS

1 FIRST FLOOR PLAN
1/4" = 1'-0"

0 2 4

(E) FRAME WALL

BUILDING ELEMENT TO BE DEMOLISHED/REMOVED

DEMOLITION CONTRACTOR

G.C. IS ENCOURAGED TO CAREFULLY REMOVE SERVICEABLE PLUMBING AND ELECTRICAL FIXTURES, DOORS, HARDWARE AND OTHER REUSABLE ITEMS, AND PROVIDE TO SALVAGE RESALE CENTERS. SOME CENTERS WILL REMOVE FREE OF CHARGE.

RESOURCE, BOULDER, CO
303-419-5418

HABITAT FOR HUMANITY
303-454-8965

DEMO ROOF PLAN- GENERAL NOTES:

1. DEMO GUTTERS AND DOWNSPOUTS.
2. DEMO ROOF PENETRATIONS FOR PLUMBING AND MECHANICAL.
3. DEMO ROOFING MATERIAL DOWN TO SHEATHING.

DEMO ROOF PLAN- KEY NOTES:

1. DEMO FRAME WALLS THAT ENCLOSE MECHANCIAL ROOM TO FACE OF HILLSIDE, INCLUDING CRIPPLE WALLS BUILT ON HISTORIC ROOF
2. HATCH INDICATES EXTENT OF FULL DEMO OF DECK, FRAMING, AND GUARDRAILS

DEMO FLOOR PLAN- GENERAL NOTES:

1. DARK DASH LINES INDICATE AREAS OF DEMOLITION.
2. DEMO ALL CABINETRY, COUNTERTOPS, BUILT-INS, SHELVING AND MILLWORK.
3. DEMO ALL TRIM, WALL AND CEILING FINISHES TO EXPOSE WALL/CEILING/ROOF FRAMING (INCLUDES DEMO OF INT. WOOD PLANK SHEATHING).
4. DEMO ALL FLOOR, WALL, CEILING AND ROOF INSULATION.
5. DEMO ALL FLOOR FINISHES AND SUBFLOOR TO EXPOSE FLOOR FRAMING AND CRAWL SPACE.
6. DEMO ALL ELECTRICAL, CABLE, AND PHONE WIRING AND FIXTURES. COORDINATE SHUT-OFF OF ELECTRICAL SERVICE PRIOR TO DEMO.
7. DEMO WATER HEATER.
8. DEMO ALL PLUMBING PIPING AND FIXTURES FOR WATER, SEWER, HEATING AND GAS. COORDINATE SHUT-OFF OF WATER AND GAS SERVICE PRIOR TO DEMO. CAP ALL PLUMBING SERVICE LINES WITHIN 5'-0" OF ENTRANCE INTO STRUCTURE. LABEL ALL CAPPED SERVICE LINES.
9. DEMO EXISTING WINDOWS.
10. DEMO EXTERIOR SIDING, TRIM, FASCIA, AND SOFFITS U.N.O.
11. DEMO ALL INTERIOR AND EXTERIOR DOORS, FRAMES, AND THRESHOLDS.
12. DEMO BOILER, HYDRONIC BASEBOARD PIPING, AND ASSOCIATED HEATING SYSTEM.
13. DEMO FOUNDATION.

DEMO FLOOR PLAN- KEY NOTES:

1. DEMO PORCH DECKING AND SKIRT BOARD
2. DEMO PORCH BEADBOARD CEILING. FRAMING TO REMAIN
3. PORCH POSTS AND GINGERBREAD TO REMAIN
4. DEMO NON-HISTORIC GUARDRAIL (PORCH POSTS TO REMAIN)
5. ENLARGE DOOR OPENING FOR (N) WIDER DOOR
6. DEMO WOOD STOVE, SURROUNDING BRICK WALLS, AND CONC./STONE HEARTH
7. (E) TREADS, RISERS, AND RAILING TO REMAIN
8. DEMO PORTION OF WALL BELOW STAIR
9. EXCAVATE BEDROCK AS REQ'D TO INSTALL (N) CONC. RETAINING WALL
10. DEMO PORTION OF FRAME WALL. SUPPORT ROOF RAFTERS W/ (N) BEAM
11. DEMO STONE AND FRAME END WALLS TO MECH. ROOM
12. EXCAVATE BEDROCK AS REQ'D FOR FND INSTALL AND PROVIDE MIN. 18" WIDE SWALE
13. (E) CHIMNEY TO REMAIN ABOVE ROOF. DEMO AND SUPPORT CHIMNEY ABOVE CEILING JOISTS
14. HATCH INDICATES EXTENT OF FULL DEMO OF DECK, FRAMING, AND GUARDRAILS
15. DEMO CLOSET FLOOR AND FRAMING
16. DEMO WALL

NO.	DATE	REVISION
4.	11/04/14	DESIGN DEVELOPMENT SUBMISSION
3.	10/01/14	SCHEMATIC DESIGN SUBMISSION
2.	08/22/14	CONCEPT FLOOR PLANS
1.	08/20/14	AS-BUILT DRAWINGS

PEH ARCHITECTS
1319 Spruce Street Suite 207
Boulder, CO 80302
303-442-0408, fax: 303-447-1905
e-mail: peheinz@peharchitects.com

301 HIGH STREET REHABILITATION

301 High Street, Black Hawk, CO 80422

SHEET TITLE
DEMO FLOOR PLANS AND ROOF PLANS

PROJECT: 2014.30
DATE: 08/07/14
DRAWN BY: TCF
CHECKED BY: PEH

SHEET NUMBER
A200

F:\2014.30\DWGs\301 high street\Sheets\A200 Demo Floor Plans and Roof Plans.dwg, 11/3/2014 10:13:16 AM

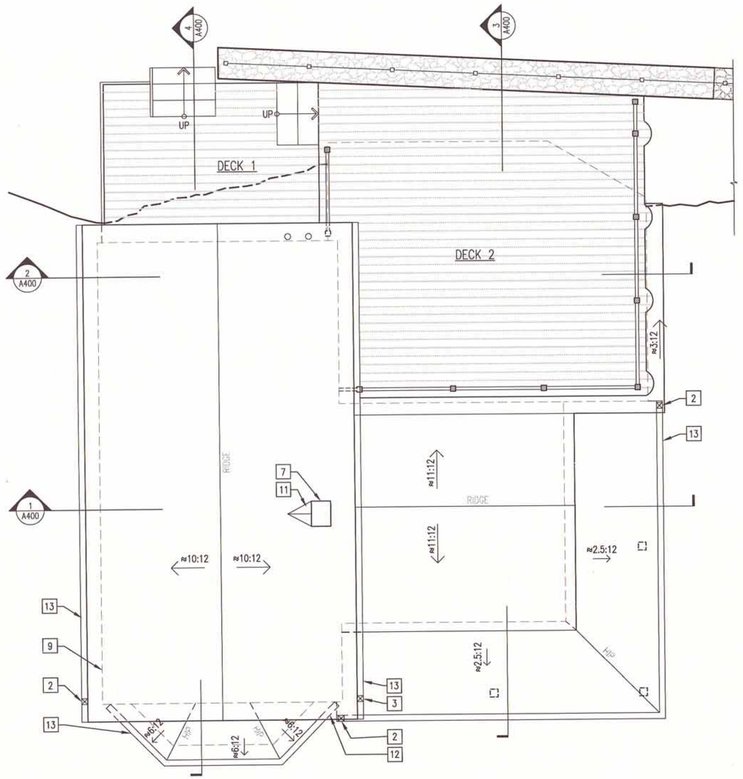

4 ROOF PLAN
1/4" = 1'-0"

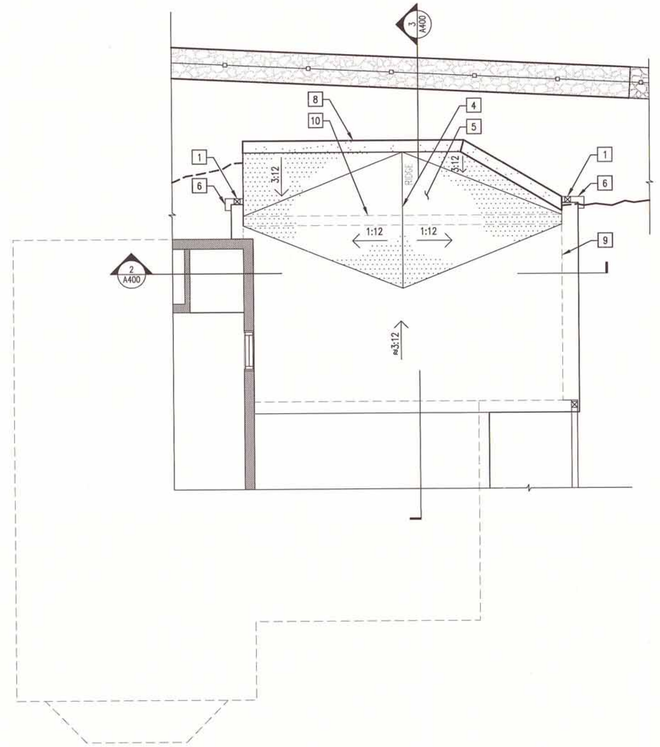

3 ROOF PLAN UNDER DECK 2
1/4" = 1'-0"

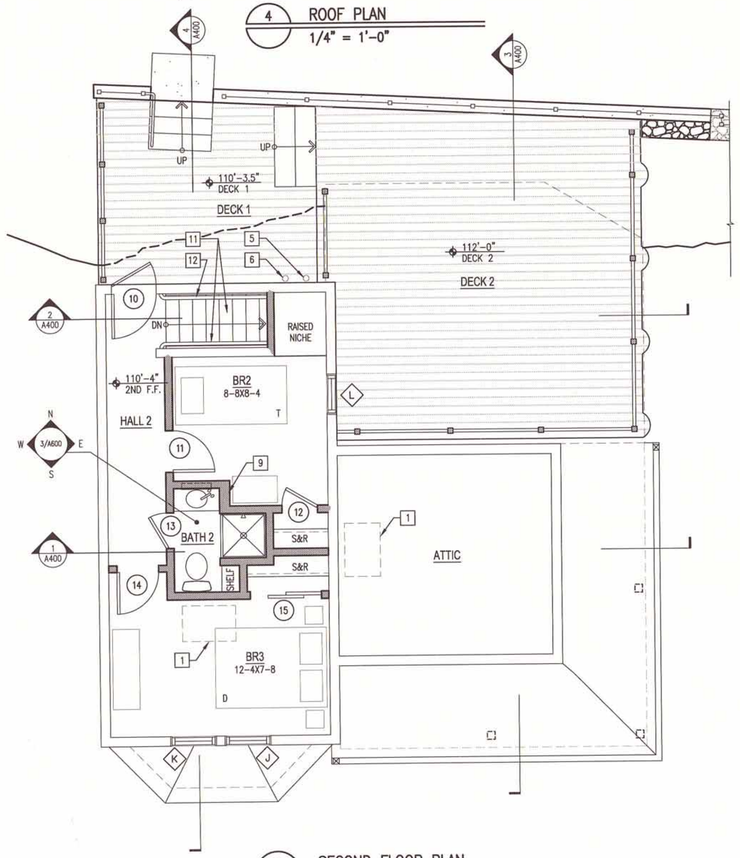

2 SECOND FLOOR PLAN
1/4" = 1'-0"

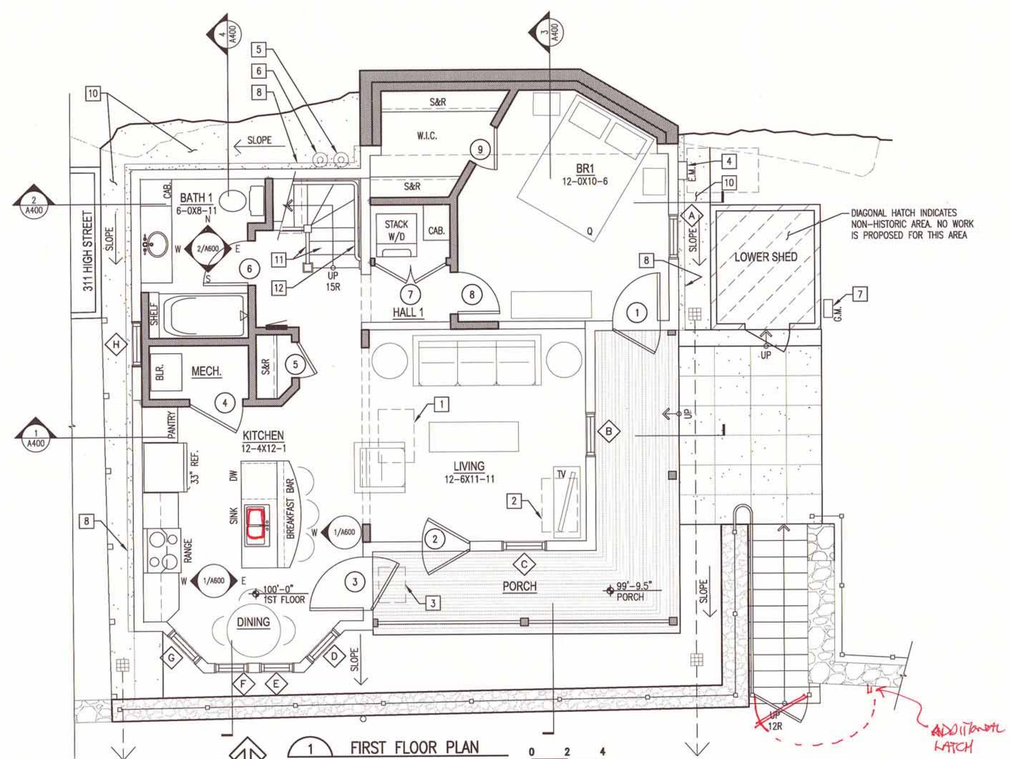

1 FIRST FLOOR PLAN
1/4" = 1'-0"
0 2 4

ROOF PLAN- GENERAL NOTES:

1. NEW GUTTERS AND DOWNSPOUTS PER PLAN.
2. SISTER/REPLACE DAMAGED ROOF RAFTERS.
3. NEW ASPHALT SHINGLES OVER ROOFING PAPER W/ ICE AND WATER SHIELD 3'-0" UP FROM EAVE, U.N.O.
4. ROOF VENTILATION NOT REQ'D, ATTIC TO BE CONDITIONED.

ROOF PLAN- KEY NOTES:

1. DOWNSPOUT TO (N) CONC. SWALE
2. DOWNSPOUT TO UNDERGROUND DRAIN
3. DOWNSPOUT TO ROOF BELOW
4. LOW SLOPE ROOF CRICKET W/ MEMBRANE ROOFING
5. HATCH AREA INDICATES (N) ROOFING AND ROOF FRAMING AT REAR OF HOUSE
6. SCUPPER
7. REPAIR (E) BRICK CHIMNEY. REINFORCE BASE OF BRICK CHIMNEY ABOVE CEILING FRAMING
8. CONC. RETAINING WALL
9. EDGE OF WALL BELOW (HOUSE)
10. EDGE OF DEMOLISHED WALL BELOW (AS-BUILT CONDITIONS OF HOUSE) SHOWN FOR REFERENCE
11. CRICKET AT CHIMNEY
12. DOWNSPOUT AT BAY WINDOW TO CONNECT W/ WYE CONNECTION TO PORCH ROOF DOWNSPOUT.
13. GUTTER, TYP. AT ALL EAVES

FLOOR PLAN- GENERAL NOTES:

1. LEVEL FLOOR FRAMING.
2. ALL SHADED WALLS ARE NEW, SEE SYSTEM NOTES FOR CONSTRUCTION.
3. FINISHED FLOOR 100'-0" = 8166.7 USGS.

FLOOR PLAN- KEY NOTES:

1. 24"x36" ATTIC ACCESS (22"x30" MIN. CLEAR OPENING)
2. 24"x36" CRAWL SPACE ACCESS (18"x24" MIN. CLEAR OPENING)
3. 18"x24" MIN. CLEAR UNDER PORCH FLOOR ACCESS
4. RELOCATED ELEC. METER W/ UNDERGROUND SERVICE. PROVIDE 30"x40" CLEAR WORK SPACE
5. RADON EXHAUST
6. CRAWL SPACE EXHAUST
7. GAS METER
8. RAISED CONC. CURB
9. 2"x6" WALL FOR FLUE PIPES
10. 4" THICK CONC. SWALE, SLOPE 5% MIN. TO 8"x8" CAST IRON AREA DRAIN THAT CONNECTS TO UNDERGROUND DRAINAGE PIPE
11. (E) STAIR FRAMING, TREADS, RISERS, TRIM AND GUARDRAIL TO REMAIN
12. (N) HANDRAIL

NO.	DATE	REVISION
4.	11/04/14	DESIGN DEVELOPMENT SUBMISSION
3.	10/01/14	SCHEMATIC DESIGN SUBMISSION
2.	08/22/14	CONCEPT FLOOR PLANS
1.	08/20/14	AS-BUILT DRAWINGS

PEH ARCHITECTS
1319 Spruce Street Suite 207
Boulder, CO 80302
303-442-0408, fax: 303-447-1905
e-mail: peheinz@peharchitects.com

301 HIGH STREET REHABILITATION

301 High Street, Black Hawk, CO 80422

SHEET TITLE
FLOOR PLANS AND ROOF PLANS

PROJECT: 2014.30
DATE: 08/07/14
DRAWN BY: TCF
CHECKED BY: PEH

SHEET NUMBER
A201

2014.30\DWGs\301 high street\Sheets\A201 FLOOR PLAN, ROOF PLAN, AND SCHEDULES.dwg,
11/3/2014 10:59:19 AM

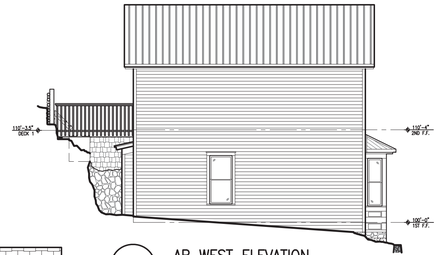

AB WEST ELEVATION
1/8" = 1'-0"

AB NORTH ELEVATION
1/8" = 1'-0"

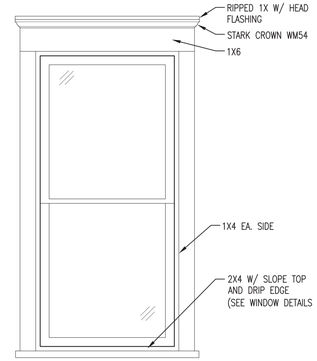

5 TYPICAL WINDOW AND DOOR TRIM
3/4" = 1'-0"

4 WEST ELEVATION
1/4" = 1'-0"

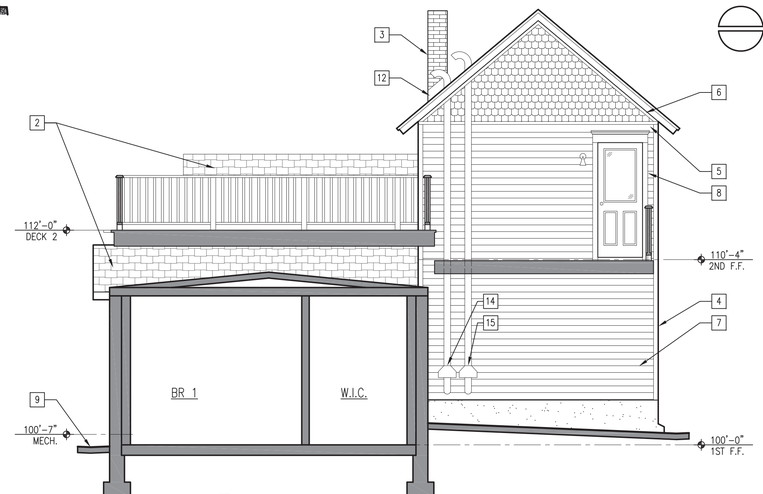

2 NORTH ELEVATION
1/4" = 1'-0"

ELEVATION- GENERAL NOTES:

1. FINISHED FLOOR 100'-0" = 8166.7 USGS.
2. ALL NOTES TYPICAL ALL ELEVATIONS, U.N.O.
3. GUTTERS AND DOWNSPOUTS ARE NOT SHOWN FOR CLARITY. TO BE COORDINATED W/ ROOF PLAN AND REQUIRED CONDITIONS.
4. PAINT ALL EXPOSED ROOF PENETRATION PIPES/VENTS TO MATCH ROOF COLOR.
5. REMOVE ALL EXPOSED PHONE/CABLE FROM EXTERIOR. RE-ROUTE WITHIN FRAMING.
6. REMOVE ALL EXPOSED GAS AND ELECTRICAL CONDUIT FROM EXTERIOR, RE-ROUTE WITHIN FRAMING.
7. PAINT ALL EXPOSED GAS PIPE AND ELECTRICAL CONDUIT TO MATCH ADJACENT SURFACE.
8. INSTALL 24 GA. G.I. AT ALL ROOF/WALL INTERSECTIONS. 2" MIN. REVEAL U.N.O.
9. INSTALL 24 GA. G.I. OVER ALL HORIZONTAL TRIM.
10. INSTALL 8"X8"X3/4" SOLID TRIM BD. BEHIND LIGHT FIXTURES FOR FLUSH MOUNT.
11. REPLACE ALL WOOD SIDING, TRIM, FASCIA, AND SOFFITS.
12. ORNAMENTAL METAL GATES AND GUARDRAILS ARE NOT SHOWN FOR DRAWING CLARITY.

ELEVATION- KEY NOTES:

1. RELOCATE (E) E.M. – VERIFY LOCATION W/ XCEL
2. (N) ASPHALT SHINGLES
3. RESTORE (E) BRICK CHIMNEY
4. 1X4 CORNER BOARD
5. 1X6 HORIZONTAL TRIM W/ CROWN
6. CROWN MOLDING FRIEZE TRIM
7. HORIZONTAL LAP SIDING WITH 4" REVEAL
8. WINDOW AND DOOR TRIM TYP., RE: 5/A300
9. INSTALL (N) 4" THICK CONC. SWALE SLOPED 5% MIN. TO 8"X8" CAST IRON AREA DRAIN THAT CONNECTS TO UNDERGROUND DRAINAGE PIPE
10. REPLACE STONE RETAINING WALL
11. RAISED CONC. CURB
12. INSTALL FLASHING/COUNTER FLASHING AT CHIMNEY
13. (N) STONE VENEER
14. RADON EXHAUST
15. CRAWL SPACE EXHAUST
16. 1X6 FRIEZE BOARD

AB EAST ELEVATION
1/8" = 1'-0"

AB SOUTH ELEVATION
1/8" = 1'-0"

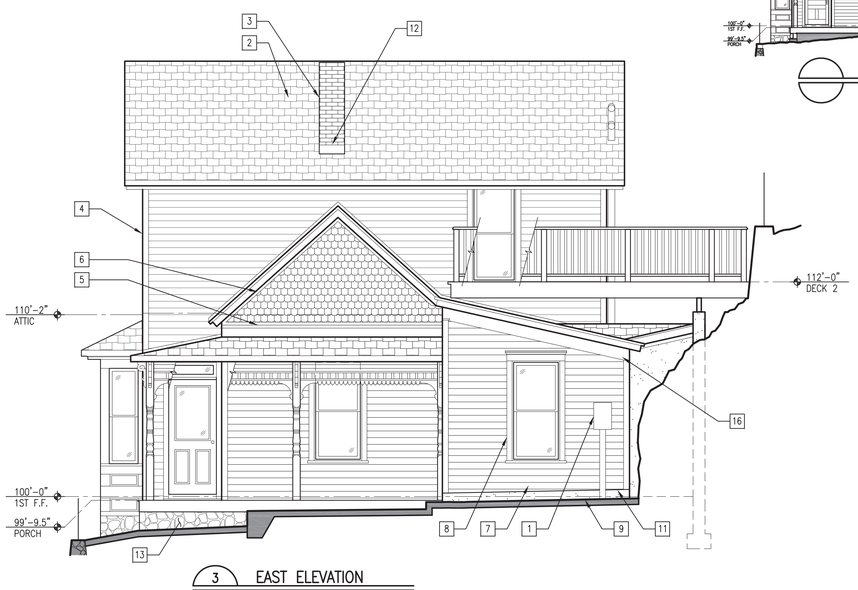

3 EAST ELEVATION
1/4" = 1'-0"

1 SOUTH ELEVATION
1/4" = 1'-0"

0 2 4

NO.	DATE	REVISION
4.	11/04/14	DESIGN DEVELOPMENT SUBMISSION
3.	10/01/14	SCHEMATIC DESIGN SUBMISSION
2.	08/22/14	CONCEPT FLOOR PLANS
1.	08/20/14	AS-BUILT DRAWINGS

PEH ARCHITECTS
1319 Spruce Street Suite 207
Boulder, CO 80302
303-442-0408, fax: 303-447-1905
e-mail: peheinz@peharchitects.com

301 HIGH STREET REHABILITATION

301 High Street, Black Hawk, CO 80422

SHEET TITLE
EXTERIOR ELEVATIONS

PROJECT: 2014.30
DATE: 08/07/14
DRAWN BY: TCF
CHECKED BY: PEH

SHEET NUMBER
A300

F:\2014.30\DWGs\301 High street\Sheets\A300 Exterior Elevations.dwg, 11/5/2014 11:06:56 AM

ROOM FINISH SCHEDULE

ROOM NAME	FLOOR	BASE	WALLS				CEILING		NOTES
			N	E	S	W	MATL	HEIGHT	
LIVING	WOOD	RE: 4/A600					PNT	9'-9"	36" HT. WOOD WAINSCOT
KITCHEN/DINING	WOOD	RE: 4/A600					PNT	8'-9"	36" HT. WOOD WAINSCOT
MECH.	TILE	RE: 4/A600					PNT	9'-9"	
HALL 1	WOOD	RE: 4/A600					PNT	8'-9"	
BATH 1	TILE	RE: 4/A600					PNT	5'-7" TO 8'-0"	
BEDROOM 1	WOOD	RE: 4/A600					PNT	7'-7" TO 10'-2"	LEVEL CEILING AT 7'-7"/ SLOPED AT 8'-1" TO 10'-2"
HALL 2	WOOD	RE: 4/A600					PNT	7'-11"	
BATH 2	TILE	RE: 4/A600					PNT	7'-11"	
BEDROOM 2	WOOD	RE: 4/A600					PNT	7'-11"	
BEDROOM 3	WOOD	RE: 4/A600					PNT	7'-11"	

ABBREVIATIONS

C. TILE = CERAMIC TILE CONC. = CONCRETE GYP. BD. = GYPSUM WALL BOARD P. TILE = PORCELAIN TILE M. TILE = MARBLE TILE

WINDOW SCHEDULE

TEMPERED	MARK	SIZE		HEADER	TYPE	MATERIAL	NOTES	MFR.	UNIT #
		WIDTH	HEIGHT	HEIGHT					
	A	2'-8"	5'-7"	(E)	DH	ALUM CLAD WOOD		MARVIN	CUSTOM
	B	2'-8"	5'-7"	(E)	DH	ALUM CLAD WOOD		MARVIN	CUSTOM
YES	C	2'-8"	5'-7"	(E)	DH	ALUM CLAD WOOD		MARVIN	CUSTOM
	D	2'-5"	5'-7"	(E)	DH	ALUM CLAD WOOD		MARVIN	CUSTOM
	E	2'-1"	5'-7"	(E)	DH	ALUM CLAD WOOD		MARVIN	CUSTOM
	F	2'-1"	5'-7"	(E)	DH	ALUM CLAD WOOD		MARVIN	CUSTOM
	G	2'-5"	5'-7"	(E)	DH	ALUM CLAD WOOD		MARVIN	CUSTOM
	H	(E)	(E) 5'-7"	(E)	DH	(E) WOOD	(E) TO REMAIN	(E)	(E)
	J	2'-9"	5'-7"	(E)	DH	ALUM CLAD WOOD	EGRESS	MARVIN	CUSTOM
	K	2'-9"	5'-7"	(E)	DH	ALUM CLAD WOOD	EGRESS	MARVIN	CUSTOM
YES	L	2'-5"	5'-7"	(E)	DH	ALUM CLAD WOOD	EGRESS	MARVIN	CUSTOM

1. VERIFY ALL WINDOW DIMENSIONS PRIOR TO ORDERING WINDOWS. CUSTOM WINDOW SIZING WILL BE REQ'D. SEE MANUFACTURER'S MEASURING INSTRUCTIONS.
2. INSTALL WINDOWS PER MANUFACTURER'S RECOMMENDATIONS.
3. REQUEST SHOP DRAWINGS PRIOR TO ORDERING WINDOWS FOR ARCHITECT APPROVAL.
4. ADDITIONAL NOTES FOR WINDOWS IN PROJECT MANUAL
5. GLAZING U-VALUES TO MEET OR EXCEED VALUES LISTED ON A000.
6. REPLACE INTERIOR TRIM W/ (N) TRIM PER 4/A600.
7. INSULATE BETWEEN ROUGH OPENING AND WINDOW FRAME W/ LOW EXPANDING SPRAY FOAM INSULATION.
8. SEE CODE ANALYSIS IN REGARD TO EGRESS REQUIREMENTS.
9. FLASH WINDOWS ACCORDING TO 1/A800.
10. WHERE REQUIRED PER IRC R612.2-R612.4 PROVIDE WINDOW OPENING LIMITING DEVICE W/ RELEASE MECHANISM.

DOOR AND FRAME SCHEDULE

MARK	DOOR SIZE			MATL	GLAZING	FRAME	NOTES	MFR.	UNIT #	HDWR.
	WD	HGT	THK							
1	2'-8"	6'-8"	1-3/4"	PNT. WOOD	LOW-E CLEAR	WOOD	(N) 4-PANEL EXTERIOR DOOR, 2 UPPER LITES AND (N) METAL STORM DOOR	SIMPSON	4006	(N)
2	2'-8"	6'-8"	1-3/4"	PNT. WOOD	LOW-E CLEAR	WOOD	(N) 3-PANEL EXTERIOR DOOR, HALF LITE AND (N) METAL STORM DOOR. RESTORE (E) WOOD TRANSOM AND HARDWARE FOR TRANSOM	SIMPSON	7044	(N) & (E)
3	3'-0"	6'-8"	1-3/4"	PNT. WOOD	LOW-E CLEAR	WOOD	(N) EGRESS DOOR, WIDER OPENING, HALF LITE AND (N) STORM DOOR, (N) TRANSOM WINDOW W/ SALVAGED HARDWARE	SIMPSON	7044	(N) & (E)
4	3'-0"	6'-8"	1-3/8"	PNT. WOOD	--	WOOD	(N) 4-PANEL DOOR	SIMPSON	8514	(N)
5	2'-0"	6'-8"	1-3/8"	PNT. WOOD	--	WOOD	(N) 4-PANEL DOOR	SIMPSON	8514	(N)
6	2'-6"	6'-8"	1-3/8"	PNT. WOOD	--	WOOD	(N) 4-PANEL DOOR	SIMPSON	8514	(N)
7	4'-0"	6'-8"	1-3/8"	PNT. WOOD	--	WOOD	(N) PAIR LOUVER DOOR	SIMPSON	8482	(N)
8	2'-4"	6'-8"	1-3/8"	PNT. WOOD	--	WOOD	(N) 4-PANEL DOOR	SIMPSON	8514	(N)
9	2'-4"	6'-8"	1-3/8"	PNT. WOOD	--	WOOD	(N) 4-PANEL DOOR	SIMPSON	8514	(N)
10	2'-6"	6'-8"	1-3/4"	PNT. WOOD	LOW-E CLEAR	WOOD	(N) 3-PANEL EXTERIOR DOOR, CUSTOM SIZE, HALF-LITE, AND (N) STORM DOOR	SIMPSON	7044	(N)
11	2'-4"	6'-8"	1-3/8"	PNT. WOOD	--	WOOD	(N) 4-PANEL DOOR	SIMPSON	8514	(N)
12	2'-0"	6'-8"	1-3/8"	PNT. WOOD	--	WOOD	(N) 4-PANEL DOOR	SIMPSON	8514	(N)
13	2'-0"	6'-8"	1-3/8"	PNT. WOOD	--	WOOD	(N) 4-PANEL DOOR	SIMPSON	8514	(N)
14	2'-4"	6'-8"	1-3/8"	PNT. WOOD	--	WOOD	(N) 4-PANEL DOOR	SIMPSON	8514	(N)
15	4'-0"	6'-8"	1-3/8"	PNT. WOOD	--	WOOD	(N) 4-PANEL BI-PASS DOOR	SIMPSON	8514	(N)

1. ADDITIONAL NOTES FOR (N) AND (E) DOORS IN THE PROJECT MANUAL.
2. PROVIDE DOORSTOPS TO PROTECT ADJACENT FINISHES.
3. GLAZING IN DOORS TO BE TEMPERED.
4. GLAZING U-VALUE TO MEET OR EXCEED VALUES LISTED ON A000.
5. G.C. TO VERIFY DOOR SIZES AT (E) DOOR OPENINGS.
6. (N) WOOD DOOR FRAMES AT ALL NEW AND EXISTING DOOR OPENINGS.
7. REPLACE INTERIOR TRIM W/ (N) TRIM PER 4/A600.
8. SEE PROJECT MANUAL FOR HARDWARE PACKAGES.

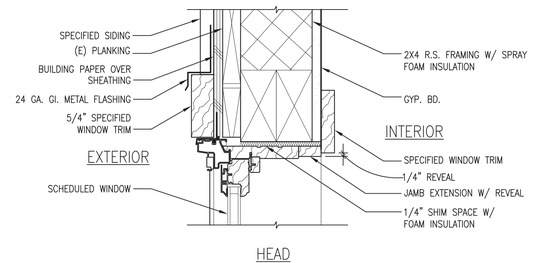

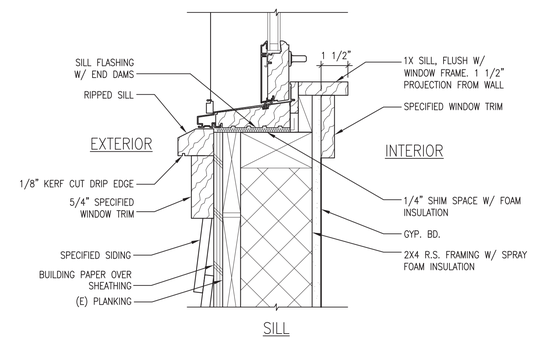

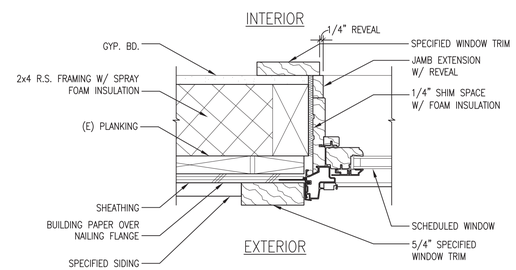

3 TYP. WINDOW JAMB DETAIL
3" = 1'-0"

2 TYP. WINDOW HEAD AND SILL DETAIL
3" = 1'-0"

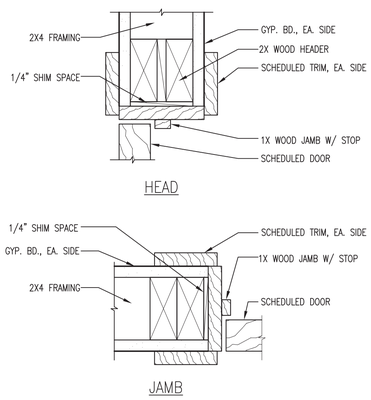

NOTE: CONTRACTOR/ SUB-CONTRACTOR TO VERIFY FRAME DIMENSIONS

5 TYP. EXTERIOR DOOR HEAD AND SILL DETAIL
3" = 1'-0"

4 TYP. INTERIOR DOOR HEAD AND JAMB DETAIL
3" = 1'-0"

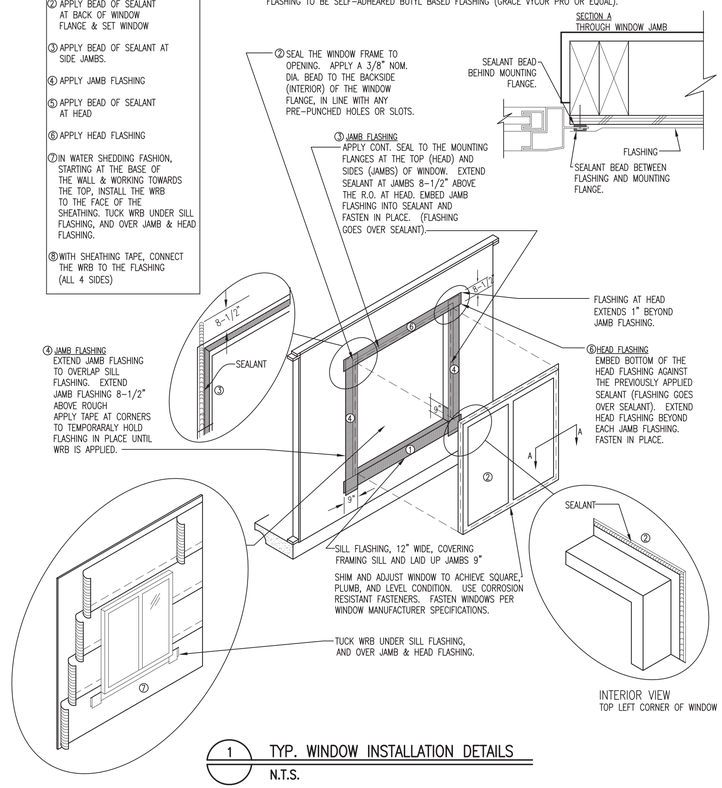

1 TYP. WINDOW INSTALLATION DETAILS
N.T.S.

NO.	DATE	REVISION
4.	11/04/14	DESIGN DEVELOPMENT SUBMISSION
3.	10/01/14	SCHEMATIC DESIGN SUBMISSION
2.	08/22/14	CONCEPT FLOOR PLANS
1.	08/20/14	AS-BUILT DRAWINGS

PEH ARCHITECTS
1319 Spruce Street Suite 207
Boulder, CO 80302
303-442-0408, fax: 303-447-1905
e-mail: peheinz@peharchitects.com

301 HIGH STREET REHABILITATION

301 High Street, Black Hawk, CO 80422

SHEET TITLE
DETAILS AND SCHEDULES

PROJECT: 2014.30
DATE: 08/07/14
DRAWN BY: TCF
CHECKED BY: PEH

SHEET NUMBER
A800

F:\2014.30\DWGS\301 high street\Sheets\A800 Sched.dwg, 11/4/2014 3:27:14 PM

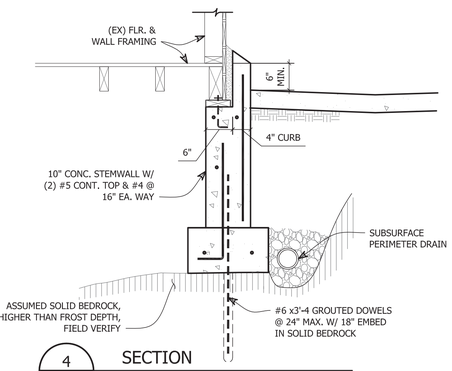

4 S400 SECTION
3/4"=1'-0"

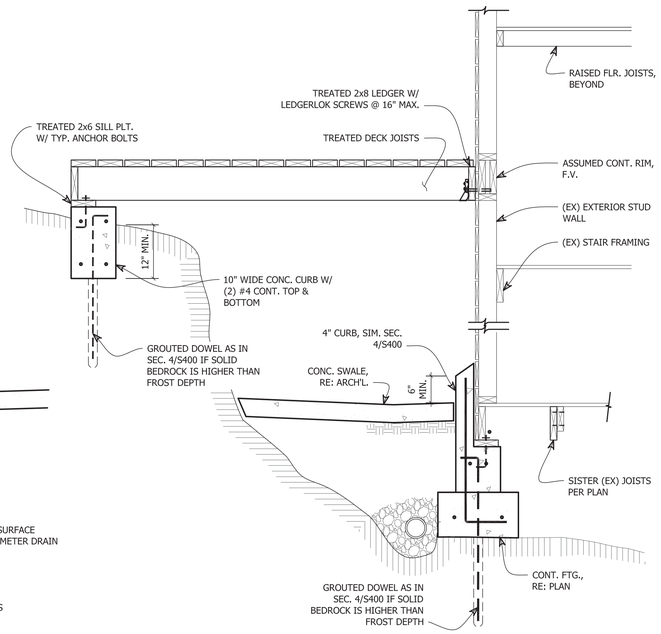

5 S400 SECTION
3/4"=1'-0"

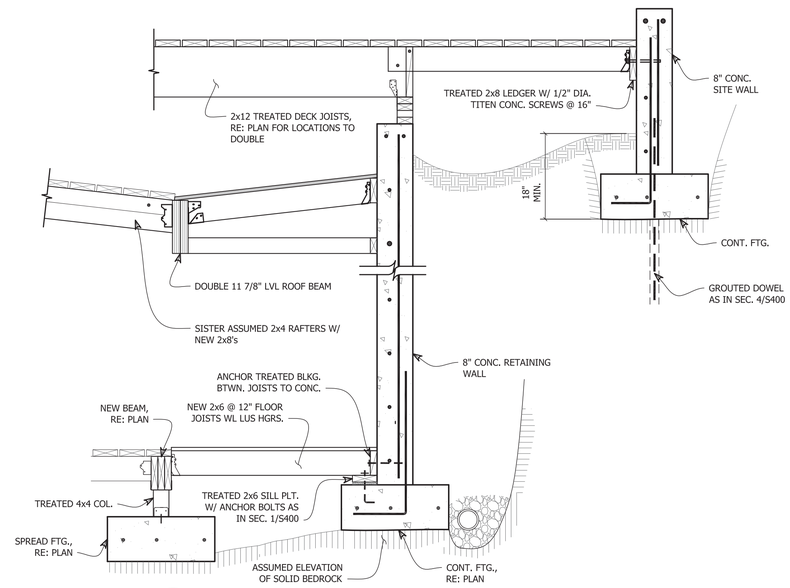

6 S400 SECTION
3/4"=1'-0"

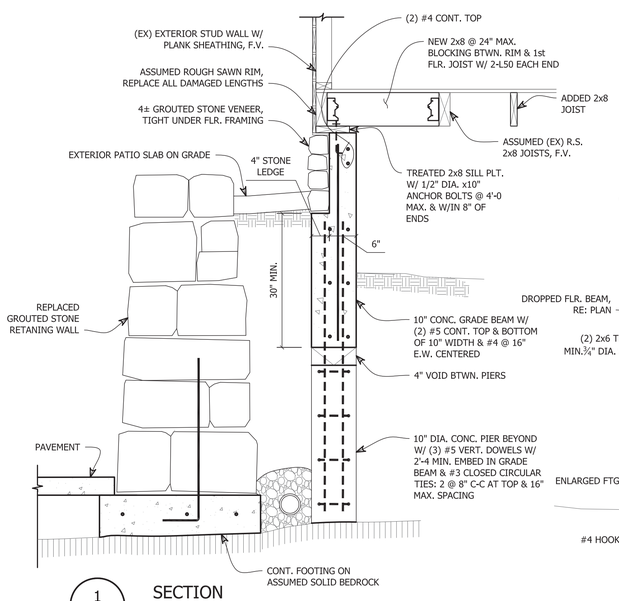

1 S400 SECTION
3/4"=1'-0"

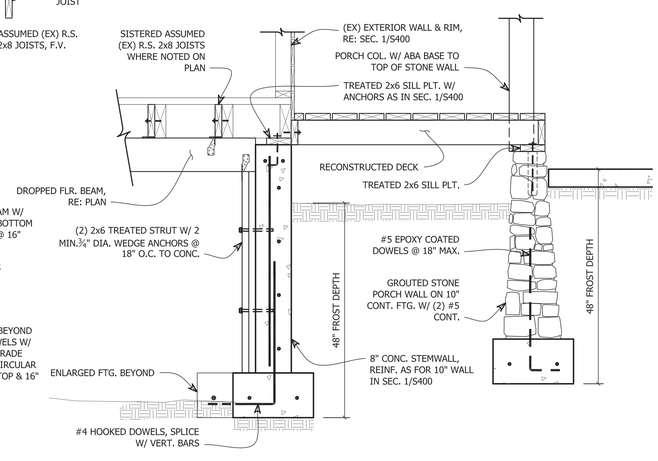

2 S400 SECTION
3/4"=1'-0"

3 S400 SECTION
3/4"=1'-0"

MOZER-RENN
STRUCTURAL SERVICE
6000 E. EVANS AVENUE
SUITE #1-021
DENVER, CO 80222
303-759-2200
nmozer-renn@MRstructural.com

NOT FOR CONSTRUCTION

NO.	DATE	REVISION
1.	10/28/14	50% DD SUBMITTAL

PEH ARCHITECTS
1319 Spruce Street Suite 207
Boulder, CO 80302
303-442-0408, fax: 303-447-1905
e-mail: peheinz@peharchitects.com

301 HIGH STREET
REHABILITATION

301 High Street, Black Hawk, CO 80422

SHEET TITLE
SECTIONS

PROJECT: 0703H14
DATE: 10/28/14
DRAWN BY: SRH
CHECKED BY: NMR

SHEET NUMBER
S400

ATTACHMENT C

Project Manual, PEH Architects

Project Manual

301 High Street

Black Hawk, CO

11/04/14

Design Development Set

PEH OFFICE COPY

DD REVIEW 11/10/14

JESSICA, CINDY, DEON, LLOYD, TINA, TERI, NATHAN

ARCHITECTS

P E H ARCHITECTS

1319 Spruce Street Suite 207 Boulder, CO 80302

phone: 303-442-0408 fax: 303-447-1905 email: peheinz@peharchitects.com

TABLE OF CONTENTS

Table of Contents
Section 0 - Conditions of the Contract 1
Section 1 - General Conditions Supplement 2
Section 2 - Site Work 5
Section 3 - Concrete 6
Section 4 - Masonry 7
Section 5 - Metals 8
Section 6 - Wood 9
Section 7 - Thermal & Moisture 12
Section 8 - Doors & Windows 14
Section 9 - Finishes 16
    Drywall 16
    Flooring, Wall Finish & Counters 16
    Painting 17
Section 10 - Specialties 20
Section 11 - Equipment 21
Section 12 - Furnishings 21
Section 13 - Special Construction 21
Section 14 - Conveying 21
Section 15 - Mechanical 22
Section 16 - Electrical 24
Appendix A: Shop Drawing Submittals Required 26
Appendix B: Not Used
Appendix C: Soils Report
Appendix D: Exterior Finishes Rendering

0 CONDITIONS OF THE CONTRACT

General Conditions and Modification to General Conditions:

These Outline Specifications are intended only to establish a scope and quality of work and are not intended to be complete detailed specifications. Where only one manufacturer is indicated, provide products of that manufacturer. “Equal” products may be submitted concurrently but shall not be submitted as a substitute without prior authorization.

It is implied and required that work which is not fully specified and/or detailed shall comply with applicable, recognized standards of the construction industry for the intended use of work, and shall be complete.

Where there is a conflict between the specifications and the drawings or within the specifications, the Contractor is to assume the higher quality, more expensive product or detail is to be used. It is the responsibility of the Contractor to ask for clarification from the Architect/Design Team.

Dimensions take precedence over scaled drawings. Large scale drawings take precedence over small scale drawings. Concrete and masonry dimensions are to face of concrete or masonry. Wood or steel stud construction is dimensioned to face of finished material unless noted otherwise. Do not scale drawings unless directed by the architect.

Before starting each portion of work, the contractor shall carefully study and compare the various drawings and other contract documents relative to that portion of work. The contractor shall field verify any existing condition related to that portion of work and shall observe any conditions at the site affecting it. These obligations are for the purpose of facilitating construction by the contractor and are not for the purpose of discovering errors, omissions, or inconsistencies in the contract documents; however, any errors, inconsistencies or omissions discovered by the contractor shall be reported to the architects as an RFI.

Any discrepancies found between the drawings and specifications, and site conditions, or any inconsistencies or ambiguities in the drawings or specifications shall be immediately reported to the owner, in writing, who will promptly resolve such inconsistencies or ambiguities in writing. Work done on unreported discrepancies, inconsistencies or ambiguities by the contractor shall be done at the contractor’s risk.

1 GENERAL CONDITIONS SUPPLEMENT

Summary of Work: (Project Description)

Two

This project consists of a one-story historic structure to be finished as indicated on the drawings. Scope is defined in these Outline Specifications and Drawings dated *11/04/14*. The project is located at 301 High Street, Black Hawk, Colorado.

General Alternate Requirements:

General: The description for each alternate is recognized to be incomplete and abbreviated, but implies that each change must be complete for the scope of work affected. Refer to applicable sections and to applicable drawings for the specific requirements of the Owner, whether or not references are so noted in the description of each alternate. Modify surrounding work as required to integrate with the work of each alternate.

1. Add Alternate #1:

Mechanical and Electrical Coordination:

Contractor to carefully coordinate the interface between mechanical and electrical equipment. It shall be the responsibility of the Contractor to furnish, set in place, and wire for power and control.

Regulatory Requirements:

Contractor shall comply with the International Residential Code 2012, International Energy Conservation Code 2012 and all other applicable codes and ordinances, as well as secure all necessary permits and licenses.

Project Meetings:

The contractor shall schedule and administer a Pre-construction meeting, regular construction meetings and specially called meetings throughout the progress of the work. The contractor shall prepare and distribute meeting agenda and meeting minutes. Distribution of agenda and minutes shall be in pdf format. Distribution list shall include, but not be limited to, owner, owner's rep, architect, and each representative of the design team. Paper hard-copies shall be provided at each meeting.

Quality Control:

All material and workmanship shall be subject to inspections, observation, examination and test by the Owner's Representative at any and all times.

Manufactured articles, materials, and equipment shall be applied, installed, connected, erected, cleaned and conditioned per manufacturer's written recommendations and/or trade association standards.

Temporary Utilities; Barriers and Controls:

The Contractor shall be responsible for furnishing all services and connections for water, electricity, and fuel for construction, and shall pay all charges entailed.

The contractor shall provide and pay for temporary services, utilities and facilities which will enable adequate construction progress and processes, and will accommodate other necessary activities at the project site. Services, utilities and facilities shall include but not be limited to water, telephone, electrical, gas, heat, ventilation, sanitary, fire extinguisher, site protection, enclosures, miscellaneous facilities and field office. The cost of providing and using temporary services shall be included in the contract sum. Any fee associated with connections, disconnects and relocations shall be included in the contract sum.

The Contractor shall provide barricades and temporary fences where needed. The construction site shall be cleaned and maintained clean to minimize the impact on surrounding property and rights of way.

Materials, equipment, fixtures or any other future components of the work shall be protected from the weather, stabilized at building temperature and moisture content or the like, as recommended by the manufacturer of the product.

Construction loads exceeding structural design loads shall not be placed upon the structures.

Substitutions and Product Options:

Cost saving alternates, substitutions, and proposals may be acceptable and should be submitted to the Architect for approval. If any alternative, substitute or proposal is found to be unacceptable, the Contractor shall provide the original product or detail at no additional cost.

Submittals:

The GC is to provide a Submittal Schedule upon commencement of construction. The schedule is to list all submittal items required per Appendix A, and to identify approximate dates of submittals. Submittals will be submitted in a timely manner so as to allow the Architect (10) days for review and approval.

GC shall review all submittals for general conformance and provide stamp/signature acknowledging review of documents. All documents (excluding physical samples) shall be provided via PDF format.

Work completed on submittal items prior to design team approval shall be done at the contractors risk.

Contract Closeout:

The Contractor shall provide both hard-copy and PDF format As-Built documentation, both hard-copy and PDF format Operation and Maintenance Manual (O&M Manual), and final lien wavers prior to application for final payment. In addition, the Contractor shall coordinate equipment start up and demonstrate/supply instructions for all equipment. PHOTOS @ ROUGH IN

Cleaning:

At the completion of the work, remove all excess material, construction debris, tools and construction equipment from the site. The entire site and building areas shall be left clean and in ready to use condition, including but not limited to: visible labels removed, and all other exposed surfaces wiped, mopped or washed clean.

Operations and Maintenance:

The Contractor shall provide (1) copy of an O&M Manual and (1) PDF copy. The O&M Manual shall contain specification or product number and name for all appropriate finish materials, as used within the project, any and all warranty information, and any other pertinent information relating to this project. The hard-copy manual is to be 8.5”x11, 3 ring binder with items listed by CSI 16 divisions within. CSI divisions are to be tabbed and there is to be a complete table of contents at the front of the binder. The electronic PDF copy of the manual is to be burned onto a CD or jumpdrive, requiring the same documents included in the hard copy. PDFs of items are to be organized within folders labeled by CSI 16 divisions. A PDF of the complete table of contents is also required.

Selective Demolition:

All General and sub contractors used for demolition must be EPA Lead-Safe Certified.

Remove and dispose identified items described in Demolition Plan(s) and other contract drawings and documents, unless otherwise noted. Cap and identify utilities. Existing finished construction to remain shall be repaired, patched, and blended into new work. Remove all fasteners, hangers, clips, etc attached to or associated with demolished items and assemblies. Provide shoring and bracing as required for demolition work.

Plant Investment Fees:	Not Applicable. (N/A)
Taps:	See Civil Drawings.
Soils Report:	By Cesare, Inc., 8/15/2014 (Attached to Project Manual as Appendix C).
Building Permit:	Pick up by Contractor.

2 SITE WORK

Site Access:	High Street
Demolition:	Coordinate with demo plan and site plans
Grading-Excavating:	Excavate as required to install foundation improvement and provide 18" depth crawl space under house. Excavate/backfill site to install underground utilities. Per Civil Drawings.
Drain Pipe:	See Civil Drawings
Extra Dirt:	Remove from site.
Top Soil:	Spread evenly on disturbed areas.
Landscaping:	Seed all disturbed grading with "multi-color high altitude seed mix" from Arkansas Valley Seed. Provide erosion control mat and temporary irrigation until completion of project. Erosion control mat to be 70% straw and 30% coconut fiber between polypropylene netting. WILD FLOWER MIX @ FRONT OF PATIO.
Irrigation System:	N/A
Site Fence:	See Section 5: Ornamental Guardrail and Section 5: Wire Metal Fencing
Retaining Walls:	See Section 4: Masonry
Tree Removal:	Remove or cut down trees as shown on the site plan. Removal shall include grinding out stump to a minimum of 12" below grade.
~~LANDSCAPING ROCK:~~	~~COLORADO MATERIALS INC. DECORATIVE STONE, BUTTER ROCK.~~

3 CONCRETE

Strength:	3000 psi.
Concrete:	Ready-mix.
Thickness:	4" U.N.O.
Expansion joints:	½" expansion filler material with plastic leveling screed peel-off caulk strip. Polyurethane non-sag self-leveling sealant. Provide at all junctions of slab and building.
Reinforcing:	Fibermesh or as noted in the drawings.
Finish:	Light broom exterior, steel trowel interior.
Protective coating:	N/A
Conc. Stain:	N/A
Walkways:	N/A
Driveway:	N/A
Exterior Patio:	4" concrete with deep tooled control joints at 2'x2' spacing (or as shown on plan) over 4" compacted road base. Provide expansion joints at all junctions of slab and building as noted above.
Drainage Swale:	4" thick with broom finish over 4" compacted road base. Provide expansion joints at all junctions of slab and building as noted above.
Concrete Stairs:	6" min. thickness, ½" bull nose, broom finish
Concrete Retaining Wall:	See structural plans and details. ~~Provide integral coloring throughout concrete, Davis Colors~~

4 MASONRY

Stone Retaining:	Native stone, random sizing to maintain consistency of adjacent wall. Coursing to be roughly horizontal with irregular, rough, un-cut rubble of ___in. minimum to ___in. maximum in diameter. Match adjacent wall construction for stone color variation and stone coursing.
Stone Mortar:	ASTM Type M. Mortar joint to appear like stone is dry stack. Wall mortar to allow for free draining of water.
Foundation Stone Veneer:	Native stone, roughly 3”-5” thick. Coursing to be roughly horizontal with irregular, rough, un-cut rubble of ___in. minimum to ___in. maximum in diameter. Provide reinforcing ties as detailed/specified by structural.
Stone Veneer Mortar:	ASTM Type S. Mortar joint to be flush with face of stone.

5 METALS

Steel Items:	Primed 1 coat.
Foundation Bolts:	½" x 10". ASTM A307 or A36, see structural drawings.
Post Stirrups:	1/8" steel.
Beam/Post Straps:	1/8" steel.
Connectors:	1/8" steel strapping or Simpson connectors.
Handrail:	1 ½" Diameter steel pipe with welded joints. Grind joints smooth. Powder coat black. Field touch up paint w/ black polyurethane paint. Provide vertical post or bracket at 6'-0" O.C. max.
Ornamental Guardrail:	See drawings for details, powder coat black. Grind all welds smooth. Panel at sloping grade to be installed on a rake to follow finished grade (top and bottom rail to follow slope of finished grade; posts to be vertical).
Wire and Steel Guardrail:	See drawings for details. All posts and horizontal rails to be weathering steel (Cor Ten). Grind all welds smooth. Re-use salvaged metal wire fencing found at the front and rear of the house. Pull wire fencing tight. Hammer wire fencing "flat" prior to hanging. Wire tied at each steel post and at 24" O.C. top and bottom. Panel at sloping grade to be installed on a rake to follow finished grade (top and bottom rail to follow slope of finished grade; posts to be vertical).

.. GATE: SELF CLOSING W/ ADDITIONAL LATCH ON STONE RETAINING WALL

6 WOOD

Studs:	Hem Fir, #2 or better, U.N.O. See Structural Plans.
Framing Lumber:	Hem Fir, #2 or better, U.N.O. See Structural Plans.
Roof Trusses:	N/A
Rafters:	Hem Fir, #2 or better, U.N.O. See Structural Plans.
Beams:	See Structural Plans.
Backing for Accessories:	N/A
Wall Sheathing:	½” CDX plywood or 7/16” OSB - APA rated 24/16 exp 1, blocked and nailed U.N.O.
Roof Sheathing:	½” CDX plywood or 15/32” OSB, APA 32/16, nailed
Subfloor:	¾” T&G OSB, Install per structural.
Soffit:	3/8” x 4” double beadboard, smooth pine, painted
Fascia:	1x6, rough cedar, clear vertical grain, plowed for soffit.
Interior Trim:	All trim to be a poplar or solid wood (no finger joint material) paint grade. See drawings for profiles.
Base:	See “interior trim”
Casing:	See “interior trim”
Material:	See “interior trim”
Window:	See “interior trim”
Door:	See “interior trim”
Exterior Trim:	5/4” Rough cedar, clear vertical grain. Siding is not to project past the edge of the trim. Pre-prime all 6 sides and field cut prior to install.
Corner:	5/4”x4”.
Window:	5/4”x4”. For jamb and sill, include ripped 2”x4” sill extension w/ sloped top and drip edge kirf cut. See Elevation Drawings. 5/4”x6” and crown molding for head.
Door:	5/4”x4” for jamb. 5/4”x6” and crown molding for head.

Exterior Lap Siding:	Smooth cedar, clear vertical grain, bevel lap siding, 4” reveal. Pre-prime all 6 sides and field cuts prior to install. Fasteners to be concealed by consecutive installation of next lap board above.
Deck:	
Decking:	2”x6” red wood Architectural B Grade
Fasteners:	Concealed fasteners
Guardrail:	Red wood B Grade
Exterior Stairs:	
Stringer:	2”x12” pressure treated
Treads:	2”x6” red wood Architectural B Grade
Riser:	1”x8” red wood Architectural B Grade, ripped.
Handrail:	See Section 5: Metals
Balusters:	N/A
Porch:	
Decking:	1”x6” red wood Architectural clear (special order)
Fasteners:	Concealed
Porch Guardrail:	Parts to be poplar from LJ Smith
Top Rail:	LJ-6010
Balusters:	LJ-5060, 1-1/4”x1-1/4” square
Bottom Rail:	LJ-6000 (Plow on under side). Glue LJ-6000F to top of bottom rail between balusters.
Interior Stairs/ Railing:	Refurbish existing treads, risers, balusters, and handrail. Strip all clear coat and stain from existing material. Sand all material smooth exposing new wood. Small dents and divots from existing wear are expected; however, fill deep holes and gouges. Prep for stain and clear finish of all historic material.
Handrail:	Refurbish
Newel Post:	Refurbish
Baluster:	Refurbish
Top Rail:	Refurbish

Bottom Rail:	N/A
New Handrail:	LJ-Smith LJ-6010, poplar painted. Provide brackets at 6’-0” O.C. max.
Closet Shelves:	¾” particle board with white melamine and PVC edge band on matching 1 x 2 wood ledger.
	Closets: Shelf @ 6’-0” A.F.F.
Closet Clothing Rod:	1 ½” diameter wood rod, provide middle bracket if span exceeds 4’-6”.
Built-in Cabinetry:	See plans for details.

7 THERMAL AND MOISTURE PROTECTION

Roofing:	
Type:	Asphalt, Owens Corning Oakridge Shingles, ~~Brownwood~~ AGED CEDAR
Warranty:	30 Year
Roofing Paper:	DuPont "Roofliner" underlayment
Ice + Water Shield:	Install Ice + Water Shield 3'-0" up from eave under roofing base.
Roof Accessories:	
Drip Edge:	28 gauge galvanized, painted.
Roof Vent:	N/A
Soffit Vent:	N/A
Gutters:	Galvanized 24 gage steel. Not painted. Hidden clips @ 18" O.C.
Size/Shape:	4" Half Round, with reverse bead (coordinate w/ clips).
Downspouts:	Galvanized 24 gage steel. Not painted. Clips @ 48" O.C. max.
Size/Shape:	3" circular.
Valley Flashing:	Lace asphalt shingles over valley. 3'-0" ice and water shield.
Drainage Plane:	Masonry Technology Institute "Sure Cavity" rainscreen drainage plane, installed on wall surface behind stone veneer. Fabric facing to be on "weather" side.
Masonry Weep:	Masonry Technology Institute "Stone Cavity Weep"

Insulation:

Wall:	R-24 depth, 2lb. closed cell spray foam by Bayseal (R-6.9/Inch).
Under Roof:	R-49 depth, 2lb. closed cell spray foam by Bayseal (R-6.9/Inch). Provide intumescent paint in exposed attic areas as required by local code and per manufacturer's instructions. (Contractor's option to use closed cell spray foam with class 1 fire rating).
Flat Ceiling:	N/A
Conc. Floor:	~~N/A (Mechanical Room?)~~
Foundation:	R-15 depth, 2lb. closed cell spray foam by Bayseal(R-6.9/Inch). Provide intumescent paint in exposed crawl space areas as required by local code and per manufacturer's instructions. Provide 2' of R-15 F.G. batt insulation to lie on crawl space floor over vapor barrier, see drawings. (Contractor's option to use closed cell spray foam with class 1 fire rating).
Foam Insulation:	All electrical outlets and wire holes in plates/joists, windows and exterior doors (low expanding foam @ doors and windows).
Pipe Insulation:	See Mechanical Plans.
Vapor Barrier:	Class A - 15 mil, Stego Industries or equal. 6" overlap of sheet, 6" up foundation walls. Tape all seams with manufacturer's tape. Seal all penetrations with manufacture's tape.
Building Paper:	Tyvek "Home Wrap" vapor permeable infiltration barrier. Minimum 6" vertical overlap. Manufacturer approved tape at all seams and penetrations.
Skylights:	N/A
Asphaltic Waterproofing:	Bituminous Damproofing Provide 2 coats of an asphalt emulsion conforming to ASTM DI 187 to exterior vertical concrete surfaces of the foundation. Do not extend above grade.

8 DOORS AND WINDOWS

New Windows:

Brand:	Marvin
Type:	Ultimate Clad Double Hung
Interior:	Pine, factory applied prime. G.C. to paint per "Section 9c Interior Trim"
Exterior:	Factory applied AAMA 2605-05 finish. Color to be "Dessert Beige."
Glass:	LOE-180-Argon, Double Pane. U-Value 0.31, Preserve protective film (high altitude). SHGC=0.49, VT=0.56, CR=55
Tempered Glass:	See Window Schedule on plans.
Egress:	See Window Schedule on plans.
Screens:	Aluminum full screen frame to match window finish. ~~Black aluminum~~ FIBERGLASS screen mesh.
Divided Lights:	N/A
Hardware:	BRIGHT Brass finish sash lock and sash lift.
Flashing:	Flash per manufacturer's instructions (See window details on plans).
Warranty:	Glazing - 20 year seal failure/10 year stress crack - Non-glazing components - 10 years

Additional Window Notes: N/A

Mirrors: (also see Section 10: Specialties for med cabinet)

Plate:	N/A
Size:	N/A
Location:	N/A

Doors:

Interior Passage Doors:	Simpson ~~"Encore"~~ SOLID WOOD Series, solid core with wood edge strip, four-panel (raised). Simpson 8514. Painted.
Laundry Doors:	Simpson "Interior Panel Door" Series, Plantation Louver door. Simpson 8482. Painted.
Interior Door Hardware:	

Swing Door Hardware:	KWIKSET ~~Schlage~~, SIGNATURE SERIES ~~SIENA~~ LAUREL ~~style~~ knobsets, ~~antique~~ BRIGHT brass finish
Pocket Door Hardware:	N/A
Exterior Doors:	Simpson 4006 and Simpson 7044, Fir/Hemlock, ¾" insulated tempered glass. Painted.
Exterior Utility Room Door:	N/A
Exterior Screen Doors:	Liberty Home Products, Inc. "120 split trim II" from the traditional COPPERVEIN collection storm doors (303-698-1750) or equal. ~~Black~~ powder coat steel. Bright brass hardware with key to match entry door. Clear tempered glass. Provide charcoal fiberglass insert. GC to verify and provide custom sizing.
Exterior Door Hardware:	KWIKSET ~~Schlage~~ SIGNATURE SERIES ~~Fusion hardware group~~, "SHELBURNE" ~~"Brookshire" style~~ lockable handleset and deadbolt. Match key to all exterior handlesets and deadbolts. Matte black finish on exterior. ~~Antique~~ BRIGHT Brass on interior.
Hinges:	3 per door, finish to match handles.
Door Frames	Interior and exterior door frames to be solid, paint-grade wood, poplar or equal (No finger-joint material).
Weather seals:	Install/provide new at all new and existing exterior doors.
Thresholds:	Adjustable oak top sill with anodized aluminum exterior (Pemko or equal). Exterior finish to be anodized dark bronze aluminum.
Door Stops:	Schlage Solid Door Stop #SC61Z619, finish to match door hardware. Provide at all pivot doors. Preferred mounting locations in order of most to least preferred: baseboard, floor, wall at knob, hinge mounted.
Exterior Storage Door:	N/A
Shed Doors:	~~Re-use existing wood shed door at uphill shed. Re-use existing hinge, pull and latch. Paint to match siding and trim.~~
Garage Doors:	N/A

9 FINISHES

A. DRYWALL/PLASTER

Material:	Gypsum wallboard-regular tapered edges throughout.
Finish Level:	Level 4 finish with texturing, provide paper board furring, plywood furring, and other accessories to ensure gyp board is plumb with the following tolerances: 1/16" per foot, 1/8" per 8 feet.
Wet Locations:	1/2" Dens-Sheild underlayment.
Thickness:	1/2" U.N.O.
Joint Treatment:	Butt Joint.
Corner Treatment:	Square.
Attachment:	All drywall must be screwed.
Wall Finish:	Hand trowel finish w/ full mud coverage.
Ceiling Finishes:	Spray texture w/ light trowel.
No Finish Area:	N/A

PATTERENED TEXTURED TILE IN LIVING

B. FLOORING, WALL FINISH AND COUNTERS

Flooring:

Carpet 1:	To be selected by owner.
Pad:	N/A
Wood 1:	To be selected by owner.
Porcelain Tile 1:	To be selected by owner. Install on mortar bed over 1/8" waffle isolation mat (schluter-"ditra" or equal) over mortar bed. Follow manufacturer's instructions.
Grout:	To be selected by owner. Grout lines to be as tight as recommended by tile manufacturer. Seal Grout with Mapei grout sealer. Provide color sample for approval by owner. Provide matching sanded caulk for expansion joint treatment at dissimilar material joints.
Sheet Vinyl:	N/A

Baseboard:

Wood Base 1: Poplar paint grade. See plans and Room Finish Schedule.

Tile: N/A

Rubber: N/A

Walls:

Field Tile: To be selected by owner. Over ½" Dens-Shield underlayment. See architectural interior elevations for locations.

Accent Tile Band: To be selected by owner. Over ½" Dens-Shield underlayment. See architectural interior elevations for locations.

Tile Edge: To be selected by owner.

Grout: To be selected by owner. Grout lines to be as tight as recommended by tile manufacturer. Seal Grout with Mapei grout sealer. Provide color sample for approval by owner. Provide matching sanded caulk for expansion joint treatment at dissimilar material joints.

Tile Waterproofing: N/A

Kitchen Backsplash: To be selected by owner.

Grout: To be selected by owner. Grout lines to be as tight as recommended by tile manufacturer. Seal Grout with Mapei grout sealer. Provide color sample for approval by owner. Provide matching sanded caulk for expansion joint treatment at dissimilar material joints.

Bath Backsplash: To be selected by owner.

Kitchen Counters: To be selected by owner.

Bath Counters: To be selected by owner.

C. PAINTING/STAINING

No Finish Areas: N/A

Paint Primer: Provide (1) coat of primer for all painted areas prior to applying the required listed number of finish coats of paint per each material section. Primer shall be of contrasting color to finish paint.

Exterior Wood: 3 coats satin acrylic latex over 1 coat primer. 5 color scheme. Exterior paint to be applied with either brush or roller only (do not spray). All paint by Sherwin

Williams A-100 exterior latex A82 series or equal (coordinate w/ exterior rendering in Appendix). Provide color match to owners selected colors from Benjamin Moore.

Body + Soffit: HC-153 Marlboro Blue

Trim: Hamilton Blue

Gradient: HC-152 Whipple Blue

Accent 1: AF-275 Rustique

Accent 2: HC-84 Elmira White

Deck Stain:

GC to submit 12x12 cured system sample with prep and final color for approval.

Prep: 2 Steps

CLEAR TREATMENT

- Clean decking w/ SW-Deckscapes deck wash
- Apply SW-Deckscapes revive

Apply 2 coats alkyd semi-transparent deck stain, SW-Deckscapes exterior oil semi-transparent stain. Color to be selected by owner from manufacturer standard colors.

Breathable Waterproof Finish:

N/A

Conc. Stain: N/A ~~See Section 3: Concrete, Concrete Retaining Wall.~~

Exterior Metal:

Metals shall be powder coated in a climate controlled shop. Field touch-up paint at welds on-site with polyurethane paint, Sherwin Williams Hi-Solids Polyurethane paint over "Macropoxy 646" Fast cure epoxy primer.

Interior Drywall/Plaster:

2 coats acrylic latex, low VOC, over 1 coat primer. Sherwin Williams promar 200 zero VOC B31-2600 series or equal. Semi-gloss at kitchen and bath, all other areas to be satin (3 color options).

Paint 1: To be selected by owner.

Paint 2: To be selected by owner.

Paint 3: To be selected by owner. Finish to be matte at ceilings and semi-gloss at trim/doors.

Interior Trim:

2 coats semi-gloss acrylic latex, low VOC, over 1 coat primer. Sherwin Williams promar 200 zero VOC B31-2600 series or equal. To be selected by owner.

Interior Doors:	2 coats semi-gloss acrylic latex, low VOC, over 1 coat primer. Sherwin Williams promar 200 zero VOC B31-2600 series or equal. To be selected by owner.
Interior "Stained" Wood:	
Stain:	1 coat oil based stain, Sherwin Williams Sherwood Wiping stain, (or equal), color to match existing, 1 coat oil based sealer Sherwin Williams Sherwood Fast Dry Vinyl Sealer. Contractor to provide samples of stain on actual wood to be utilized for approval prior to staining project.
Transparent Finish:	2 coats polyurethane, "minwax polyurethane for floors" or equal.
Caulking:	Silicone or Acrylic, all open joints, color of adjacent surface. Provide sanded caulk at tile areas.
MDF Products:	Prime all MDF products with low VOC acrylic latex
Construction Adhesives:	low VOC

10 SPECIALTIES

Crawl Space Vents:	N/A – Crawl space to be mechanically conditioned. See Mechanical Drawings.
House Numbers:	4” high, matte black finish. Schlage Classic House numbers.
Medicine Cabinets:	Kohler Archer 20”W X 31”H K-3073-NA
Fireplace:	
Model:	N/A
Brand:	N/A
Size:	N/A
Flue:	N/A
Attic Ladder:	N/A
Bathroom Accessories:	
Towel Ring:	To be selected by owner.
Towel Rod:	To be selected by owner.
Robe Hook:	To be selected by owner.
Shower Curtain Rod:	To be selected by owner.
Toilet Tissue Holder:	To be selected by owner.

11 EQUIPMENT

Refrigerator:	To be selected by owner. Provided by owner. Installation, including any required installation kit or materials, by G.C.
Oven/Range:	To be selected by owner. Provided by owner. Installation, including any required installation kit or materials, by G.C.
Dishwasher:	To be selected by owner. Provided by owner. Installation, including any required installation kit or materials, by G.C.
Disposal:	See plumbing plans and schedule.
Microwave:	N/A
Microhood:	To be selected by owner. Provided by owner. Installation, including any required installation kit or materials, by G.C.
Hood:	N/A
Trash Compactor:	N/A
Washer:	To be selected by owner. Provided by owner. Installation, including any required installation kit or materials, by G.C.
Dryer:	To be selected by owner. Provided by owner. Installation, including any required installation kit or materials, by G.C.

12 FURNISHINGS

Window Coverings:	N/A
Manufactured Cabinetry:	
Kitchen Cabinetry	To be selected by owner. See Interior Elevations.
	Hardware: To be selected by owner. Hinges and door glides to be “no slam.” Door overlay to be full overlay with concealed hinges.
Bath:	To be selected by owner. See Interior Elevations.
	Hardware: To be selected by owner. Hinges and door glides to be “no slam.” Door overlay to be full overlay with concealed hinges.

13 SPECIAL CONSTRUCTION (NO WORK.)

14 CONVEYING (NO WORK.)

15 MECHANICAL

Site Utilities:	See Civil Drawings.
Gas Service:	See Civil Drawings.
Gas Meter Location:	See Civil Drawings.
Pressure Reducing Valve:	See Civil Drawings.
Gas Piping:	Rework areas affected by renovation w/ galvanized piping. PE pipe at underground locations. Bury exposed pipe at retaining wall. Coord. w/ Civil Drawings.
Gas Devices:	Boiler, Range, Dryer, BBQ Grill.
Sewer Service:	See Civil Drawings.
House Sewer:	See Plumbing Drawings.
Water Supply:	See Civil Drawings.
Water Service:	See Civil Drawings.
Water Tap:	See Civil Drawings.
Water Meter:	See Plumbing Drawings.
Main Run Size:	See Civil drawings
Branch Size:	See Civil drawings
Hose Bib:	Frost proof. See Plumbing plans and schedule.
Sump Pump:	N/A
Floor Drains:	See mechanical plans.
Water Heater:	N/A
Make:	N/A
Model:	N/A
Type:	N/A
Fixtures:	
Lavatories:	See plumbing plans and schedule.

Faucets:	See plumbing plans and schedule.
Controls:	See plumbing plans and schedule.
Kitchen Sink:	See plumbing plans and schedule.
Toilets:	See plumbing plans and schedule.
Shower:	See plumbing plans and schedule.
Bathtub:	See plumbing plans and schedule.
Shower Enclosure:	
Door:	N/A
Glazing:	N/A
Wall:	N/A
Bench:	N/A
Pan:	N/A

Mechanical System:	See Mechanical Plans.
Make:	See Mechanical Plans.
Supply Location:	See Mechanical Plans.
Zones:	See Mechanical Plans.
Controls:	See Mechanical Plans.
Programmable Thermostat:	See Mechanical Plans. With low-voltage or line voltage power (Battery power is not acceptable).
Unit Size:	See Mechanical Plans.
Floor Diffusers:	N/A
Duct Sizing:	N/A
Outside Air Intake:	See Mechanical Plans.
Make-up Air Intake:	See Mechanical Plans.
Air Conditioning:	N/A

16 ELECTRICAL

Service:	See Civil Drawings.
Meter Location:	See Civil Drawings.
Size:	See Electrical Plans.
Panel:	See Electrical Plans.
Wiring:	Romex.
Switches and Outlets:	All switches, outlets and cover plates to be ~~white~~ ALMOND color. Toggle. ALT. COLOR @ BACKSPLASH
Dimmers:	Slide level with Toggle On/Off.
TV Jacks/Data:	Relocate exposed cable wire within framing.
Type:	See Electrical Plans.
Location:	See Electrical Plans.
Wire and Install:	
Refrigerator:	Yes
Oven-Range:	Yes
Cook top:	N/A
Microwave:	N/A
Micro hood:	Yes
Hood:	N/A
Dishwasher:	Yes
Disposal:	Yes
Dryer:	Yes
Washer:	Yes
Electrical O.H. Door:	N/A
Bath Fans:	Low noise fan with backdraft damper. See Mechanical Plans.
Heat Lamp:	N/A
Air Conditioning:	N/A
Door Bell Location:	N/A

Telephone Outlets:	See Electrical Plans.
Location:	See Electrical Plans.
Smoke Detectors:	Hardwire and install per code, See Electrical Plan.
Carbon Monoxide Detector:	Hardwire and install per code, See Electrical Plan
Emergency Generator:	N/A
Light Fixtures:	See Electrical Plan and Schedule.

END OF SPECIFICATIONS

APPENDIX A: SUBMITTAL TABLE

Spec. Section	Product or Material	Submittal Type (see below)
Div 2 Sitework	None	
Div 3 Concrete	None	
Div 4 Masonry	Stone masonry & mortar	
	Brick masonry & mortar	
Div 5 Metals	Ornamental Guardrail	
	Wire and Steel Guardrail	
Div 6 Wood	Interior trim- base & casing	
	Exterior siding, trim, fascia & soffit	
Div 7 Thermal/Moist.	Roofing	
	Gutters & Downspouts	
	Insulation	
Div 8 Openings	Doors, frames & hardware	
	Windows, frames & hardware	
Div 9 Finishes	Flooring - all types (tile/vinyl/etc.)	
	Wall tile & backsplashes	
	Interior paint	
	Exterior paint	
	Kitchen & Bath counters	
Div 10 Specialties	Bath Accessories	
Div 11 Equipment	None	
Div 12 Furnishings	Manufactured Cabinetry & Pulls	
Div 15 Plumb/Mech	Boiler	
	Furnace	
	Toilets	
	Lavatories/Sinks & faucets	
	Showers/Tubs & faucet/controls	
Div 16 Electrical	Light fixtures	

Legend
a. Shop drawings (PDF format)
b. Catalog data (PDF format)
c. Samples, colors
d. Mock-up

Submittals are not contract documents. Their purpose is to demonstrate the way by which the contractor proposes to conform to the information given and the design concept expressed in the contract documents for those portions of the work. Submittals that are not required will not be reviewed or returned by the design team. Submittals will be submitted in a timely manner so as to allow the architect (10) days for review and approval.

ATTACHMENT D

"Window, Siding, and Trim Investigation of 301 High Street," Anthony & Associates

Report:

Window, Siding, and Trim Investigation of 301 High Street, Black Hawk, Colorado

Submitted to:

The City of Black Hawk
211 Church Street
Black Hawk, CO 80422

Submitted by:

Anthony & Associates, Inc.
P.O. Box 271400
Fort Collins, CO 80527-1400

September 25, 2014

Window, Siding, and Trim Investigation of 301 High Street, Black Hawk, Colorado

BACKGROUND

This report is based on information provided by Ms. Cynthia Linker from the City of Black Hawk. Anthony & Associates, Inc. (A&A) was asked to conduct a limited investigation of the exterior architectural wood of 301 High Street (the Building), a privately-owned property located in Black Hawk, Colorado.

The Building, which is believed to have been constructed ca. 1897 and modified ca.1910, is a wood-frame building with a roughly square footprint. It is clad with wood trim and wood siding. There are two outbuildings immediately adjacent to the Building; they do not appear to be historic and were not included in this investigation.

SCOPE OF WORK

There were questions regarding the general condition and age of the Building's wood siding. The species of the wood siding was unknown. It was also not known whether insects or decay fungi are active and if deterioration of the wood has occurred. The level of investigation was chosen to provide insight about the age and general condition of the exterior architectural wood.

The scope of work included the following tasks:

- Conducting a site visit to photograph and document existing conditions, followed with a limited assessment report.
- Removing a minimum of 8 wood species samples to identify the wood species or wood species groups for the siding and exterior trim elements.
- Conducting a limited visual investigation of the visible wood conditions of the Building that included taking moisture content measurements of a representative sample of siding elements to determine whether conditions exist that are favorable to the growth of wood decay fungi and to identify areas of moisture intrusion.
- Examining the fasteners and the siding for indicators of age.

FIELD PROCEDURES

Anthony & Associates, Inc. provided a wood specialist on September 18, 2014 to conduct an investigation of the wood windows, exterior wood siding, and exterior trim of the Building. The investigation was based on a combination of visual inspection, moisture content determination and species identification. These methods are described below.

Species Identification

The Building is clad in wood siding with wood trim. Identifying wood species makes it possible to identify compatible material for repairs and can aid in historic interpretation of construction or repair campaigns. Wood species were identified by removing small samples from which the species or species group were identified under microscopic examination. Although a minimum of 8 samples was included in the authorization, additional samples were removed to identify species of key architectural wood elements and to aid in developing historical documentation and interpretation.

Visual Inspection

Visual examination of the wood allows for identifying components that are missing, broken, or in an advanced state of deterioration. If missing components were intended to provide protection from the elements (i.e., to prevent moisture intrusion), their replacement may be essential to prevent long-term damage to the structure. Visual inspection also allows for the detection of past or current moisture problems, as evidenced by moisture stains on the exposed surface of the wood. Further, visual inspection enables detection of external wood decay fungi or insect activity as determined by the presence of decay fruiting bodies, fungal growth, insect bore holes or wood substance removed by wood-destroying insects.

Moisture Content Determination

Prolonged exposure to moisture can produce undesirable conditions and maintenance issues for wood in a structure. Shrinkage, swelling, checking, loose connections, and decay are typical problems. Moisture content measurements were taken at multiple locations of the exterior siding and trim.

Moisture content measurements identify wood with favorable moisture levels for the growth of wood-decay fungi. Generally, if the moisture content is less than 20 percent, wood-decay fungi are unable to grow. While fungi may be present at lower moisture contents, they are unable to continue to deteriorate the wood without sufficient moisture. Moisture contents from 20 to 30 percent indicate areas of concern where sufficient moisture is present for fungi to grow but not sufficient to indicate advanced decay. Moisture contents above 30 percent can indicate advanced decay with internal voids and/or surface deterioration.

FINDINGS

General

The Building currently has a roughly square footprint and is oriented approximately on a southwest-northeast axis; for ease of reference, the elevation facing High Street is referred to as the south elevation. The Building appears to have been constructed in multiple phases, and may likely have had a "T-shaped" footprint in 1910 (similar to the house just to the left of the Building in Figure 1). The various alterations are apparent when viewed at the roofline (Figure 1). See Figure A-1 in the Appendix for a sketch plan of the Building with the labeled additions.

Figure 1. Google Earth image showing the roof lines of the Building.

The Building is clad in wood siding on all elevations except for a small area under the deck that is clad in asphalt shingles (Figure 2). Decorative fish-scale wood shingle siding is visible at the roof peaks of the 2-story section and the 1 $^{1}/_{2}$-story section (Figure 2).

Figure 2. East elevation showing wood siding, asphalt shingles and fish-scale shingles.

All of the accessible windows, with the exception of one on the east elevation of the shed roof addition have been covered by aluminum storm windows (Figure 3). The shed roof addition appears to be a relatively recent alteration and its window is not historic. Because the single lite, double hung windows were not accessible, no determination can be made of their age; however, the window hardware visible through the glass indicates that the windows may be historic and/or original to the construction or early modification of the Building (Figure 4).

Figure 3. Aluminum storm windows cover the accessible windows.

Figure 4. Window hardware viewed through the glass appears to date to the period of construction and/or early modification (ca. 1910).

The horizontal wood siding and decorative fish scale wood shingle siding appear to be, in general, good to excellent condition, with a few exceptions. The west elevation of the Building (the 2-story section) has siding located above the window line that is cupped, warped, and/or twisted (Figure 5). This change in appearance is indicative of possible

replacement material on the lower (more accessible) portion of the west elevation and historic material on the upper portion.

Figure 5. West elevation of the 2-story section showing cupped and warped siding above straight siding.

The decorative fish-scale wood shingle siding appears to be in excellent condition (Figure 6). Due to its pristine appearance, it is likely that the decorative shingles are replacement material. A detailed examination of the shingle siding could not be made because of a lack of access.

Figure 6. Decorative wood shingle siding on the north elevation of the 2-story section in excellent condition.

Species Identification

Sixteen samples were removed for species identification. Given the assumed age of the Building, historic materials such as siding would likely have been produced from trees with native ranges extending into Colorado, such as western yellow pine (a hard pine

species group that includes ponderosa pine and lodgepole pine) and/or Engelmann spruce; however, western yellow pine is still used today for architectural siding and trim, so decisions regarding the age of the exterior architectural wood cannot be based on species alone.

Table 1. Wood Species Identification

Sample Number	Member	Location	Species
1	siding	east elevation, shed roof addition	redwood (*Sequoia sempervirens*)
2	window sill	east elevation, shed roof addition	western yellow pine (*Pinus* spp.)
3	vertical window trim	east elevation, shed roof addition	western yellow pine
4	center column	east elevation porch	yellow poplar (*Liriodendron tulipifera*)
5	siding	east elevation, 1 $^1/_2$ story section	redwood
6	window sill	east elevation, 1 $^1/_2$ story section	Douglas-fir (*Pseudotsuga menziesii*)
7	vertical window trim	east elevation, 1 $^1/_2$ story section	western yellow pine
8	siding	east elevation, 2 story section	redwood
9	center column	south elevation porch	yellow poplar
10	siding	south elevation, 2 story section	redwood
11	window sill	west bay window, south elevation, 2 story section	western yellow pine
12	vertical window trim	west elevation, 2 story section	western yellow pine
13	window sill	west elevation, 2 story section	western yellow pine
14	siding	lower level, west elevation, 2 story section	redwood
15	siding	upper level, west elevation, 2 story section	western yellow pine
16	siding	north elevation (under deck)	redwood

Native wood species including western yellow pine and Douglas-fir were identified for window and trim elements. Other tree species that are not native to Colorado were identified for the siding and decorative porch columns. The siding, with the exception of a sample removed from the upper level of the west elevation, was identified as redwood. The decorative porch columns were identified as yellow poplar. The

presence of these species indicates that the majority of the siding and the decorative porch elements are not original to the construction of the Building.

Age of ***Siding and Trim***

Determining the exact age of the siding and trim by visual inspection alone is generally not possible. In conjunction with species identification and historical research and documentation, however, it is sometimes possible to determine the sequence in which materials were added or altered by examining the materials and fasteners in detail. A key identifier can be the type of fastener used to hold wood members or architectural elements together. Wire nails, in common use today, were not widely produced and used in construction until the 1890s. However, in rural parts of the country, common use of wire nails did not occur until after the turn of the 20th century.

While wire nails have flat, circular heads and round shafts, machine cut nails were typically stamped or cut from a sheet of metal, resulting in square or rectangular heads and square shafts. Machine cut nails were primarily used prior to the widespread manufacture and use of round wire nails. Given the assumed ca. 1897 date of construction, the use of machine cut nails would not be unusual; however, all of the visible fasteners on the siding and trim are wire nails (Figure 7). These findings, in combination with the species identification results, suggest that the majority of the siding and trim is replacement material.

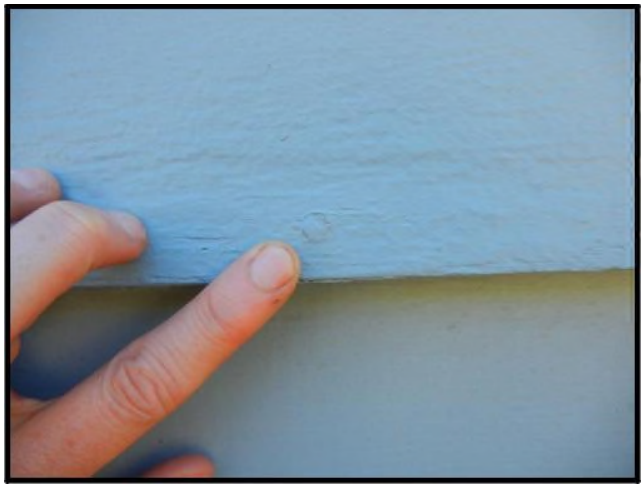

Figure 7. A round wire nail head visible **on the north elevation of the 2-story section.** ***Wood Condition***

Moisture Content Determination

Limited moisture content measurements were taken using a capacitance moisture meter for siding and exterior trim at multiple locations along the building exterior, primarily near ground level, to gain insight into the moisture levels around the perimeter of the

Building. Moisture content measurements generally did not exceed 11 percent in the tested areas indicating that the wood is currently at low risk for deterioration by wood decay fungi. However, the east elevation of the shed roof addition was found to have moisture contents ranging from 8 to 19 percent. The areas of highest moisture content were located near a downspout extension, where moisture build-up may be possible due to the site topography and lack of adequate drainage (Figure 8).

Figure 8. Looking down at the area of high moisture content on the east elevation of the shed addition.

Siding and Trim Condition

The wood siding on all elevations is, in general, in good to excellent condition, with very few areas of failing paint or exposed wood surfaces (Figures 9 and 10). On the west elevation, many of the siding boards on the upper level exhibit some warp, and a few have broken (see Figure 5).

Figure 9. South elevation, west corner showing siding in good to excellent condition. The paneling in the bay window area is a wood fiberboard product.

Figure 10. Siding on the north elevation in excellent condition.

SUMMARY OF THE WOOD INVESTIGATION

The exterior architectural siding and trim of 301 High Street is, generally, in good to excellent condition. There are a few areas of minor weathering and movement in service; in particular, the siding located on the upper level of the west elevation has cupped, warped, and or twisted. Species identification results indicate that the upper level siding on the west elevation is likely historic material. The remaining siding is likely replacement material, based on the visible appearance of good to excellent condition, the presence of round wire nail fasteners, and the non-native species (redwood) identification results.

Moisture contents at the time of the fieldwork were generally under 11 percent, with the exception of one location on the east elevation of the shed roof addition, where a down-spout extension and poor site drainage appears to have resulted in a moisture build-up issue.

Based on the current historical information available and the results of the limited wood investigation, the wood siding on all elevations, with the exception of the upper level of the west elevation, does not date to the estimated period of construction or early modification (ca. 1897-1910). The wood siding in all other areas appears to have been installed in a single repair campaign based on species identification results. The decorative wood shingle siding was not accessible for close inspection, but based on its relatively pristine condition, does not appear to date to the period of construction or early modification. Additionally, the use of wire nails as fasteners indicates that it is very unlikely that the majority of the current siding is part of the original construction.

The likely age of the architectural window trim and the window sashes of the Building is more difficult to determine, given that the wood used in the window trim

construction was identified as coming from local tree species and the window sashes were not accessible for inspection or species identification sampling. The trim may date to the original construction and may have been reused and reattached with wire nails, or may date to a repair campaign, as native tree species are still in use today for the production of architectural trim. The windows appear to have original or historic hardware in place, and are single lite, double-hung windows that are consistent in appearance with historic windows ca. 1897-1910, the assumed period of construction and early modification.

The findings of the wood investigation can be summarized as follows:

- Based on a limited number of samples removed, the existing exterior architectural wood work (including siding and trim) is a combination of western yellow pine *(Pinus spp.)*, redwood *(Sequoia sempervirens)*, and Douglas-fir *(Pseudotsuga menziesii)*,

- The window sashes, with the exception of the window on the east elevation of the shed roof addition, appear to date to the estimated date of construction or early modification based on limited visual evidence of historic window hardware; the majority of the window trim may also date to the period of construction.

- The shed roof addition appears to be a relatively recent modification.
- While the exact age of the existing wood siding cannot be definitively identified based on existing information, based on the wood species used and the use of round wire nail fasteners, it is likely not original to the construction with the exception of the upper level of the west elevation, which was identified as western yellow pine, a locally available tree species group.
- The wood siding is, in general, in good to excellent condition, with the exception of the upper level of the west elevation, where a significant number of boards have cupped, warped, and/or twisted.

APPENDIX

Sketch Plan

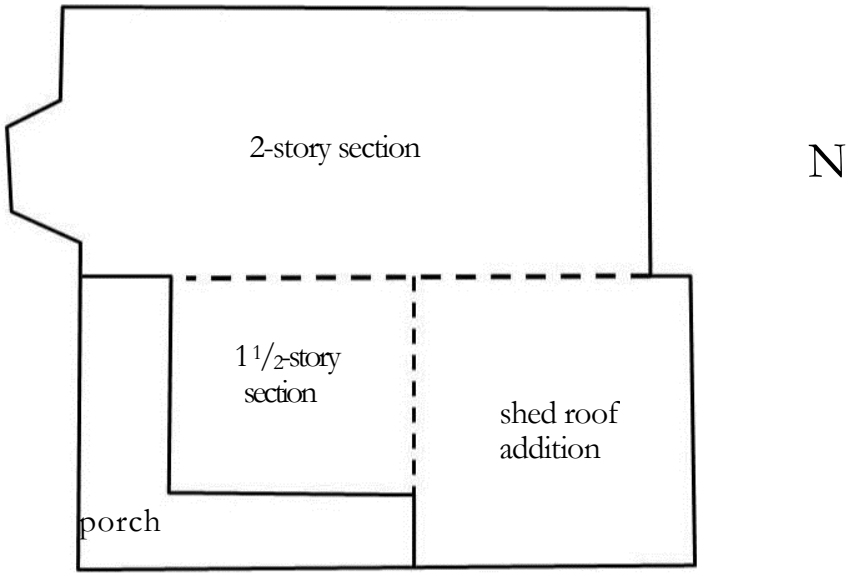

Figure A-1. Plan view of 301 High Street showing the sections and addition discussed in the test. Field sketch, not to scale. North arrow is approximate for ease of reference.

ATTACHMENT E

Technical handouts on historic porches:

1. "ITS Number 9: Interpreting the Secretary of the Interior's Standards for Rehabilitation: Inappropriate Porch Alterations

2. "Preservation Brief #45: Preserving Historic Wood Porches."

National Park Service
U.S. Department of the Interior

Technical Preservation Services
National Center for Cultural Resources

ITS Number 9

Interpreting The Secretary of the Interior's Standards for Rehabilitation

Subject: Inappropriate Porch Alterations

Applicable Standards:

2. Retention of Historic Character
5. Preservation of Distinctive Features, Finishes and Craftsmanship
6. Repair/Replacement of Deteriorated or Missing Features Based on Evidence

Issue: A porch with its balustrade serves as both a decorative and practical feature that can be very important in defining the character of a historic building. However, it is sometimes necessary to alter or replace balustrades during rehabilitation. In some cases a lack of maintenance may have led to irreparable deterioration of this historic feature. In others, railings may be altered or replaced to meet building code requirements. During rehabilitation deteriorated or balustrades that do not meet code requirements, are frequently replaced with new features that completely alter the historic character of the building, and may sometimes also impact the district in which the structure is located.

The Secretary of the Interior's Standards for Rehabilitation clearly address this type of alteration. First, Standard 2 requires that the historic character of the property be preserved, specifically prohibiting the alteration of features that distinguish a property. Standard 5 reiterates this point by requiring that distinctive features and finishes be retained and preserved. Finally, Standard 6 specifically addresses deteriorated features stating that these features should be repaired rather than replaced; however, "Where the severity of deterioration requires replacement of a distinctive feature, the new feature shall match the old in design, color, texture, and other visual qualities and, where possible, materials. Replacement of missing features shall be substantiated by documentary, physical, or pictorial evidence."

Application 1 *(Incompatible treatment)*: A late-19th century boarding house was rehabilitated for use as a bed and breakfast. Prior to rehabilitation the structure had a very simple porch balustrade with rectangular vertical posts, or balusters. Historic photographs provided documentary evidence that the balustrade had always had this appearance. During rehabilitation the balustrade was replaced with one completely different in design - sawn balusters with ornate cutout shapes. The replacement gives a historically inappropriate look to the building, and an appearance it never had. To meet the Standards the owner replaced the new balustrade with one that matched the simple historic design.

Before rehabilitation - simple historical balustrade.

After rehabilitation - inappropriate replacement balustrade.

Application 2 *(Incompatible treatment)*: A Colonial Revival-style apartment building, circa 1920, was rehabilitated for continued multifamily use. The front of the building was distinguished by two porches on the second story with low balustrades consisting of decorative, heavy turned balusters. As part of the rehabilitation, these balustrades, along with a non-original metal railing on the third floor level, were removed because their height did not comply with local building code requirements. They were replaced with taller balustrades with straight, narrow, rectangular balusters that did not replicate the visual qualities of the decorative historic balustrade and, therefore, resulted in dramatically altering the character of the building. These new, inappropriate balustrades were also added to the first floor porch.

The replacement balustrades are not only incompatible with the historic building itself, but they are also not in keeping with the historic district in which the building is located. Many similar apartment buildings in the district feature such porches which, with their rhythm, harmonious scale, size, and proportion, add a distinctive element to the district. Incompatible changes such as these new balustrades can cumulatively and negatively impact the overall character of a historic district.

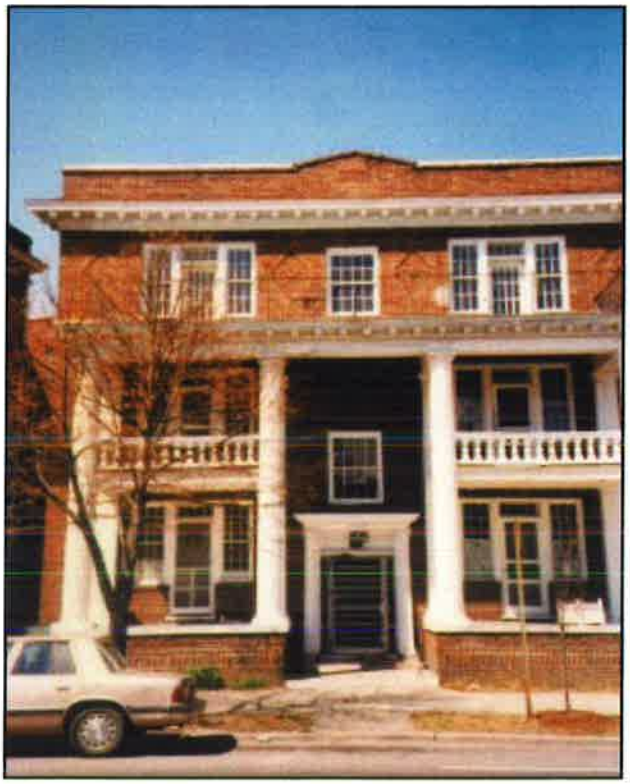

Before rehabilitation.

After rehabilitation.

A more appropriate solution for meeting the safety requirements might have been to raise the existing second story balustrade, and modify the bottom of the railing to reduce the size of the opening. Another approach might have been to add a simple and inconspicuous pipe rail above the historic balustrade to meet the height requirements. From a distance this would not have been visible, and would have preserved the historic character.

There was no documentary evidence that there had ever been balustrades at the first and third floor levels. To satisfy both the Standards and code requirements it would have been preferable had the owner retained the modern metal railing that already existed on the third floor, and added a similarly simple railing on the first floor that was compatible with the building's historic character.

Aleca Sullivan, Technical Preservation Services, National Park Service

These bulletins are issued to explain preservation project decisions made by the U.S. Department of the Interior. The resulting determinations, based on the Secretary of the Interior's Standards for Rehabilitation, are not necessarily applicable beyond the unique facts and circumstances of each particular case.

45 PRESERVATION BRIEFS

Preserving Historic Wood Porches

Aleca Sullivan and John Leeke

National Park Service
U.S. Department of the Interior

Heritage Preservation Services

Few architectural features evoke more romantic notions or do more to define a building's historic character than the American porch. The size, style, detailing, and location of a porch can tell volumes about the age and use of a building. Each component, from handrail or baluster to column or post, enhances the architectural character of the porch. Alter or remove the porch and a historic building or streetscape can lose its visual integrity and historic authenticity (Fig 1).

Functionally, a porch protects an entrance from the weather. Yet open porches are constantly exposed to sun, snow, rain, and foot traffic, and thus subject to deterioration, perhaps more than other parts of a building. Wood porches are particularly vulnerable.

Deferred maintenance and neglect account for the decay and loss of countless numbers of historic porches each year. Deterioration from moisture and resultant wood rot, and damage caused by wood-eating insects are common problems that, when left unaddressed too long, can lead to the loss of significant historic fabric. Inappropriate repairs or insensitive alterations, such as the enclosure of a front porch, can be equally destructive and negatively affect the porch's appearance. All these things can alter a building's historic character. To preserve the character of the porch, as well as the historic building itself, it is essential to plan carefully before undertaking any work on a historic porch.

This Preservation Brief provides guidance for the everyday care of wood porches on older buildings. It focuses primarily on the maintenance and repair of wood porches, but acknowledges other, often challenging, work as well. This publication provides a brief history of the American porch and identifies its basic structural and decorative elements. It outlines how to assess the condition of a wood porch, how much work may be needed, and how to develop a specific scope of work. Detailed guidance on each level of work is provided, beginning with routine maintenance, followed by general repairs for various porch components, and concluding with replacement of parts that are beyond repair. Recommendations are provided for work that may require professional assistance. Although the Brief primarily addresses residential buildings, much of the information can be applied to wood porches on any structure.

Figure 1. Distinctive yet different, these front porches are important features along the street. The rhythm would be diminished if the front porch from one of the houses was dramatically altered or removed. Photo: Aleca Sullivan.

Evolution of the Porch

In colonial America, buildings in the northern colonies tended to echo British precedents with small gable-roofed extensions to protect main entrances. Whether open or enclosed, these extensions were called *porches* (from

Figure 2. Porches not only help define the architectural character of a building but also serve as living areas. They can be designed to take advantage of surrounding views. Cedar Grove, the home of the nineteenth-century landscape painter Thomas Cole, has an L-shaped veranda on the front and a two-story porch on the rear, providing an enviable view of the Catskill Mountains. Photo: Marilyn Kaplan.

Medieval English and the French word *porche*, which stems from the Latin, *porticus*). Also known as *porticos* when supported by columns, these covered entrances were sometimes designed to respect classical order and details, especially on more stylish buildings. Hooded doors or small covered entryways flanked by benches, often called *stoops* (from the Dutch *stoep* for step) that served as short covered transitions to and from the outdoors were common features, especially in New York and the mid-Atlantic colonies.

During the late 1700s and early 1800s as longer shed-roofed porches became more common, they were typically called *piazzas*, as they were then called in England. This term, still popular in some areas of North America, is adapted from the Italian word for open space or plaza. An alternate term for a long open porch, *veranda*, reflects British colonial design influence from the Indian sub-continent.

In French colonial areas, such as the Louisiana Territory, houses were often built with broad roofs extending well beyond the exterior walls to form surrounding porches, known as *galleries*. Porches were also important features of Spanish colonial buildings. In California, for example, many adobe ranches featured a *portal* with the roof supported by wooden posts. African and Caribbean influences can also be found in North American porch traditions.

By the late eighteenth and early nineteenth centuries, porches became more common in larger, wealthier areas such as Philadelphia, Boston and Charleston. In both the North and the South, formal colonnades with tall columns dressed in classical orders were sometimes added to help dignify public buildings, hotels, and mansions. This trend continued through the 1830s and 1840s, as the Greek Revival became the dominant architectural style in many areas of North America.

The social role of porches as a transition space between indoors and outdoors and as a link between private and public realms evolved during the 1800s. By offering grand entrances and sheltered landings with views of the surroundings, prominent porches became expected features of inns, hotels and resort spas, where they could serve as promenades, social gathering spots, and refuges for more private retreats. Porches were also added to private homes to serve many of these same functions (Fig 2). As the country began to thrive and expand, porches became more than just covered entrances or ceremonial features; they became an integral part of domestic social life

Some of the most significant factors that aided this shift were America's industrialization and later suburbanization. As improvements to mass production methods helped spur industrial growth, many Americans had more money to spend and more leisure time. Meanwhile a growing middle class was moving to new suburban neighborhoods. Inspired by the pattern books of Andrew Downing and George Woodward and the published designs of such architects as Alexander Jackson Davis and Calvert Vaux, the homes of these mid-1800s suburban neighborhoods were typically ornamented by elaborate porches dressed with fancy millwork. By this time, millwork catalogues and builders' pattern books offered a wide variety of designs for porch parts. With mass production, these fancy brackets and other ornamentation became less expensive, making it easier and more affordable to construct decorative porches (Fig 3). With mechanized wood turning lathes, the cost of posts, balusters and decorative spindle work also decreased to a level affordable by many. Adding a porch with wood ornamentation could enhance even the smallest and simplest of houses. Even older homes could be modernized with a fancy porch addition, stylized to the latest fashion trends. Such changes culminated in the large, highly decorated wrap-around porches of the Queen Anne style.

The second half of the nineteenth century was the golden era of porches. The social role of the porch increased as it evolved into an outdoor parlor, a true extension of the house into the landscape. Often partially screened by shrubs, porches could provide occupants with discreet opportunities for social contacts that might otherwise be difficult to achieve in an age obsessed with manners and proprieties. For many, sitting on the porch became an important part of their daily routine. Perhaps President Rutherford B. Hayes best summed up the love that Victorian-era Americans felt towards their porches when he recorded in his journal in 1873: "The best part of the present house is the veranda. But I would enlarge it. I want a veranda with a house attached."

By the early twentieth century, the hygiene movement, which stressed that access to fresh air could help prevent or remedy such diseases as tuberculosis, contributed to the development and proliferation of the sleeping porch.

These porches were usually located on the second floor next to bedrooms. This era also saw the rise in use of insect screening on porches to guard against the discomfort of mosquitoes and the diseases they spread, such as yellow fever and malaria.

While innovations fostered the proliferation of porches in the nineteenth century, new inventions helped lead to its decline in the twentieth. As the automobile boom of the early twentieth century made it easier for people to get out of the house for entertainment and relaxation, porches began to lose popularity, especially as architectural styles and social attitudes changed. With the telephone, neighbors and friends could chat without personally meeting. And housing styles popularized in the construction boom after World War II often omitted front porches all together as backyard patios became the focus of private outdoor activities. Finally in the mid-twentieth century the broad availability of air conditioning and television enticed many people to stay inside at night and brought the golden era of the American porch to an end.

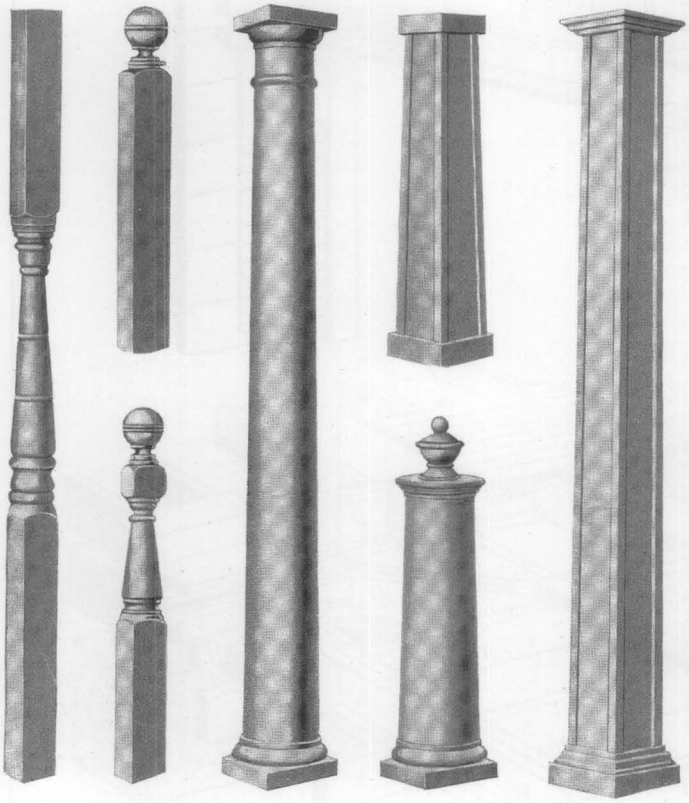

Figure 3. Throughout the late nineteenth and early twentieth centuries, millwork catalogues offered a wide variety of designs for porch parts, including columns, newels, balusters, spindles and brackets. As extolled in the Cedar Rapid Sash & Door Company's Standards Design Book, stock parts made embellishments to porches affordable both for new construction and "updating" existing homes. Courtesy of Charles Fisher.

Understanding the History and Significance of a Porch

In preserving historic buildings, it is important to understand the history and evolution of a particular structure and what features contribute to its historic character. This is especially applicable when working with historic porches since they usually are prominent features, significant to the character of a building.

Answers to the following questions will help establish the significance of a porch.

What has the porch looked like in the past? Early photographs, insurance maps, or tax records can provide useful information. These may be found at city or county offices, historical societies, libraries or even from former owners or neighbors. Such documents may indicate the footprint of the building or show long-lost details of the building's appearance. Physical evidence of historic porch footings may exist. Paint shadows of a former roofline or moldings can provide clues about details now missing. Old porch parts may have been "stored" under the deck during past repairs.

What, if any, changes have taken place to the historic porch over the years? On many porches elements such as columns, balusters, and finish details correspond with the design and detailing on the rest of the house. With other porches, the style of these features may differ from the rest of the building, but may reflect an important chapter in its history. Sometimes, parts of porches may have been lost due to neglect or remodeling. Questions about what historic fabric remains, what has been altered over time, and whether earlier changes are now an integral part of the historic character should be resolved before planning major porch work. Determining the historical evolution of the house may require both physical and archival research and in some cases the professional eye of an architectural historian.

What are the character defining features of the porch? The open qualities are one of the key features of most historic porches. Overall size, shape and design are obviously important components as well. There are numerous other contributing features which may exist, including the shape of the porch roof, the way a large porch is divided into distinct bays as with columns, the nature of the supporting foundation, the style and size of columns and balustrade, and whether the porch is raised or largely at grade. The simplicity of a porch or its richness in detail will also help define it. Materials are usually important as well, not just the wood features, but also whether other materials exist such as masonry columns and steps (Fig 4).

How does the porch contribute to the building's overall appearance? The size and location of a porch and how much of the historic features survive will help define its significance. A highly ornate porch across much of the front facade may be the most distinctive

The Anatomy of a Porch

a - Pier, penetrates ground, supports floor structural system and columns
b - Fascia covering floor framing
c - Floor (or deck)
d - Bed Molding covering joint between fascia and floor
e - Column supporting entablature above

Entablature (f, g, h)
f - Architrave of entablature
g - Frieze of entablature
h - Cornice of entablature

Roof Railing (i, j, k, l)
i - Newel (or Pedestal) of roof railing
j - Balusters of balustrade
k - Top rail of balustrade
l - Bottom rail of balustrade

Balustrade around floor (m, n, o)
m - Top rail of balustrade
n - Balusters of balustrade
o - Bottom rail of balustrade

Structural system of deck (p, q, r)
p - Girder rests on piers and ledgers, support joists
q - Ledger fastened to house sill, supports girder
r - Joist fastened to girder, supports floor

Roof Structural System (s, t, u)
s - Beams inside the entablature span from column to column, support plate
t - Plate of the entablature rests on beams, supports roof rafters and ceiling beams
u - Rafter of the roof structural system

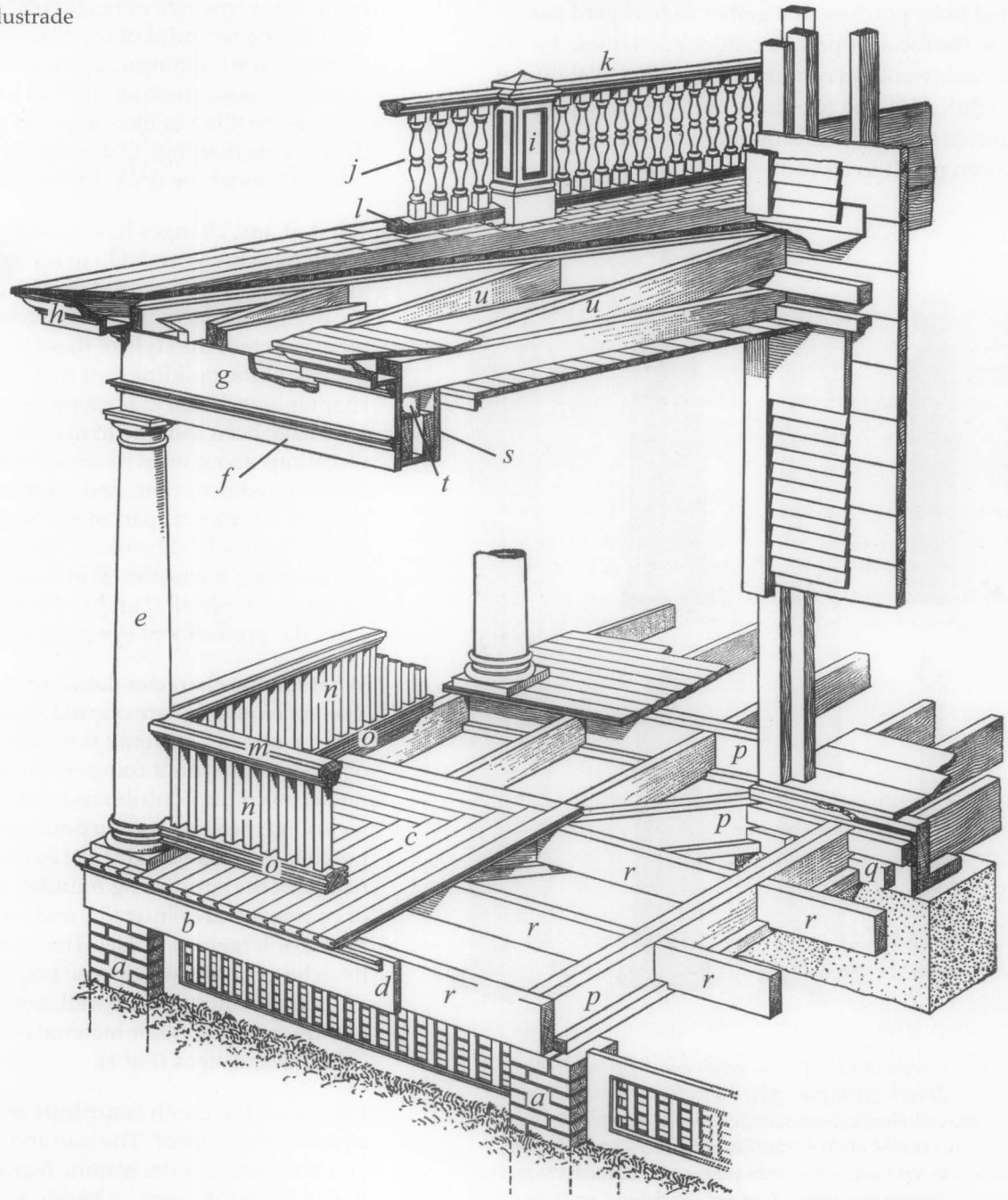

Drawing courtesy of Thomson Education Direct.

feature of the entire house, while a small simple porch on an otherwise plain cottage may be equally significant. The architectural style of a porch may relate to the building and may help define its character. Sometimes a later style porch may have been added to a building or may have replaced an earlier porch. In such cases, the later porch may have acquired importance in its own right. On the other hand, a later porch may be of such poor quality that it detracts from the building's historic character. Because porches are so diverse in terms of style, size, shape and detail, their significance should be assessed on a case-by-case basis with an understanding of the overall importance and evolution of the building.

Assessing the Condition

Before undertaking most repairs, it is important to assess the condition of the porch. The assessment is greatly facilitated if the porch has been regularly maintained and a record of past work is available. In most cases, however, a condition survey must rely almost exclusively on the physical examination of the porch, documenting the findings with notes, photographs or sketches.

Many older porches were constructed using good construction practices and materials. As a result, porches that are over 100 years old are not uncommon. Most porch deterioration can be attributed to the lack of proper maintenance. Important questions to address in assessing the condition of the porch include the following:

How is the porch constructed? A porch is rarely an independent, unattached structure. It may, however, have its own foundation, attached to the house only along the deck and the roof. Alternatively, it may be an included or engaged porch that is integrated with the actual structure of the house. The relationship between the porch and the house is important. If the outer support posts are decayed or if foundation piers are sinking, the roof structure may be pulling away from the house. Many porch decks are fastened to the main building on a ledger, a horizontal board along the house's foundation. A decaying ledger may compromise the structural integrity of the porch and can represent a major safety issue.

Are the foundation and structural members of the deck sound and providing adequate support for the deck, posts and roof above? The porch structure needs to be sound at every level. Therefore, a visual inspection of the underside of the porch is necessary to determine its condition. Major cracks in structural members, failed joints, significant wood rot, or evidence of widespread insect infestations (termites, carpenter ants or powder post beetles, for example) are usually signs of serious structural damage. Such conditions may require consultation with a professional architect,

Figure 4. Celebrating the 4th of July in 1912, this gathering of family and friends reflects the popularity of the porch as a social gathering place. While not overly ornate, each detail of the porch from the roof balustrade to the turned columns to the simple lattice work facing the deck contributes to its character, creating in effect the dominant architectural feature of the building. Photo: © Utah State Historical Society

engineer or building contractor familiar with old buildings. For an adequate assessment, it may be necessary to remove facing boards to check for potential decay in the structural sill behind (Fig 5).

What is the condition of the porch? Porch foundations may be a continuous wall of masonry, a series of masonry or wood piers or metal pipes, or a combination of these. Missing sections of the foundation, crumbling masonry mortar joints, or areas where the sill or joists no longer fully rests on the foundation may represent serious deficiencies. What appear to be deep foundation footings may only be stones or cement blocks sitting on top of the ground. The footings must be stable enough to adequately support the porch in its current or intended use. The smell of mold or appearance of fungal growth on wood beneath the porch is an indication of deficient air circulation and that conditions exist for wood decay. Recent changes that can contribute to deterioration should be identified for correction, such as a clothes dryer vent dumping warm moist air underneath the deck. The enclosure of original air vents in crawl spaces or the boarding up of latticework between piers are other changes that will usually promote an unwanted moist environment.

Are the porch posts providing adequate support? Posts, pillars or columns usually help support the porch roof or an upper deck. Establishing what the posts

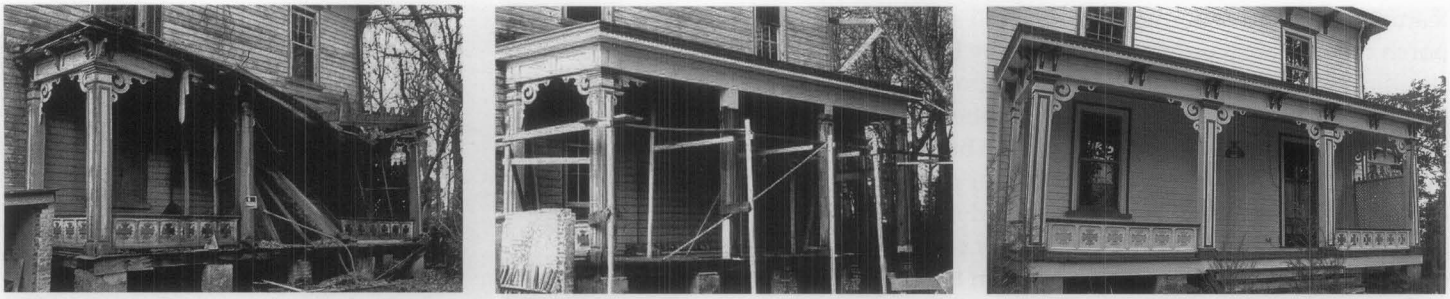

Figure 5. Even historic porches that appear to be in total disrepair may be repairable. While the roof needed replacement, much of this porch was repaired, including such features as the decorative columns, ornamental brackets, and balustrade. Photos: John Leeke.

are made of and how they are constructed will aid in understanding how they function and may deteriorate over time (Fig.6). Although the posts on a wood porch are commonly made of wood, they may be of masonry or metal or a combination of materials. Large round columns usually are made of wood staves similar to the way barrels are constructed; smaller diameter columns may be solid. A sag in the deck below or a faltering foundation can impact the supporting role of a column or post above. Wood columns and posts are prone to water seeping into open joints, particularly in the base and the lower end of the shaft. It is not uncommon to find that older columns have had patches and replacement bases.

Is the roofing and drainage system keeping the water away from the porch? Porches were designed to shed water. This means water will move away both from the building and the porch and not pond and saturate the wood. Continuously high moisture levels promote fungal growth that eventually causes wood to decay. Peeling paint on ceiling boards in a specific location is a sign of a possible roof leak. Clogged or missing downspouts and gutters can cause erosion at the foundation and can contribute to reverse-grade draining that is directing water under the porch instead of into the yard. Inadequately sloped porch floors can result in improper drainage and promote deterioration as exhibited, for example, by cupping floorboards.

What is the flooring condition? The porch component most subject to decay is the flooring. Often decay starts at the exposed ends of the boards or where cracks, checks or open joints have occurred and are exposed to the weather. Flooring should be checked frequently for peeling paint, rotted wood, and for loose, cupping or splintery boards. Where water is ponding, there is insufficient slope away from the building, a condition that should be corrected. Floor deterioration can also start in unlikely places such as the result of frequent hose washing to remove dirt or the placement of plant stands directly on the floor without proper moisture barriers. Firewood stored on a porch may trap moisture on the floor and harbor active insect infestation that can be ruinous to a wood porch. Thick floor mats and carpeting also may trap moisture, leading to premature decay.

Is there evidence of general wood decay? Wood deterioration may take different forms such as fungal decay, insect infestation or even sunlight degradation of exposed unfinished wood. Decay may be present where two wood surfaces meet and are not adequately protected from water, such as along open joints or behind moldings. Dark streaks, discoloration, and widespread peeling paint on a finished ceiling suggest excessive moisture or water leakage. It may be necessary to remove several finished boards to properly identify the cause of the problem and to insure damage has not extended to structural members behind. Trails of carpenter ants are another sign of potential decay since they will infest moist decaying wood. Where inadequate painting has left wood exposed for a long time, damage to the wood surface from light itself will occur, typically indicated by wood discoloration. Without sanding or scraping back to a sound wood surface, repainting will result in premature failure of the paint film.

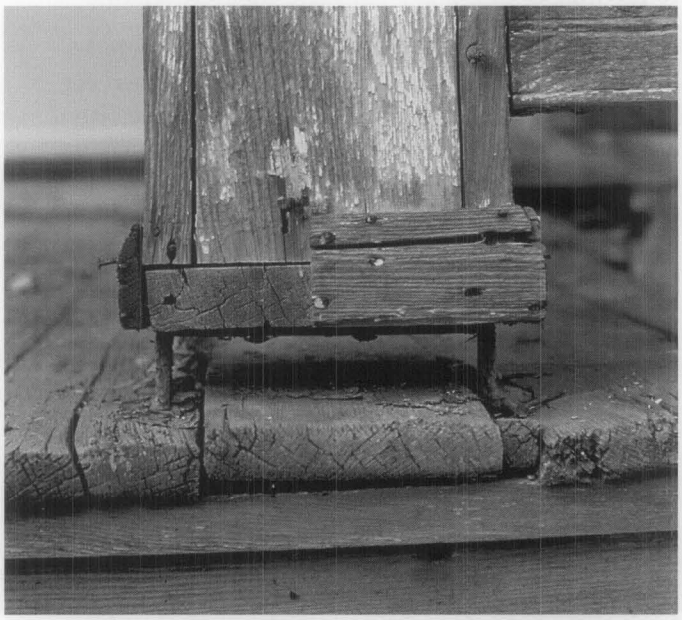

Figure 6. A traditional way to extend the life of porch posts was to place posts on metal feet, thereby providing a separation between the wood post and wood deck. This helped to prevent the wood post from rotting at the base. Early post feet were simple iron bars bent unto a stirrup shape. By the late nineteenth century manufactured cast-iron feet were common, consisting of a pair of disks separated by a short pipe. Post feet are still available today. Courtesy of Old-House Journal/Brian McNeil.

Are there open cracks or joints in the woodwork? Tightly sealed connections keep water out. Where individual boards come together, cracks in woodwork and joints can eventually become a major problem (Fig.7). Cracks are primarily caused by movement and water penetration. Movement of structural members beneath the finished woodwork can shift the position of individual boards and trim, breaking open the thin coating of paint over joints. This condition is common on porches with shallow foundations that are subject either to annual winter frost heaving or where soil conditions undergo major seasonal changes in moisture content. Changes in the moisture content of the wood itself due to repeated wetting and drying or changes in seasonal humidity can also cause noticeable expansion and shrinkage across the width of a board. This provides opportunities for water to penetrate unprotected areas.

Does peeling paint indicate deeper problems? An unbroken layer of paint covering all wood surfaces is the first line of defense against moisture causing decay. Over time, even hairline paint cracks can allow water to penetrate, causing paint to peel down to bare wood. Such peeling occurs near breaks in the film, at opened joints, or where the paint has been scratched or scraped. Peeling can also occur over large areas where there is high moisture and insufficient ventilation. Areas of particular concern include the crawl space beneath the porch deck, inside columns that lack ventilation, and in a roof structure that has a finished ceiling and lacks ventilation. If heavy paint build-up exists on columns, floors and trim, moisture can be trapped within the wood, resulting in the loss of paint adhesions and eventual wood decay.

Are trees, shrubbery and flowerbeds threatening the porch? Shade trees can make the porch a cool oasis, but the branches of a nearby tree rubbing on the roof, gutters or wood trim often will cause damage. Tree roots may destabilize porch foundations or supports. Bushes growing against the porch and not trimmed back on a regular basis may block wood porch components from drying breezes, thereby letting moisture build up in the woodwork. Flowerbeds and mulch around the porch that are not properly sloped downward in a grade away from the house will promote moisture problems.

Defining the Scope of Work

Once the historical and physical assessments are complete, it is important to define the scope of work. How much and what kind of work will need to be done to make the porch structurally sound while preserving its historic character, or to recover its historic appearance if portions are extensively deteriorated, altered or missing? Any part of the porch that defines its historic character should be repaired or replaced to match. Since the porch may display varied levels of deterioration, the spectrum of work in one project

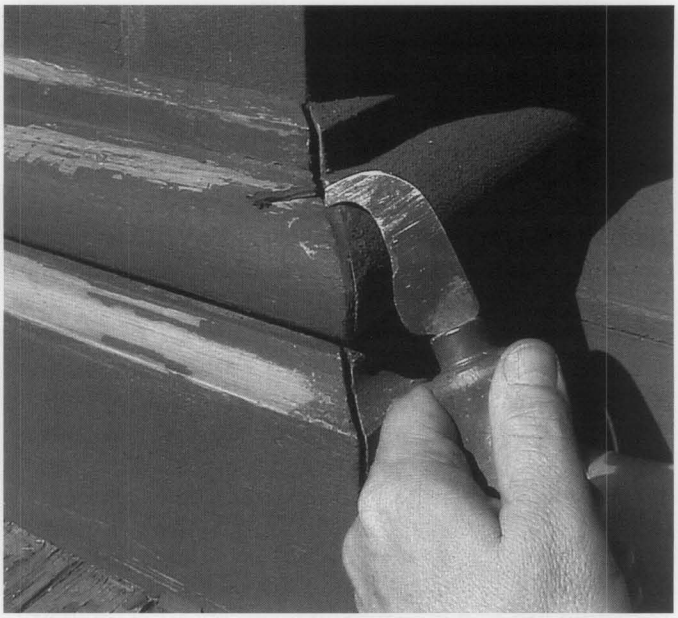

Figure 7. Common problems with porches that can contribute to serious wood decay include cracks in woodwork and joints that have opened up. Both provide an easy path for water seepage. Trapped moisture can foster peeling paint, wood decay and insect infestation. Open joints and cracks should be checked for evidence of more serious decay and marked for caulking or repair. Photo: John Leeke.

can include maintenance, repair, and replacement. When laying out the scope of work for the project, each individual component and decorative element of the porch should be identified, and linked with the work needed for that item.

Undertaking the Work

The highlighted work approaches in this section are based on *The Secretary of the Interior's Standards for the Treatment of Historic Properties* and the *Accompanying Guidelines for Rehabilitating Historic Buildings*. The *Standards and Guidelines* provide a sound philosophical and practical framework for achieving the highest retention of historic materials and character possible. Thus, the familiar hierarchy is applied: maintain, repair, and then replace only if necessary. Contemporary alterations are discussed in a separate section.

Preservation and Maintenance

There are a variety of tasks that can be done on a regular basis to extend the life of a porch. In addition, a visual inspection of the porch should be made every spring and fall to determine if more in-depth repairs are necessary. Fortunately, ongoing maintenance significantly reduces both the need and cost for later repair work and represents good preservation practice. When properly maintained, a well-constructed porch can last for decades.

Routine Cleaning and Other Surface Work
Since many porches are essentially another living space,

extending housekeeping to this space makes practical sense. Regular maintenance includes sweeping the wood porch decking, and, if needed, an occasional damp mopping. Removing dirt and leaves by sweeping is preferable to frequent hosing off the deck with water. The latter can saturate the woodwork, thereby promoting decay. Frequent sweeping will reduce the accumulation of abrasive materials, such as dirt and sand. While visually pleasing to some, vines and plants should be kept trimmed away and not be trained to grow onto or allowed to grow beneath porches. Plants and vines unfortunately reduce ventilation, promote a moist environment for insects and decay, accelerate open wood joints and impede cyclical maintenance. As an alternative, traditional freestanding trellises can be used to support plant growth away from the porch.

There are certain precautions that are recommended for wood floors. Rubber mats, rugs or indoor/outdoor carpeting can trap moisture and condensation on their underneath side and should not be used on a wooden porch floor. Keeping flower pots up off the wooden deck will help prevent moisture buildup and decayed spots – wood, clay or metal "trivets" that hold the pots an inch or more off the wooden deck are helpful, but the pots should be moved to different locations periodically. In colder climates, light snow can be swept off the porch. Snow shovels with a hard rubber leading edge or plastic shovels cause less damage to wood than metal, while paint in good condition helps ice to release more easily. Sand or clean kitty litter can be sprinkled on ice to prevent slipping; however, they should be later swept off the porch, as they are abrasive. Salt (sodium chloride) is not recommended for ice removal on older porches as it can promote corrosion and failure of nails and other fasteners. Magnesium chloride is an alternate de-icing salt that is less corrosive and less damaging to masonry and plants. If any de-icing salt is used, be sure to scrub and rinse off the porch deck in the spring. Boot scrapers and brush-mats at the bottom of the stairs are recommended for muddy areas.

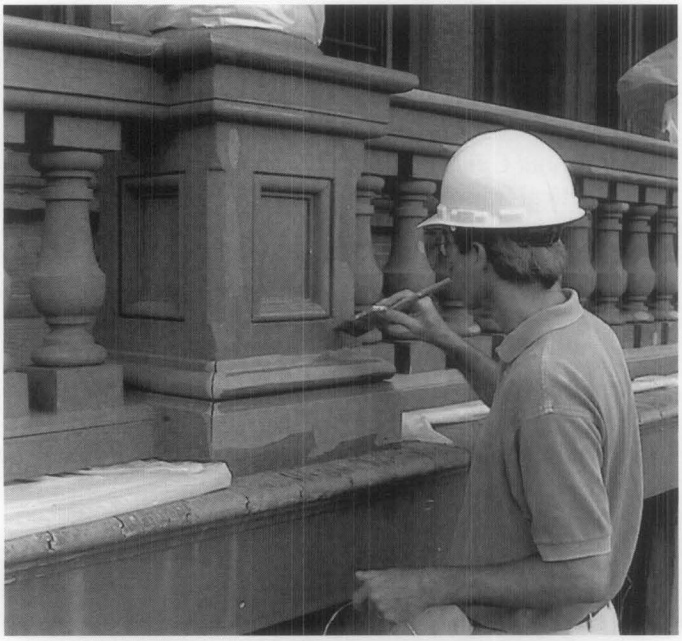

Figure 8. Decay can start when wood is left exposed to the weather or where joints open up. An inexpensive way to extend the life of the existing porch paint without jeopardizing the historic material is spot paint and caulk where needed every year or two. This cost-effective procedure is particularly effective in maintaining wood porches where the exposure to weathering is high. Photo: John Leeke.

Painting

Spot painting and resealing of open joints should be undertaken at least every other year (Fig. 8). Heavily used stair treads may require more frequent paint touchup. When peeling paint or bare wood is evident, inspect to ensure it is not signaling deeper problems, such as decay. With sound wood, scrape off the loose paint, sand, prime, and repaint the area. Where lead paint is present, appropriate lead hazard precautions and procedures apply. Only top-quality exterior primers and paints are recommended, selecting for the deck and stairs specially formulated paints. Where wood porch steps are exposed to moisture, grit added to the wet paint during application will help improve safety.

Repair

Many repairs may be successfully undertaken by property owners, while major projects often require the special knowledge and equipment of an experienced contractor. Repairs generally include patching and reinforcement of historic materials. The roof and foundation are particularly important to the preservation and the structure of a historic porch yet they often receive much less attention than ornamental features. Their neglect will usually lead to more costly work. Repairs to features such as a balustrade or flooring can encompass limited replacement in kind when the porch part is severely deteriorated or when a part of a repeated feature is missing altogether. Some common porch repairs are discussed in this section.

Filling Open Cracks or Joints

To seal open cracks or joints, start by scraping off the paint back a few inches from the opening and removing old caulk to expose bare wood. The opening should be examined for any signs of wood decay, and to determine if the joint is loose due to a loss of connection, such as rusted nails. After correcting any problems, apply a water-repellant wood preservative that can be painted. Such preservatives are either an oil-based or waterborne solution of oils or waxes with mildewcide, fungicide and pesticide added. Then apply a high quality exterior wood primer to the wood surfaces where a sealant or caulk is to be used. Most open cracks or joints then can be filled with a sealant or caulk, while larger ones may need the addition of a backer rod. In some cases, small metal flashing over the crack or open joint may be more effective and longer lasting but, when used, care should be taken with proper installation. The final step is painting.

Patching with a Dutchman Repair
This traditional technique is often used to repair localized cases of decayed wood and, when undertaken with skill and care, will serve as a permanent repair (Fig. 9). If the damaged area has a structural function, temporary bracing or other support will be necessary. Otherwise the first step after removing any paint around the damaged area is to chisel or mechanically remove the decayed wood. It is best to use the same type of wood being replaced and the new or recycled wood should be seasoned to avoid shrinkage. The repair procedure involves cutting a piece of wood, called a *dutchman*, slightly larger than the area of damage that has been cut out. The dutchman then is laid over the damaged area and an outline scribed into the original wood surface below. Next, a chisel or router is used to follow the scribed line to form an opening in the existing wood for the new piece. As a preventive measure, an appropriate fungicide should be applied to the surrounding old wood and allowed to dry. The dutchman is then glued into place with waterproof adhesive, such as an epoxy formulated for wood. The repair is finished by trimming or sanding the surface of the new wood down flush with the surrounding existing surfaces, priming and painting.

Figure 9. The ends of porch roof rafters are often susceptible to moisture decay. When concealed by a soffit or ceiling, rafters can be repaired by adding new sister boards. Where roof rafter ends are exposed, splicing new wood onto the old (dutchman repair) and use of epoxy consolidants and fillers both preserve sound historic fabric while retaining the historic appearance. Photo: Paul Marlowe, Marlowe Restorations.

Patching with Epoxy or Wood Fillers
There are a variety of commercial wood fillers. Cellulose based fillers consist of wood fiber and a binder and have been available in stores for many years. Only those suitable for exterior applications should be used and they will require a protective finish. Epoxies are a more contemporary product, commonly used by experienced contractors and woodworkers. Epoxies are petroleum-based resins created by mixing two components in accurate proportions that result in a chemical reaction. The result is durable, moisture-resistant consolidants and fillers that bonds tenaciously with wood, and can be sawn, nailed or sanded. Epoxies are for use only in areas that will be painted, as they do not take stain and deteriorate under sunlight. Since epoxies are more difficult to work with than other wood fillers, experience working with epoxies is needed for successful repairs.

Repairing Railings and Balustrades
Balustrades and railings are not only practical and safety features, they typically are highly visible decorative elements. Unfortunately, balustrades and balusters are frequently altered, covered, removed or completely replaced even though in most cases they can be repaired in a cost-effective manner. To preserve historic fabric, the repair of old balustrades and railings is always the preferred approach. A broken baluster usually is one in need of repair, not replacement.

Loose railings and balustrades present unsafe conditions and need to be repaired as soon as possible. Start by examining the points of attachment to determine exactly why the railing or balustrade is loose. Common reasons include rusted fasteners, decayed wood, or physical stress that has broken the fasteners or split the wood. Paint and decayed wood must be removed. Where fasteners are broken yet the wood is sound, the balustrade can be re-fastened using hot-dipped galvanized or stainless steel nails or screws, setting the heads of the fasteners below the surface of the wood and using a wood filler to cover and seal. Next repair deteriorated wood by using a dutchman or wood-epoxy repair. The repaired joints then can be sealed and painted.

Replacing Missing Balusters
The balusters help comprise a wood balustrade and come in three general styles: simple rectangular shape; flat, pattern-sawn (usually a board with some decorative edge or cutout); and turned. It may be necessary to replace certain balusters that are beyond repair or missing altogether. Some are easy to replace with new matching balusters while others can be more challenging in terms of both design and costs. Finding or affording replacement balusters may take time since they should match the historic baluster as closely as possible. In the meantime, unsafe balustrades can be temporarily stabilized, introducing temporary new material that soon will be replaced.

In replacing individual balusters, simple, rectangular balusters should not be replaced with pattern-sawn or turned ones unless physical or pictorial evidence survives which indicate they previously existed historically on that particular porch. Such an alteration can change the historic appearance of the porch or be incompatible with the character of the building.

Determine the size and shape of the missing balusters either by examining adjacent ones or temporarily removing an existing baluster as a sample. Heavy paint buildup should be removed so that the original dimension can be established. Scrape and clean the joint locations and make repairs to any deteriorated areas. A new baluster is then fabricated to match the original in design and material, either on site or by taking a drawing or sample to a local woodworking shop. The new baluster should be made one-half inch longer than needed on both ends. Measurements are taken from the bottom surface of the top rail to top surface of the bottom rail. Joints on the new baluster can be laid out with a pencil, using a sliding bevel to transfer any angles, and the new baluster trimmed to fit with a handsaw. After test fitting, the ends and any exposed end-grain of the baluster need to be sealed with a high-grade primer or epoxy. Next, apply a paintable water-repellant coating to all exposed wood surfaces, and apply a primer. The baluster can then be fastened in place with hot-dipped galvanized or stainless steel nails, and the nails set. Finally, seal joints and fastener holes and paint the baluster.

Repairing Column Plinths and Bases

Columns not only enrich the historic character of the porch, they provide support for the roof structure above. Because of their detail and complex construction they can be costly to repair or replace, making maintenance and minor repairs important. Column plinths and bases tend to deteriorate because of their exposed location on the outer edge of a porch (Fig. 10). Leaking gutters can result in water draining into the entablature and down into hollow columns, while clogged or capped gutters can allow water to pour down and splash back onto the column bases. Open joints and limited wood decay can be repaired using methods previously discussed. Column repairs usually are undertaken by an experienced carpenter, since it may involve structural support of the roof above.

Repairing Floorboards and Ceiling Boards

Floors should slope down toward the outer porch edge for proper drainage. If drainage is inadequate, moisture buildup will cause deterioration of the floorboards. Flooring can also deteriorate due to movement in the supporting structure below. If a floorboard is soft or broken, the extent of decayed or split wood can be determined by probing gently with an awl. The existing floorboard can then be removed, cutting the length if needed so that the end will center on the next nearest joist or girder. Once the board has been removed, the structural framing beneath should be examined for deterioration and to ensure it is sound. A new floorboard is then cut to length, and the outer edge shaped to match the adjacent boards. After priming the replacement board, nail it in place and repaint.

If a section of the ceiling is deteriorating, it is likely that there is a roof or gutter problem. To determine the cause of deterioration, inspect the ceiling, gutters and roof, including the internal roof structure. After making necessary repairs, the ceiling boards can be repaired in much the same manner as a deteriorated floorboard.

Repairing the Porch Roof and Gutters

With roof leaks, the entire porch is at risk. Leaks can promote decay in roof rafters, ceiling joists, and columns as well as in areas more easily to detect such as the ceiling and fascia. Inspect the roof covering, gutters and flashing for deterioration and improper performance. They can then be repaired or replaced, as needed, to keep water out of the structure. Avoid having the gutters and downspouts on the main roof drain onto a porch roof.

Repairing the Foundation

Unstable foundation supports can cause serious damage

Figure 10. This nineteenth century porch column is made of wood staves, similar to the way a wood barrel is put together. After replacing the torus and making dutchman repairs to the apophyge along the base, the column and pedestal are ready to be reinstalled on the porch. Photos: NPS files.

to a historic porch. There are numerous causes and solutions. If the posts supporting the porch deck rest on stones or brick set directly on the ground, there can be seasonal shifts due to the changing moisture content of the soil or freeze/thaw conditions that will require regular attention. Under certain conditions, it may be advisable to extend footings for the posts below the frost line. Where moisture problems exist, improved drainage may be necessary. It is not uncommon to find that masonry joints in the foundation wall or piers have deteriorated as a result of rising damp, where moisture from the soil percolates up through mortar joints. This condition may lead to the eventual breakdown of the mortar and even old brick and soft stone. In such cases, it will be necessary to replace the areas of damaged masonry and repoint the mortar joints.

With wooden posts, insect damage or rot may necessitate corrective measures to strengthen the foundation. Techniques can include one or more of the following: epoxy consolidation; dutchman repair; or the addition of supplemental supports to the foundation posts and joists. In some cases damage may be extensive enough that the only real solution is rebuilding the foundation.

Repairing a Porch Apron

The apron, skirt, or latticework is a highly visible and functional porch feature. An apron keeps animals out from under the porch, while at the same time allowing air to circulate, preventing unwanted moisture buildup. Aprons typically are made up of a wood frame, surrounding either a simple lattice or a repetitive pattern of decorative sawn boards. Because the frame is so close to the ground, decay is common. Other causes of decay include plantings around the house that are growing too close to the latticework and improper water drainage. An apron may require partial or complete disassembly for proper repair. One or more of the apron frames should either be hinged or secured with turn buttons for easy access to under a porch for inspection and maintenance.

Replacement

When individual porch parts are deteriorated beyond the point of repair or missing altogether, replacement is necessary. To retain the historic character of the porch, the replacement parts should match the historic component as closely as possible in material, design, color, texture, and other qualities. To achieve this, existing evidence of the historic design, such as a baluster or column detail, or a tongue and groove floor design, should serve as a pattern for the replacement part. When replacing an element, it may provide a good opportunity to upgrade the wood to another species that is more decay resistant, or to one with a vertical grain that is more resistant to cupping or splintering. In limited cases, it may be appropriate to use a substitute material for the replacement material as long as it conveys a close visual match. Before replacing a deteriorated historic porch component, it is important to understand how it was constructed and installed, and what lead to its deterioration. If the replacement part does not sufficiently match the historic part, the character of the porch may be diminished, or even lost. If the cause of material failure is not addressed, the replacement will also fail.

Replacing Porch Floorboards

If a large section of the porch floorboards is deteriorated, the framing beneath may also be damaged and should be assessed. Replacing floorboards can often expand into repairing the structural sills, girders, and joists beneath. Complete floor replacement will likely require the removal of floorboards that are under structural posts or columns. This may necessitate the careful stabilizing in place or the removal of the posts or columns and the installation of temporary support for the roof structure. If the floor failure was caused by inferior wood, the wood quality can be improved at this time. However, the new wood flooring should match the existing in thickness, width, shape and texture. The slope of the floor should be maintained, or a slope may need to be created if none exists. A slope of ¼ inch per foot or greater, away from the house, is needed for adequate drainage. Boards are usually laid in the direction of the slope, sloping down to the outer edge of the floor.

Replacing Steps

Porch stairs receive heavy usage and are close to the ground, making them predictable candidates for deterioration. Stairs should be repaired or, if necessary, replaced by an experienced carpenter who understands the safety codes and is experienced in fabricating custom stair parts to match original detailing without depending only on store-bought parts.

Replacing Column Plinths and Bases, or Entire Columns

When plinths and bases are deteriorated beyond repair, they can be replaced without replacing the column shaft, which may still be in good condition or require only minor repairs at the bottom. Such replacement will involve temporary shoring for the roof. One-story columns and shafts are often more easily removed during this work, while taller columns are sometimes supported in place. If only a few plinths or bases are deteriorated, it is often economical to have new ones made of wood to match. If numerous plinths and bases are deteriorated, replacing with bases made of rot-resistant materials can make economic sense; however, care must be taken to ensure that all the visual qualities including design, size, shape, color and texture of the historic part are matched (Fig. 11).

Entire columns may need to be replaced, but an owner should first consider all repair alternatives. Some contractors routinely recommend complete replacement of one or all columns due to the challenge of a clean repair (particularly with stave-built columns), or because they see the potential for more profit in complete replacement. If a contractor recommends complete

Figure 11. The lower shaft of the porch columns had decayed as water wicked up through the end grain (top). The column shafts were repaired in place by cutting out the deteriorated wood and making repairs using epoxy consolidants and fillers. (bottom). The column bases were replaced. Photos: Paul Marlowe, Marlowe Restorations.

replacement, other opinions should be sought to ensure repair is truly not feasible. Preserving the historic appearance of old columns is not the same as preserving historic columns.

Where a replacement turned or staved column is needed, a local millwork may be able to match the profile or pattern. Alternatively, the Internet is helpful in identifying potential sources of replacement columns that can match the appearance of the remaining ones.

Replacement Materials

Wood

When selective replacement is necessary, the key to success is the selection of suitable wood. Dimensional stability, decay resistance and paint holding ability are wood characteristics that effect durability. Wood that expands and shrinks too much can cause paint to crack. Substances found naturally in certain kinds of wood repel fungi and insects that destroy wood. Selecting wood that is relatively stable and naturally decay resistant helps avoid problems.

The wood from trees cut one and two centuries ago was much different than most wood available today. The mature trees in older forests grew very slowly and, as a result, the annual growth rings were very close together. Today, trees grown by commercial companies for their lumber are fast growing so they can be harvested sooner. As a result, commercially farmed trees have annual growth rings much further apart, resulting in the cut lumber being less strong and decay resistant than older timber. These differences in quality are one of the reasons it makes sense to save old wood when possible.

Wood Selection: When choosing wood for repair and replacement work, the species, grade, grain and environmental impacts should be taken into consideration. This is especially applicable to historic porches because of their high exposure to the weather and vulnerability to decay. The best species are those with good natural resistance to decay, such as redwood, cypress, cedar or fir. A clear (knot free) grade of wood is best; however, if clear wood is not readily available or too expensive, a grade with small or tight knots is acceptable. Finally, the use of more stable vertical grain lumber is preferable to flat grain boards. Vertical grain lumber expands and contracts less with changes in moisture content, resulting in reduce warping and checks. Paint thus will hold better. The downside to using vertical grain boards is the cost, which tends to be as much as two to three times the price of flat grain lumber in the same grade and species. However, this expense is typically recovered through lower maintenance costs over the years. Thus, a decay-resistant, high-grade, vertical grain lumber is the best choice for the replacement of deteriorated porch elements, particularly flooring, stairs and milled elements such as balusters and moldings.

The best species to choose will vary depending on the region the house is located. For example, in the South, cypress is more available, making it the selection of choice in the region. Because of this wood's relative ease with which a carpenter can shape it, cypress is a good choice for replacing brackets and trim boards on a porch. In contrast, vertical grain Douglas fir is less workable, but is a very good choice for the replacement of porch floorboards in most climates. Although Douglas fir is from the Northwest, it is generally available throughout the country. For most protected trim boards on porches, white pine is a good choice as it is easy to work and is moderately decay resistant, especially if the wood is back-primed before installation. Availability of any specific wood will change annually based on market supply and demand.

Wood Characteristics

Species	Cut or Grade	Cost	Workability	Resistance to Decay	Resistance to Cupping	Paint Holding Ability
Redwood	Clear, Vertical-grain, all-heart	$$$	Fair	Excellent	Excellent	Excellent
	"B" Select, flat-grain	$$	Fair	Excellent	Good	Good
Cedar	Clear	$$	Fair	Excellent	Good	Fair
Cypress	Clear	$$	Fair	Excellent	Fair	Good
Douglas Fir	"C" & better, Vertical-grain	$$	Fair to Poor	Good to Fair	Excellent	Fair
Southern Yellow Pine	"D" Select, flat-grain	$	Fair	Fair	Good	Fair
	Vertical-grain	$$$	Fair	Fair	Excellent	Fair to Good
Eastern White Pine	"D" Select, flat-grain	$	Excellent	Fair	Excellent	Good
	Vertical-grain	$$$	Excellent	Fair	Good	Excellent
Poplar	Firsts and Seconds	$	Good	Poor	Good	Fair
American Mahogany	Clear	$$$	Excellent	Excellent	Excellent	Good

This table summarizes the characteristics of just a few of the different species available, including the workability of the wood (indicating a better wood for decorative porch pieces), the resistance to decay (an important feature for all porch components), resistance to cupping (a wood highly resistant to cupping is a better choice for floor board replacement) and paint holding ability. The Cut or Grade is also listed, as a low-grade wood can perform very differently than a higher grade in the same species. Cost will vary depending on region and market supply and demand. In general, it is best to contact two or three local lumberyards to find the available woods with the characteristics needed in the local market. Source: Practical Restoration Report, Exterior Woodwork Details.

Chemically Treated Wood: Chemical wood preservative treatments are available to resist insect and fungal attack, but care should be taken to avoid using ones that may cause environmental or health risks. Borate preservatives can be applied to surfaces or injected to penetrate and protect the entire volume of the wood. Preservatives with zinc napthenate can be applied to the wood surface, where necessary, especially to protect hidden joinery and the end grains of wood. Water-repellants can also be used to help seal out moisture. Finally, primers and paints should be applied to both protect the wood and to maintain the historic character of the porch. Note that these treatments are different than those used on most pressure-treated wood, which is typically a plantation-grown southern pine of lower quality that is impregnated with chemicals. Pressure-treated lumber can be effective when used for hidden structural members like posts, joists and sills. However, because typical pressure-treated wood is very susceptible to the deterioration of checks, warping and splitting, especially when left unpainted, it is not a good substitute for the better quality wood that is needed for visible finish porch parts.

Stock Components

For over a century, prefabricated architectural parts have been sold through catalogues or at home improvement stores. Some companies still make generic, stock architectural components in the same general sizes and designs as those that were first manufactured. These components can be available in both wood and substitute materials. Thus, it may be possible to replace a historic stock component, such as an architectural grade column, with a new prefabricated column that matches the original. Unfortunately, these replacement parts are not designed to match the historic parts of any particular porch. Because traditionally there were many different porch elements, a wide range of styles and considerable regional variations, stock replacement parts available today are not often found to match what is needed in a specific porch repair project. When faced with deterioration of a few porch parts, all the historic material should not be removed in favor of a readily available stock design that does not match the historic appearance. The expressed goal may be to create a porch with a "consistent look," but this approach diminishes the building's historic character and authenticity.

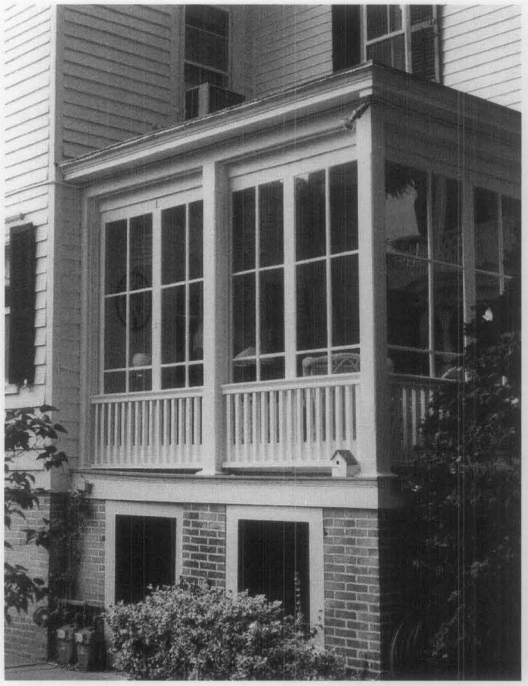

Figure 12. This old porch enclosure, located on the back side of a house, has acquired significance over time and is remarkable both in the appropriateness of its detailing for use by others today, as well as its high degree of maintenance. The enclosure is set behind the columns; the balustrade has been retained; and the light divisions and the size of the glass panes echo that of the windows above. Within each bay there are two well-crafted, inward swinging doors, providing for greater seasonal use of the porch. Photos: Charles Fisher.

Plastic and Composites

A variety of modern materials are marketed today as a substitute for wood. They are usually composite materials typically in the form of plastic resins, including vinyl (PVC), fiber-reinforced polymers and polyester resin. There are other products on the market as well, including medium density wood fiberboard and composite fiber-cement boards. The market is ever changing with the introduction of new synthetic materials and the re-formulation of existing ones. The more costly synthetic products tend to offer the best potential for matching historic features while offering good durability. This means that potential cost savings over new wood tends to be more long term than immediate. Such products generally are not carried in local home improvement stores but rather are available from building supply companies or direct through catalog sales.

The historical significance of a particular property and its porch influences decisions regarding possible use of substitute materials. In general, greater emphasis is placed on authenticity and material integrity when maintaining and repairing individually significant historic properties. However, a front porch that is repeated on rowhouses may be one of the defining characteristics of the historic district and thus of importance to the entire streetscape. So, too, can the location and appearance of a porch influence material decisions, as with, for example, a prominent front porch with ornate detailing as opposed to a small porch over a rear door.

Thus, when the historic porch contributes to the historic character of a building, the particular substitute material that is being considered should accurately match the appearance of the wooden feature being replaced. Composite materials that can be routed or shaped in the field to match specific pieces being replaced have greater potential for use in repairing a historic porch. Materials that cannot be shaped to match the visual appearance of the historic pieces being replaced usually are not suitable for use on historic buildings.

Substitute materials need to be finished to match the appearance of the historic elements being replaced. In nearly all cases, this means that the material should be painted, or where historically appropriate, stained as with some porch ceilings. While there are substitute materials being marketed as pre-finished with either a plain flat surface or generic wood-grain texture, select those that can be painted or stained in the field.

When a substitute material is to be used in conjunction with existing or new wood material, it is important to consider the differences in expansion and contraction due to temperature and moisture changes. Before making a decision, it is also important to understand how a particular substitute material will age, what its maintenance requirements are, and how the material will deteriorate. For example, sunlight can break down exposed surfaces of plastic resins, so painting the surfaces is needed just as with wood. Low and medium density plastic foam parts are easily damaged by abrasion and physical damage, exposing the interior foam to weathering.

Wood porches are just that, porches made out of wood, just as a brick houses are made of brick and cast-iron porches are made of cast-iron. The type of materials used historically in the construction of a building helps define its character. Limited use of substitute materials that closely match missing or deteriorated features may not endanger this historic character, but wholesale replacement with substitute materials usually will.

Considerations for Contemporary Alterations

Enclosures

Much of the character of a historic open porch is clearly its openness. Therefore, in most cases, a historic open porch should not be enclosed. If a porch enclosure is being considered, its significance and location—as well as the nature of the planned enclosure—play key roles in whether it can be done without changing the porch's and building's historic character. While it is almost never appropriate to enclose a front porch on a historic building to create interior space, enclosing a less prominent porch on a less visible elevation could have less impact. In addition, an enclosure should retain as many of the historic porch features as possible (Fig 12).

Insect Screening and Awnings

Traditionally, the seasonal use of porches was extended with screens and awnings. Screened porches have been popular since the advent of inexpensive and durable wire insect screening in late 1800s. Screens were often set unobtrusively behind railings and columns so the decorative components of the porch remained prominent and visible. Since screens can be damaged easily, the screening material was often set in slender, easy to repair, removable wood frames that could be installed during the warmer months, and stored in the winter. When screening a porch today, this historic precedent is recommended. Screened panels should have minimal wood framework painted either to match the porch or in a darker color to make the framing less visible. Decisions on whether screens should be installed inside the porch railings and posts, between the posts, or on the outside will depend on local traditions and on the design of the porch and trim. Screen doors on porches should be sized to fit proportionately with the porch, made of wood, and hung to swing out so insects are not brought inside with use.

Awnings, drop curtains, and valances were common porch accessories during the nineteenth and well into the twentieth centuries. Both functional and decorative, these canvas features helped shield porches from the sun's direct rays, while their colorful stripes embellished and complemented the house's exterior. Some awnings were fixed in place; others were of a roller assembly that allowed owners to easily lower or retract the awning, depending on weather conditions.

Today, modern solution-dyed acrylic fabrics—materials that resemble, but are more durable than canvas—are often used on porch awnings and drop curtains. When new awnings are installed on a historic porch, the selected awning should be appropriate in shape, material, size and color. Care should be used not to damage existing historic porch features such as columns or cornices.

Temporary Enclosures

Temporary enclosures allow a porch to be used in colder months while not permanently altering its appearance. In fact some have become historic features of buildings. Particularly in New England, there is a continuing tradition of installing relatively substantial glass and wood panels on porches during the winter, especially around an entrance door. These tended to have small divided lights. Sometimes porches were fully enclosed with a divided light glass door for entry, creating an enclosed vestibule that reduced the amount of cold air entering the house when the door was opened. Others consisted of simple sidewalls perpendicular to an existing entrance door, serving as a windbreak. Such enclosures were generally removed in the spring (Fig. 13).

In recent years, some porches have been enclosed during the winter with plastic sheeting (polyvinyl) for perceived energy conservation or for creation of an enclosed space. Such a treatment generally diminishes a building's historic character and is not recommended for highly visible porches.

New Permanent Enclosures

Enclosure of a historic porch can result in significant changes in the appearance and character of the building. When considering the possible enclosure of a porch, a number of questions and concerns should be successfully addressed.

Is the porch on a significant elevation of the building?
A porch on a prominent elevation was there to be seen and its open qualities are visually important. Enclosing such a space should be avoided.

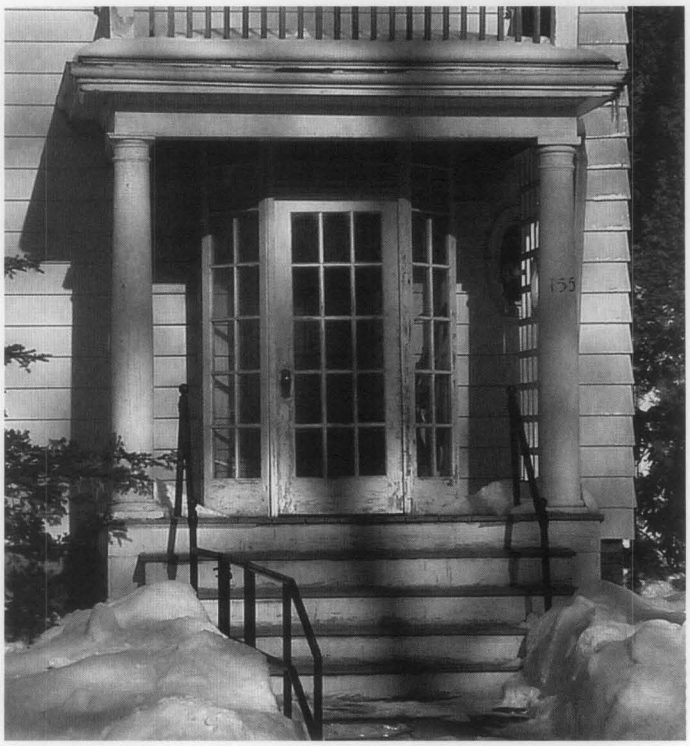

Figure 13. Particularly in New England, there is a cold weather tradition of installing temporary glass and wood panels at entrance doors, thereby creating an enclosed vestibule. These enclosures with their small divided lights were generally removed in the spring. Photo: John Leeke.

Figure 14. The enclosure of a prominent porch can dramatically change the historic character of a building. The L-shaped porch on this 1896 Shingle-style New England residence was later enclosed with aluminum windows and screens. Recent owners elected to reopen the historic porch. Among the other work, it was necessary to correct structural damage, as with this post, where beneath the wood casing carpenter ants had done serious damage. In reopening the porch, the historic character of the residence has been brought back and the traditional use of the porch is once again enjoyed. Photos: Mark Landry, Landmark Services.

Is the enclosure necessary? An enclosure will undoubtedly change the porch as a historic feature and may result in damage or loss of historic materials. Depending on the significance of the porch and the nature of the building, a new porch enclosure may also change the historic character of the building. Consideration should be given to alternate solutions such as recapturing underutilized space in an attic or basement (Fig 14).

Is the porch a highly distinctive feature of the building? Even porches on secondary and rear elevations can be distinctive, such as a two-story porch on the side ell of a farmhouse. Porches ornamented with decorative trim that embellishes the house can also be distinctive. Enclosing these features should also be avoided whenever possible.

Is the porch a feature repeated on a row of buildings in a historic district? Open front porches on a block of row houses can be not only important to an individual building but can also make up a significant feature of the streetscape. Enclosing such a porch usually is inappropriate even if a porch on an adjacent building already has been enclosed.

Will the proposed enclosure encompass the entire porch? History has shown that the enclosure of a portion of a porch on a secondary elevation does not always alter the character of a building. In the past as indoor plumbing was introduced to old buildings, the partial enclosure of a one or two-story porch on a secondary elevation was a convenient means of providing new bathroom space while limiting disruption to the building's interior. Since early bathrooms were traditionally small in size, most of the existing porch could be retained as open space. It was common to create new walls set either between columns or behind them, since the columns usually served a structural as well as decorative purpose. Where sleeping porches with full-length louver shutters were present, the new wall could simply be set behind and the shutters retained and fixed in place. In both cases the resulting effect minimized the impact of the partial enclosure on the appearance of the building. This also provides us with an approach that may be appropriate for a particular project today.

Will the enclosure result in the loss of considerable historic fabric? Unless the historic porch is so deteriorated that it is beyond repair, any consideration of enclosing all or part of a porch should incorporate retention of historic fabric. This may mean that the existing structural system needs to be augmented but generally not replaced. Distinctive features such as columns, brackets and balustrades should be retained and the new wall set behind them.

Is the foundation adequate for the enclosure of the porch and the new use of the space? Porches were often built on simple posts or piers, some with only minimum footings. Such structural supports may be inadequate to carry the added load of the proposed changes and the typical low space beneath a first floor porch may make installing a new porch foundation difficult and expensive. Such installations may result also in an extensive loss of historic fabric.

How will the proposed enclosure be viewed from the outside once the interior space is furnished? One of the approaches to enclosing a porch is to utilize near full glazing set behind existing columns in an attempt to retain a feeling of transparency. Whether such a treatment is successful depends on how it will look once it is constructed and how will the appearance on the outside be impacted by interior lighting,

mechanical systems and furnishings. The traditional use of plantings and porch awnings for shade also provided extended privacy. If historically appropriate, an existing or new awning and plantings may help to reduce the impact of a porch enclosure on a secondary but visible elevation.

Is the design of the proposed porch enclosure in keeping with the historic character of the building? Where the enclosure of all or part of a historic porch is appropriate, the selection of a compatible design and materials is important. Windows, doors, and wall material selection, along with how the new infill fits within the existing porch, are all factors to consider. A traditional technique of porch enclosures still used today involves the insertion in each column bay of one or more glass enclosures set in wood frames. The enclosures are located between or behind the columns, depending upon the nature of the porch, and mimic the pattern or size of glass panes found in historic windows on the building (Fig 15). An alternate treatment involves the use of much larger sheets of clear, non-reflective glass recessed behind the porch supports, balustrade and railing. This more contemporary treatment may be appropriate, depending upon the historic character of the building, location of the porch, and other factors (Fig 16). Windows, doors, and wall material selection, along with how the new infill fits within the existing porch, are all factors to consider.

Safety and Building Codes

There are many building codes used by states and municipalities across the nation, with a majority of their requirements being very similar and focused on new construction. Building codes such as the International

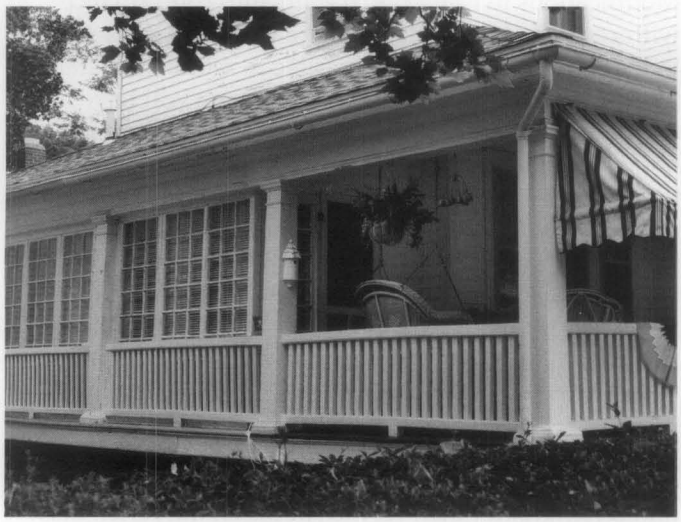

Figure 15. A traditional technique of porch enclosures still used today involves the insertion in each column bay of one or more glass enclosures set in wood frames. This enclosure is properly set back an entire porch bay from the front of the house and utilizes traditional light divisions and wood frames. The balustrade, added here for illustration purposes, shows the importance of retaining this linear feature within the enclosed bays. Photo: Charles Fisher.

Figure 16. The use of near full glazing to enclose a porch may be appropriate depending upon the historic character of the building, location of the porch, how the interior space is to be treated, and other factors. This enclosure of a rear porch to create a conference room successfully utilizes large expanses of glass and narrow metal framing set behind existing porch elements (a through e). Where an additional horizontal support was needed (f), the frame was placed at a location that is found in many traditional insect screen enclosures. Photo: Charles Fisher.

Building Code and its companion, the International Existing Building Code, have been developed in recent years that are generally much more sensitive to existing and historic buildings, emphasizing the retention of historic fabric without jeopardizing life safety. These "proportional codes," as they are called, allow building inspectors greater flexibility to make decisions based on the specific circumstances of each building, and the type and extent of work planned.

Successful rehabilitation work achieves a balance between building and safety code considerations and the retention of historic design and materials. The porch is no exception. The most common porch elements affected by code requirements are railing/balustrade height, baluster spacing, stair geometry, and structural system. When a historic porch is so deteriorated that a substantial portion must be replaced, modern building code requirements are usually triggered. These requirements are often more stringent for multi-family or commercial structures than single-family houses.

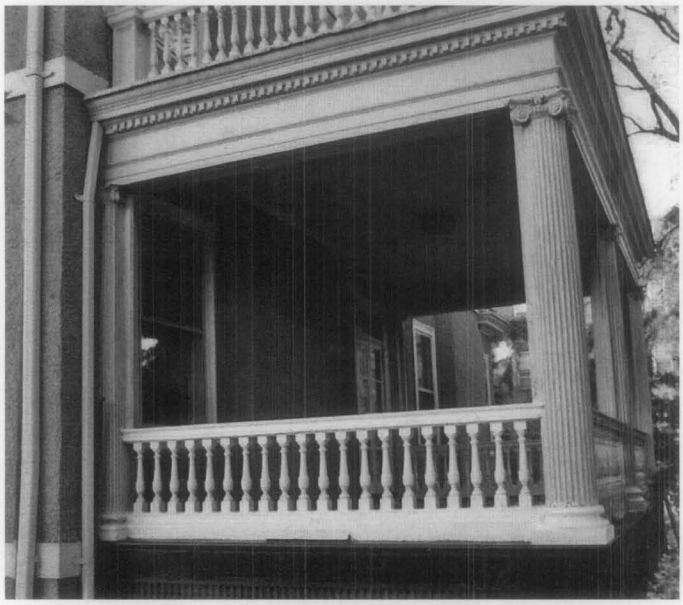

Figure 17. The porch's structural system must be capable of supporting today's loads. In this case moisture led to the deterioration of the wood girder at the corner, creating a major structural deficiency (top). A new solid timber was installed to replace the girder (middle); alternatively a built-up girder could have been used since a fascia board would conceal it. The column base was repaired and portions replaced and the balustrade and column reset and secured (bottom). Photos: Paul Marlowe, Marlowe Restorations.

It is important to ensure that the code-required work be done in a manner that is sympathetic to the historic character of the building. If building code requirements threaten the historic character of the porch, alternatives that reconcile the two should be explored. Many local jurisdictions issue waivers or variances for historic buildings, allowing for historic elements to be retained, when it can be demonstrated that safety will not be compromised.

In the event that an alteration to a historic porch is required to make the porch safe to use, care should be taken in planning and undertaking the work. Fortunately, there are usually a number of options that are possible, although one is usually the most appropriate preservation solution.

Structural Loads

Ensuring that the structure's foundation can support the specified load is a primary safety issue for porches. Fortunately, repairs and upgrades to improve structural stability are generally made to the foundation at or below grade, and can usually be concealed under the porch or behind finish details. Weakened joists can often be strengthened with the addition of sister joists, epoxy structural repair, or the insertion of new concealed structural members (Fig. 17).

Stairs

Historic stair risers are sometimes too steep and treads too shallow to meet contemporary building codes or the special needs of the occupants. In the latter case, the addition of a simple handrail that meets code may suffice. In instances where there is another stairway that meets code, for example a side stair, it may be possible to retain the existing non-conforming historic stairway.

Modifications to bring porch stairs into conformance with code can be difficult. Where buildings are set close to the street, it may not be possible to rebuild the stairs in the same direction to meet code if they will have to extend onto a public sidewalk. Unless a variance is obtained, it may be necessary to turn the stairs to be parallel rather than perpendicular to a building. Where wood stairs need to be rebuilt, the historic finish details, such as moldings, cut work and edge detailing, should be reflected in the new construction. One common mistake is the replacement of wood stairs or brick steps with concrete, a material that may not be in keeping with the historic building.

Where a porch must be used as a wheelchair accessible entrance, two general issues arise. If there is an elevation difference greater than ½- inch between the porch deck and the front door threshold, a simple threshold ramp may suffice. In cases where the elevation difference is larger than can be accommodated by a simple threshold ramp, a level platform with sufficient turning radius at the door for a wheelchair may be necessary. The other issue is devising a means for wheelchair access from the grade to the porch deck when the porch is the only

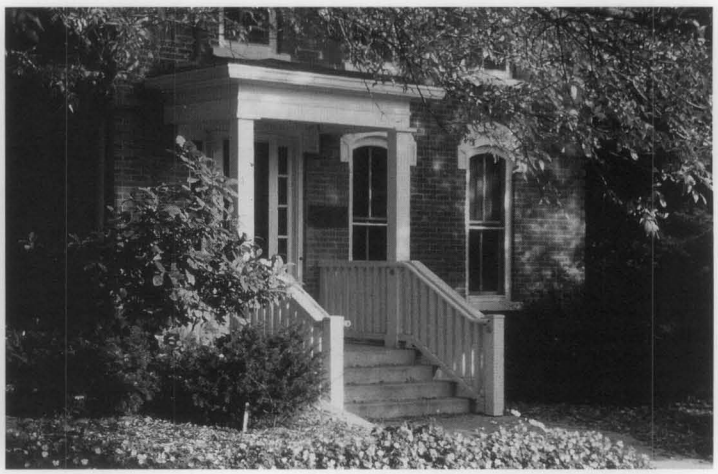

Figure 18. When a porch is used as a wheelchair accessible entrance, it may be possible to retain the historic stairs by adding a ramp parallel to the building. Through plantings and some re-grading, the new ramp built parallel to the building (left) allows retention of the historic stairs and does not impact the historic character of the entrance (right). Photo: Iowa State University Extension.

entrance alternative. It may be possible to retain the historic stairs by adding another entrance to the porch with the construction of a ramp parallel to the building (Fig. 18).

Baluster Spacing

Codes generally require for children's safety that new balusters are spaced such that a four-inch sphere cannot fit through. Vertical balusters on older porches are often spaced farther apart than this. If modifications are required, inserting narrow metal rods between the existing balusters may be a compatible and inconspicuous solution, particularly if painted flat black or another dark color. This is generally preferable to moving the balusters closer together or adding more balusters to fill the gaps.

Railing/Balustrade Heights

Historic porches generally have handrails that measure 28 to 30 inches in height from the floor. Current code requirements for new construction generally mandate that railings be 36 to 42 inches in height (often 36 inches for single family dwellings, and 42 inches for multi-family dwellings and commercial buildings). Raising the historic railing by as much as 30% or more can have a major impact on not just the proportions of the balusters, but also on the overall appearance of a historic porch. Adding a simple rail above the historic railing and painting it to hide its presence as much as possible is generally the least intrusive solution when this safety requirement must be met. Similarly, an existing bottom rail is sometimes set too high off the deck to meet contemporary code requirements. The addition of a simple wood rail or even a narrow metal pipe below the bottom rail will usually suffice (Fig 19).

It is not uncommon to find historic porches with decks only several steps off the ground and with no railings. For owner-occupied residences undergoing rehabilitation, local codes usually will not require the addition of railings to these existing porches, provided the porch deck is below a certain height off the ground—typically from 18 to 24 inches. Where greater safety is warranted even though no railing is required, alternatives such as planting an adjacent hedgerow, installing planter boxes between columns, or raising the grade are worth considering. Where not practical or acceptable, a railing might be added so as to not noticeably impact the appearance of the historic porch. Any solution, however, should be simple and based on the character of a specific porch, and its appropriateness considered on a case-by-case basis.

Figure 19. Historic porches generally have railings that measure 28 to 30 inches in height from the floor. When additional height is necessary for safety, a simple rail, added for illustration purposes in this photograph, can usually be installed above the historic railing. Not only does this treatment allow retention of the historic balustrade, but it also has a minimum impact to the appearance of the porch. Photo: Charles Fisher.

Conclusion

Wood porches have made an enduring contribution to our built environment. Porches are significant because of the special character they impart to a historic building and their role in our social and cultural history. A porch is an open sheltered part of a building, providing a covered entrance and, where larger, serving as an outdoor activity room. It represents an outward extension of a building, a place guests can initially be sheltered from the weather, even welcomed and entertained.

Like all historic building features, wood porches require routine maintenance to prevent decay. Understanding how a porch is put together and the factors that cause deterioration will help considerably in carrying out both maintenance and needed repairs. Regular maintenance pays off not only with a good appearance but also by reducing the need for future repairs. With both maintenance and repairs, emphasis should be placed on preserving the historic fabric and significant features of a porch. Where components are deteriorated beyond repair or missing altogether, new pieces should be installed that match the historic ones. Fortunately, good craftsmanship and the use of quality replacement materials as needed will be rewarded with repairs that last. Attentive care will result in the historic porch retaining its charm both in appearance and in function.

Bibliography

Davis, John Michael. "Exterior-Trim Details That Last," *Fine Homebuilding*, August/September 2001.

Fisher, Charles E. and Hugh C. Miller, eds., *Caring for Your Historic House*, New York, NY: Harry N. Abrams, Inc., 1998.

Kitchen, Judith L. *Caring for Your Old House: A Guide for Owners and Residents*, Somerset, NJ: John Wiley & Sons, Inc., 1991.

Leeke, John C. *Practical Restoration Reports Compendium*, Portland, ME: Historic HomeWorks, 2005.

Nash, George. "Renovating Old Porches: Common Problems Can Be Solved With Simple Repairs," *Fine Homebuilding*, July 1982.

Preservation Briefs, Washington, DC: National Park Service, Technical Preservation Services: 1978—present.

Preservation Tech Notes, Washington, DC: National Park Service, Technical Preservation Services: 1984—present.

Reed, Douglas C. "Detailing Early Porches," *Old House Journal*, May/June 2001 and July-August 2001.

Visser, Thomas D. *Porches, Piazzas & Verandas*, forthcoming.

Weeks, Kay D., and Anne E. Grimmer. *The Secretary of the Interior's Standards for the Treatment of Historic Properties with Guidelines for Preserving, Rehabilitating, Restoring & Reconstructing Historic Buildings*, Washington, DC: National Park Service, 1995.

Acknowledgements

John Leeke is a Preservation Consultant in Portland, Maine; Aleca Sullivan is an Architectural Historian in Evanston, Illinois. Cover illustration: Indiana Historical Society, Jay Small Postcard Collection, Standard Cottage, 1886, Bethany Park, Indiana, Collection No. P0391, digital image C 2003.

Numerous individual generously provided their time and shared their knowledge in making this *Preservation Brief* possible. Thomas D. Visser, Historic Preservation Program, University of Vermont, deserves special recognition for his insightful contributions. Also gratefully acknowledge for their assistance in reviewing this publication are Neal A. Vogel, Restoric LLC and Judith L. Kitchen, Ohio State Historic Preservation Office. Thanks go to Marilyn Kaplan, Preservation Architecture, for her contributions to the code section of this publication. Special thanks also go to the following staff of the National Park Service's Technical Preservation Services office for their review and assistance: Sharon Park, FAIA, Michael Auer, Anne Grimmer, and particularly to former staff Kay Weeks. Thanks also go to Chad Randl, Kaaren Staveteig and Liz Creveling of the National Park Service's Technical Preservation Service for their assistance and to Peter de Paola, Mark Landry of Landmark Services, and Paul Marlowe of Marlowe Restorations.

This publication was under the technical and editorial direction of Charles E. Fisher of the National Park Service's Technical Preservation Services whose considerable contributions, including that of the section on new permanent enclosures, helped made this publication possible.

This publication has been prepared pursuant to the National Historic Preservation Act, as amended, which directs the Secretary of the Interior to develop and make available information concerning historic properties. Comments about this publication should be addressed to: Charles Fisher, Technical Preservation Publications Program Manager, Technical Preservation Services—2255, National Park Service, 1849 C Street, NW, Washington, DC 20240.

This publication is not copyrighted and can be reproduced without penalty. Normal procedures for credit to the authors and the National Park Service should be provided. The photographs used in this publication may not be used to illustrate other publications without permission of the owners.

For more information about the programs of the National Park Service's Technical Preservation Services see our website at www.cr.nps.gov/hps/tps

October 2006

RESOLUTION 94-2014

A RESOLUTION APPROVING A CERTIFICATE OF APPROPRIATENESS FOR THE EXTERIOR REHABILITATION AND SITE WORK FOR THE PROPERTY LOCATED AT 401 CHASE STREET

STATE OF COLORADO
COUNTY OF GILPIN
CITY OF BLACK HAWK

Resolution No. 94-2014

TITLE: A RESOLUTION APPROVING A CERTIFICATE OF APPROPRIATENESS FOR THE EXTERIOR REHABILITATION AND SITE WORK FOR THE PROPERTY LOCATED AT 401 CHASE STREET

NOW, THEREFORE, BE IT RESOLVED BY THE BOARD OF ALDERMEN OF THE CITY OF BLACK HAWK, COLORADO, THAT:

Section 1. The City Council hereby determines to approve a Certificate of Appropriateness for the exterior rehabilitation and site work for the property located at 401 Chase Street.

RESOLVED AND PASSED this 10th day of December, 2014.

_____
David D. Spellman, Mayor

ATTEST:

_____
Melissa Greiner, City Clerk

CITY OF BLACK HAWK
REQUEST FOR COUNCIL ACTION

CITY COUNCIL MEETING: December 10, 2014

SUBJECT:
Certificate of Appropriateness for Full Exterior Rehabilitation and Site Improvements for 401 Chase Street
The applicants, Josh Smith and Mary Keefhus, are requesting approval of a Certificate of Appropriateness (COA) for full exterior rehabilitation of the historic dwelling and site improvements for the property at 401 Chase Street.

CONSULTANT COMMENTS
The exterior rehabilitation and site work described on page 3 of this report require a Certificate of Appropriateness. The consultant's evaluation of the proposal finds that some elements of the proposed work are not in accordance with the City of Black Hawk Residential Design Guidelines and the U.S. Secretary of the Interior's Standards for Rehabilitation. These include:

- Enlargement of one of the primary door openings (a character-defining feature).
- Replacement of all historic doors instead of rehabilitating the doors.
- Replacement of all historic windows with metal-clad windows. .
- Replacement of all siding although investigation shows some of the siding to be in good condition.
- Changing the height and location of some of the stone retaining walls.
- Installing a large concrete patio area on the front and side of house.

HISTORIC PRESERVATION COMMISSION RECOMMENDATION
The Historic Preservation Commission (HPC) evaluated the application, the comments in the report, and testimony by staff, consultants, and the applicant. The list of non-conforming elements in the previous section served as a starting guide for the Commission's discussion. Following is the result of that discussion:

- Enlargement of one of the primary door openings (a character-defining feature).
  Door No. 1 is the selected location for enlargement and found acceptable by the Commission. Location is not readily visible from the public right-of-way.
- Replacement of all historic doors instead of rehabilitating the doors.
  Condition of the current doors is poor. Replacement doors were found to be acceptable and commonly seen throughout the National Historic Landmark District.
- Replacement of all historic windows with metal-clad windows.
  The Commission reviewed the window survey which noted the wood elements of the windows were estimated to be historic and possibly dating from the original construction. However, most of the glazing has been replaced, with the exception of the east elevation

of the window, which is historic. The Commission agreed the expenditure of public funds would be better spent on the replace windows rather than repair of the current windows.

- Replacement of all siding although investigation shows some of the siding to be in good condition.
  Since the wood survey report summarized that the siding was likely not original to the date of construction, the Commission agreed the siding could be replaced.
- Changing the height and location of some of the stone retaining walls.
  The existing stone walls on the west side of the house will be rebuilt, but not at the same height or location. A new stone retaining wall will be built to connect the rear patio retaining wall to the concrete retaining wall behind the house. The historic retaining wall on the west side of the patio will be demolished due to grading changes required for patio construction. Although this does not meet the design guides, the Commission determined that due to the existing topography and the desire to protect the structure from the existing hillside, the change in height and location would be minimal and unnoticeable from the right-of-way.
- Installing a large concrete patio area on the front and side of house.
  The Residential design guidelines do not address patios. Although the west patio is not highly visible from the public right-of-way; the front patio will be more visible. Additionally, concrete is not a preferred land reclamation method as outlined in the design guidelines. Keeping this in mind the Commission agreed from a maintenance perspective concrete in this area was a good choice. The east side of the house still maintains a grassy area with mature trees.

The Commission next discussed if there is sufficient evidence that the Certificate of Appropriateness application meets the intent of the criteria outlined in the City of Black Hawk *Historic Restoration and Community Preservation Fund Guide to Programs*, Section 16-368 of the *Black Hawk Municipal Code*, and Sections 2, 3, 4, 5, and 7.4 of the *City of Black Hawk Residential Design Guidelines*.

At the conclusion of its discussion, the Historic Preservation Commission recommended to the Board of Aldermen ***APPROVAL*** of the Certificate of Appropriateness for full exterior rehabilitation and site work at 401 Chase Street based on the criteria set forth in the staff report dated December 2, 2014. The Certificate of Appropriateness application for 401 Chase Street meets the intent of the criteria outlined in the City of Black Hawk Historic Restoration and Community Preservation Fund Guide to Programs, Section 16-368 of the Black Hawk Municipal Code, and Sections 2, 3, 4, 5, and 7.4 of the City of Black Hawk Residential Design Guidelines.

The Historic Preservation Commission also provided direction that if any minor product, materials, or color changes that meet the design guidelines can be approved by staff administratively.

STAFF RECOMMENDATION

Staff recommends to the Board of Aldermen **APPROVAL** of the Certificate of Appropriateness for full exterior rehabilitation and site work at 401 Chase Street based on the criteria set forth in the staff report dated December 2, 2014. The Certificate of Appropriateness application for 401 Chase Street meets the intent of the criteria outlined in the City of Black Hawk Historic

Restoration and Community Preservation Fund Guide to Programs, Section 16-368 of the Black Hawk Municipal Code, and Sections 2, 3, 4, 5, and 7.4 of the City of Black Hawk Residential Design Guidelines.

RESOLUTION DATE:	December 10, 2014
ORIGINATED BY:	Community Planning and Development
STAFF PERSON RESPONSIBLE:	Cynthia L. Linker
DOCUMENTS ATTACHED:	Staff Report and Attachments A-D
CITY ATTORNEY REVIEW:	[ ] Yes [X] No [ ] N/A INITIALS_____

SUBMITTED BY:	**REVIEWED BY:**
12/04/14	
Cynthia L. Linker, CP&D	Jack D. Lewis, City Manager

CITY OF BLACK HAWK	Report Date:	December 2, 2014
PLANNING / LAND USE	HPC Meeting Date:	December 2, 2014
	City Council Meeting Date:	December 10, 2014

STAFF REPORT:

For:	City Council
Project:	Certificate of Appropriateness for Full Exterior Rehabilitation and Site Improvements
Property Address:	401 Chase Street
Property Owner:	Josh Smith and Mary Keefhus
Zoning:	Historic Residential (HR)
Prepared by:	Deon Wolfenbarger, Historic Preservation Consultant
Approved by:	Cynthia Linker, City of Black Hawk

BACKGROUND

The applicants, Josh Smith and Mary Keefhus, are requesting approval of a Certificate of Appropriateness (COA) for full exterior rehabilitation of the historic dwelling and site improvements for the property at 401 Chase Street.

The estimated date of construction for the house at 401 Chase Street is ca. 1890. The property was first evaluated in 1986 when the National Park Service conducted a survey of historic resources in the communities of Black Hawk, Central City, and Nevadaville [see Figure 1]. In 1991, when Black Hawk was added to an expanded National Historic Landmark district, 401 Chase Street was counted as a "contributing" building to the historic district, meaning it had retained sufficient integrity to contribute to the historic character of the district. The 1986 survey provided the following description of the main building:

> This 1-story L-shaped wood frame house has a low stone foundation, horizontal siding, a rolled asphalt intersecting gable roof, box cornice, and 2 interior brick chimneys. Distinctive features are cornerboards and wood lug sills. The windows are rectangular, wood double-hung sash. Both the primary and secondary doors are single, wood, paneled. The primary door has 1 light and the secondary door 2 lights in the door panel.

Figure 1. Photograph from 1986 survey.

In 1981, a 10'x12' shed was added to the property; this is less than fifty years old and is not eligible for grant funding [see Figure 2 for pre-shed photo and Figure 3 for current photo]. There is mining waste behind the house and on the west, presenting potential environmental problems. Site work addressing this issue will be handled in a separate project.

Figure 2. Photo from Gilpin County assessor's office, no shed on west (right) side and a hip roof over the western addition.

Figure 3. Current conditions, showing shed and mining waste behind the house and on the west

This property has never received grant funds from the city's programs. In 2010-2011, a re-survey and evaluation of the historic district found that property was still "contributing" to the National Historic Landmark district. Any alterations to the building should be reviewed for their impact to the building's contributing status.

The applicants are requesting approval of the following work, which requires a Certificate of Appropriateness:

Site work

- Demolish non-historic shed.
- Stone retaining walls: retain wherever possible and rebuild only as required for utility replacement, stairs, and for documented structural failures. Replaced walls to match existing. Stone walls around the demolished shed will be removed. Remove stone & brick retaining wall behind house.
- Install concrete retaining wall in place of existing stone & brick wall.
- Replace concrete stair and walk with new concrete stairs and walkways. Install steel pipe handrail from Chase Street.
- Construct new concrete patio in place of demolished shed.
- Install concrete drainage swales at rear (north elevation) of house.
- Install decorative wrought iron fence along Chase Street and west side of property.
- Install wire metal fencing at east side of property

Residence – exterior rehabilitation

- Restore hip roof over historic west addition.
- Install a new roof form over bath at rear (north) side of house to improve drainage.
- Remove existing roof material, install asphalt shingles.
- Install non-painted half round metal gutters with round metal downspouts.
- Repair east chimney; rebuild northwest exterior chimney with salvaged brick.
- Replace existing siding and trim on residence with wood lap siding with 4" reveal.
- Windows: replace wood frame windows with new windows per window schedule.
- Doors: Replace historic wood doors 1 and 2 with new wood doors and wood storm doors. The opening for Door 1 will be widened to 3'-0" for egress. Add new metal door at rear of house for access to mechanical room. All doors to be painted.
- Stone foundation will be replaced with a concrete foundation with stone veneer on the east and southeast; brick foundation on south will be replaced with concrete foundation with stone veneer.
- Install new exterior lighting.
- Repaint house.

In accordance with the Black Hawk Municipal Code, all final plans for a Rehabilitation Grant must be reviewed by the Historic Preservation Commission as well as City Council.

APPLICABLE CITY OF BLACK HAWK REGULATIONS

Excerpt from:

City of Black Hawk

Historic Restoration and Community Preservation Fund Guide to Programs

Section 1: Program Overview, (e) General Program Information, (3) The City Council shall have the authority in its sole discretion to deny any application submitted for a grant or easement project if, in their opinion, the Property Owner has neglected to adequately maintain their property allowing it to become in a state of disrepair.

Excerpt from:

City of Black Hawk Zoning Code
Chapter 16
Section 16-368, City Council historic review process

16-368: Anyone seeking to renovate the exterior of, add to or construct a new building shall be subject to the following procedures. Any such renovation construction or demolition shall be subject to the City's design standards.

f. Criteria for determining appropriateness of proposed erection, construction, reconstruction or alteration. In determining the appropriateness of a proposed site plan or building permit for the erection, construction or alteration of a building, the HPC and the City Council shall consider the following:

1. ***All plans, drawings and photographs as may be submitted by the applicant;***
   The scope of work described in this report and illustrated by photographs, plans and manufacturers' sheets that show the existing conditions and adequately describes the proposed alterations.

2. ***Information presented at a public hearing held concerning the proposed work;***
   Findings and recommendation from Historic Preservation Commission will be presented to the Board of Aldermen at the Public Hearing scheduled for December 10, 2014.

3. ***The purpose of this Chapter;***
   The information received adequately describes the proposed work in order to determine the appropriateness of the proposed rehabilitation.

4. ***Compliance with the Black Hawk Municipal Code and the payment of all fees required by the Black Hawk Municipal Code;***
   The project complies with all regulations of the Municipal Code.

5. ***The historical and architectural style, the general design, arrangement, texture, materials, and color of the development, building or structure in question or its appurtenance fixtures; the relationship of such features to similar features of the other buildings within the City and the position of the building, structure, park or open space in relation to public right-of-way and to other buildings and structures in the City;***
   The historic residence is an example of a "National Folk" form - the *gable-front-and-wing* (as defined by Virginia and Lee McAlester). It is comprised of a gable-front section, with an additional side-gabled wing added at right angles [see Figure 4]. A shed roof porch was typically placed within the L made by the two wings; in this instance; however, there are no historic photographs which document the existence of a porch. The building was likely constructed in stages, with the hip roof addition on the west side built after the front and side-gable sections. There is also a small rear addition with a gable roof. The roof ridge of the gable-front portion is slightly higher than the side gable wing, and the historic hip roof over the west addition is even lower [see Figure 5 for roof view]. This stepped shape is common in buildings that were added to over time. The building is primarily clad in wood lap siding, although the north elevation has metal sheet

panels. A recent wood evaluation reported that the majority of the siding and fascia does not date from the estimated construction date, but the wood windows may be original.

Figure 4. 401 Chase Street in 2014.

Figure 5. 401 Chase Street in 2014, looking south.

6. ***The effects of the proposed work upon the protection, enhancement, perpetuation and use of the City which cause it to possess a special character or special historical or aesthetic interest or value; and***
   The property was re-evaluated in 2010-2011 and was determined "contributing" to the National Historic Landmark historic district. **The HPC should review the proposed alterations and evaluate their effect on the historic property's potential eligibility.**

7. ***The design standards for the City.***
   Sections *2. Site Design*; *3. Rehabilitation of Historic Structures*; *4. Paint, Paint Colors and Lead Paint Issues; 5. Additions to Historic Structures;* and *7.4 Exterior Lighting* of the City of Black Hawk Residential Design Guidelines adopted in 2011 apply to this application. Listed below are the applicable sections and evaluation of the proposed alterations for 401 Chase Street for compliance.

Excerpts from:

City of Black Hawk Residential Design Guidelines
2. Site Design

2.1 ***Site design***

2.2.1. Respect historic settlement patterns and traditional patterns of building alignment and orientation

2.2 ***Topography and Grade***

2.2.1 Existing topography should be maintained whenever possible.
- **b. Where natural rocks remains in stable condition, leave it undisturbed.**

2.2.2. Respect natural site features.
- **a. Buildings should be located and designed to accommodate any features or limitations.**

2.2.3. Minimize cut and fill that would alter the natural topography of the site.
- **b. use earth berms, rock forms, or stone retaining walls to minimize the visual impacts of cuts.**

2.2.4. Use terraces for sloped building sites.
- **b. The use of rock retaining walls, similar to those used historically, is encouraged.**

2.2.5. All land that is visible from a public way shall be reclaimed in a manner described below.
- **a. Preferred reclamation methods are:**
  - **Plantings, as provided in the landscape standards**
  - **Natural rock, in a stable condition**
  - **Concrete retaining walls faced with native stone or appropriate wood cribbing.**

2.2.6. Retain existing natural drainage patterns where possible; design new drainage systems to complement and follow the existing terrain.
- **a. Design drainage systems and storm water detention basins as amenities.**

2.3 ***Fencing***

2.3.1. Painted wood, wrought iron, picket, woven wire, rail or stone fences are appropriate in residential-type areas.

a. Wrought iron fencing should be either black or rust colored.

2.3.4. Fences shall be similar to those seen historically.

2.4 ***Retaining walls***

2.4.1. Historic stone walls and other site features should be repaired or restored, replacing only those portions that are deteriorated beyond repair.

2.4.2. Native stone retaining walls are encouraged.

a. Stone walls should be similar in appearance to those seen historically, including finishing, joining, and height.

2.4.3. Retaining walls should be of dry stone or stone masonry and be compatible with other features onsite.

2.4.5. Use walls to prevent erosion and drainage issues.

Summary of proposed site design & evaluation of proposal's compliance with Section 2:
The topography will be altered on the west side of the building, where a new concrete patio will be installed. Although not necessarily designed as an amenity, the new drainage swale system at the rear matches the concrete patio and sidewalks, and will not be visible from the street [see Attachment B, sheet C200].

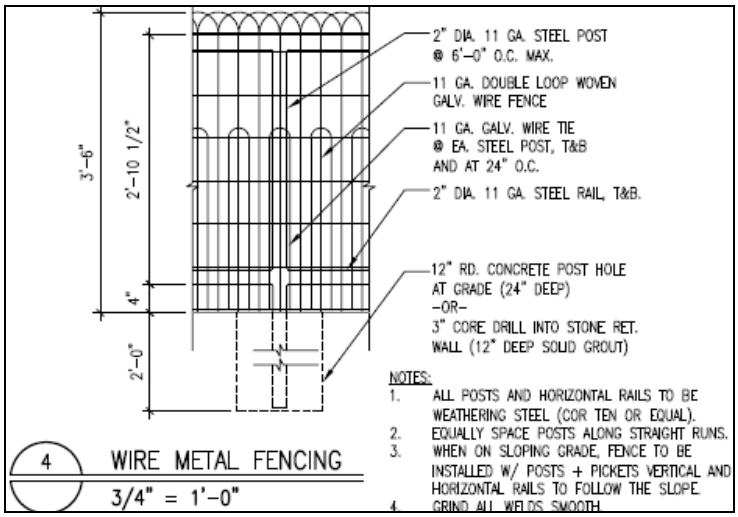

Figure 6. Details of woven wire fencing with steel posts and rails for east property line.

A new woven wire fence with steel rails and posts will be installed on the east property line [see Figure 6]. Black iron fencing with gate at the bottom of the stairs will be installed on the south property line and west side around the patio. This material meets the design guidelines – black wrought iron – but the design is not one found historically [see Figure 7]. However, the simple design is an acceptable alternative.

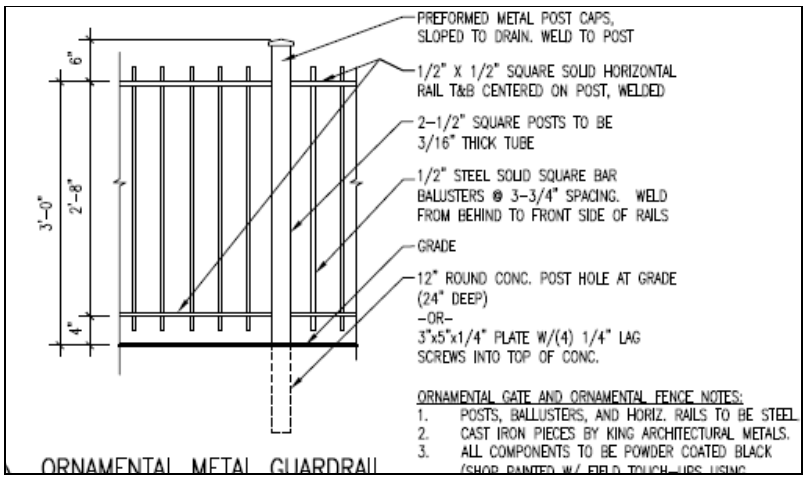

Figure 7. Detail of wrought iron fence.

A new concrete retaining wall at the rear (northwest) side of the house will prevent erosion [see Figure 8 and sheet A000, Attachment B].

Figure 8. Looking east at north elevation of house, where ground debris and topography have led to poor drainage and damage to the structure.

At the northeast corner of the house, the portion of the existing stone retaining wall will be replaced with concrete behind the house, although the sections of the wall that are visible from the street will be rebuilt with stone [see Figure 9 and sheet A000, Attachment B].

Figure 9. Looking northwest at rear of house and section of stone wall proposed for reconstruction.

The existing historic stone retaining walls along the front (south) property line will be retained wherever possible, and rebuilt where required for construction of the new site stairs and for utility replacement [see Figure 10].

Figure 10. Stone retaining walls along High Street (south property boundary).

The existing stone walls on the west side of the house will be rebuilt, but not at the same height or location. A new stone retaining wall will be built to connect the rear patio retaining wall to the concrete retaining wall behind the house [see Figure 11]. The historic retaining wall on the west side of the patio will be demolished due to grading changes required for patio construction; this does not meet the design guidelines.

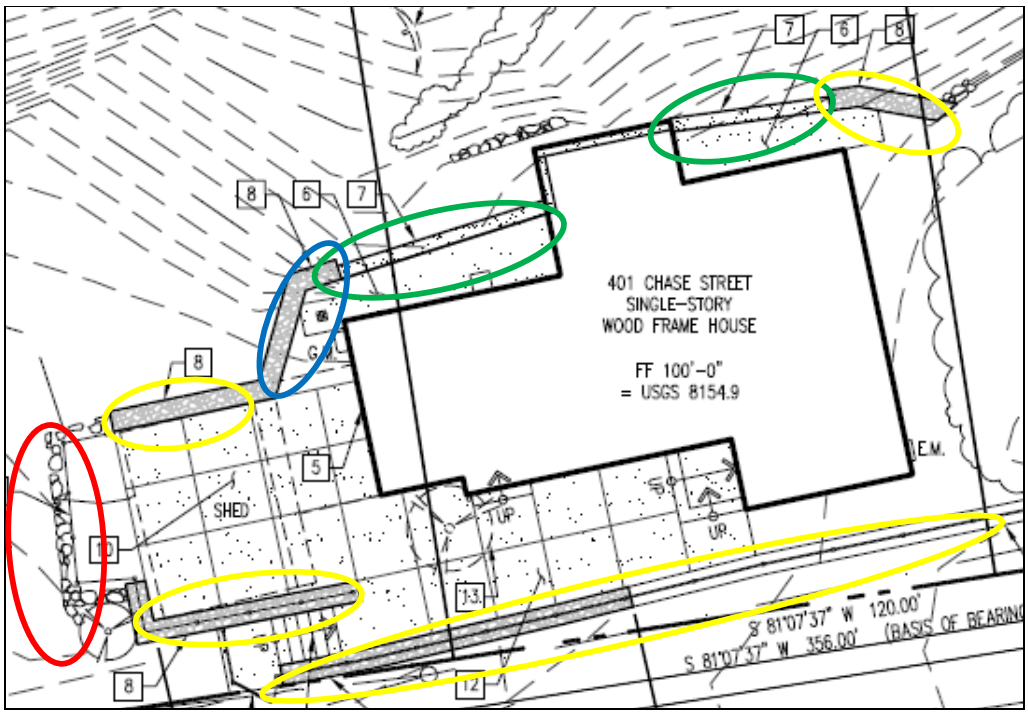

Figure 11. Green ovals indicate new concrete retaining walls; **yellow** ovals indicate rebuilt stone retaining walls; and **blue** ovals indicate new stone retaining walls. The historic retaining wall in the **red** oval will be demolished.

The non-historic shed on the west side of the house will be demolished. At the north, west, and south sides of the house, the ground will be paved in concrete (no colorant), extending to the retaining wall on the front and into a patio on the west. The existing concrete site stairs will be replaced with new concrete, and will be moved slightly west from the existing location. There will be a steel pipe handrail. The design guidelines do not address patios, but the west patio is not highly visible from the public right-of-way; the front patio, however, will be more visible [see Figure 11]. This does not meet the design guidelines for the preferred land reclamation methods. The tailings and mining waste at the rear (north) of the property will be covered late in a separate proposal.

Excerpts from:

3. Rehabilitation of Historic Structures

3.1 ***Appropriateness of Use***

3.1.1 Seek uses that are compatible with the historic character of the building

3.2 ***Roofs***

3.2.A.1. Preserve the original roof form. This includes the roof's shape and decorative features.

3.2.B.2. When repair or replacement is necessary, use materials similar to the original.

3.2.C.3. Half round galvanized gutters are historically appropriate and preferred on residential homes.

3.3. ***Exterior Materials: Wood Siding and Masonry***

3.3.A.1. Original historic finish materials should be preserved, rehabilitated and/or repaired.

- **a. If portions of wood siding must be replaced, be sure to match the lap dimensions of the original.**

3.3.B.4. Repair or replacement of mortar should be done by a masonry professional experienced in historic masonry repair.

3.3.C.1. Protect and maintain significant stylistic elements.

- **a. Avoid removing or altering any historic material or significant features.**
- **b. Repair historic building features that are deteriorated where feasible.**
- **c. When disassembly of an historic element is necessary for its restoration, use methods that minimize damage to the original materials.**
- **d. Use the gentlest possible procedures for cleaning, refinishing, and repairing historic materials.**

3.3.C.2. Replace missing original features in kind where feasible

- **a. Replacement of missing architectural elements should be based on accurate information about original features.**
- **b. Where reconstruction of an element is impossible, develop a compatible new design that is a simplified interpretation of the original.**

3.4 ***Doors***

3.4.1. Retaining and preserving original doors and door openings is preferred rather than replacement.

3.4.2. Retain and preserve the functional, proportional and decorative features of a primary entrance.

- **a. Such features can include frames, sills, heads, jambs and moldings.**
- **b. Door materials should be wood or appear similar to wood.**

3.4.5. Avoid changing the position of historic doors.

- **b. Also avoid adding additional doors to facades that are visible from the street.**

3.4.6. When replacing doors, use designs similar to those found historically on comparable buildings in Black Hawk.

c. Contemporary ornate doors are discouraged on "contributing" buildings, unless photographic evidence can substantiate their historic use.

3.4.7. If heat loss or energy conservation is a concern, consider installation of a storm door instead of replacing a historic entry door.

a. wood storm door is preferred. A colored metal storm door, featuring a simple design, may be appropriate.

3.5.C.6. Genuine, transparent glass shall be used in all windows and doors.

3.5 ***Windows***

3.5.A.1. Identify, retain and preserve the functional and decorative features of windows found historically.

3.5.C.1. If replacement is necessary, replace in-kind. However, window materials that appear similar to wood may be considered on a case-by-case basis.

3.5.C.3. Avoid changing the position of historic windows.

3.5.C.4. Maintain the historic subdivisions of windows.

b. Where multiple-pane windows are appropriate, true divided lights are preferred. This especially true for windows that are at ground level and close to sidewalks and walkways where the window details may be clearly seen by the public.

c. Do not use "internal" muntins that are stuck between two layers of glass. Snap-in muntins may be used on larger areas of glass in new construction, provided they are installed on both sides of the glass.

3.5.C.6. Genuine, transparent glass shall be used in all windows and doors.

3.6 ***Porches***

3.6.1. Original porches should be preserved.

3.6.3. Reconstructing a missing historic front porch is encouraged.

a. The replacement porch should be based on documented evidence of the original porch.

b. In the absence of documentation of the original porch, design a simplified version of porches found on houses of similar age and style.

3.7 ***Decks***

3.7.1. Minimize the visual impact of any decks.

3.7.2. Decks should be subordinate to the house in terms of scale and detailing.

3.7.4. Railings should be similar to historic railing heights.

3.7.5. Decks should be painted or stained to match the exterior color of the house, but will be reviewed on a case by case basis.

3.7.6. Materials with a synthetic look should be avoided, but will be reviewed on a case by case basis.

Summary of proposed exterior rehabilitation & evaluation of compliance with Section 3:

Proposed use: The historic use of this building was residential, and it will remain residential after rehabilitation. This meets the design guidelines and the Secretary of the Interior's Standards for rehabilitation.

Roofs: The roof shapes over the gable-front-and-wing will be unchanged. The roof over the later west addition will be restored to its original hip roof form as seen in the county assessor's photographs. The new roofing material will be asphalt shingles, color "Teak" manufactured by Owens Corning [see figure 13]. Although the original wood shake shingles are visible beneath the present roofing, the proposed asphalt shingles are an acceptable substitute. The rear addition will have a new roof shape to provide better drainage. This addition is not visible from the public right-of-way and will not have a negative impact.

Exterior Materials: The wood siding, trim and windows were evaluated by Anthony & Associates [see Attachment D]. That report found the horizontal wood siding to generally be in good to fair condition, with the following exception: siding on the east exhibits warp and a few are broken. The report summarized that the siding was likely not original to the date of construction. Both the design guidelines and the Secretary of the Interior's Standards recommend retaining historic wood siding and features; repair the siding whenever possible; and if not possible, to replace in-kind. The rehabilitation plans propose to replace all siding and trim. Since the wood siding is not original, the standards for preservation are not as applicable. However, since there are no historic photographs dating from the period of significance, it is difficult to accurately evaluate this element of the proposal. The proposed replacement will match the existing siding in size and materials, but it is unknown if these are identical to the original construction.

The stone foundation will be replaced with a concrete foundation, which will have stone veneer on the south and southeast. The stone veneer will be set in-line with siding, but may still have the appearance of veneer [see Figure 12 and sheet S400, Attachment B].

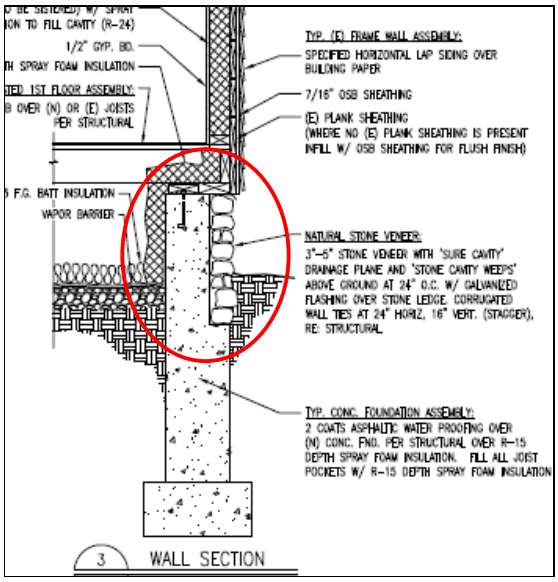

Figure 12. Section plan of concrete foundation with stone veneer.

Doors: There are two historic wood doors on the front elevation; both doors are proposed to be replaced with new wood doors. One of these door openings (location 1) is proposed to be enlarged. This does not meet the Secretary of the Interior Standards or the design guidelines. Although the wood replacement doors are similar in style to those found historically, they do not match the existing doors; this does not meet the guidelines or standards [see Figure 13]. A new door opening will be added to the rear for access to the mechanical room; this will not be visible from the public right-of-way [see Figure 14].

Figure 13. Left door will be installed at locations 1, the middle door will be installed at location 2, and the right door (metal) will be installed at location 9. Doors will be painted .

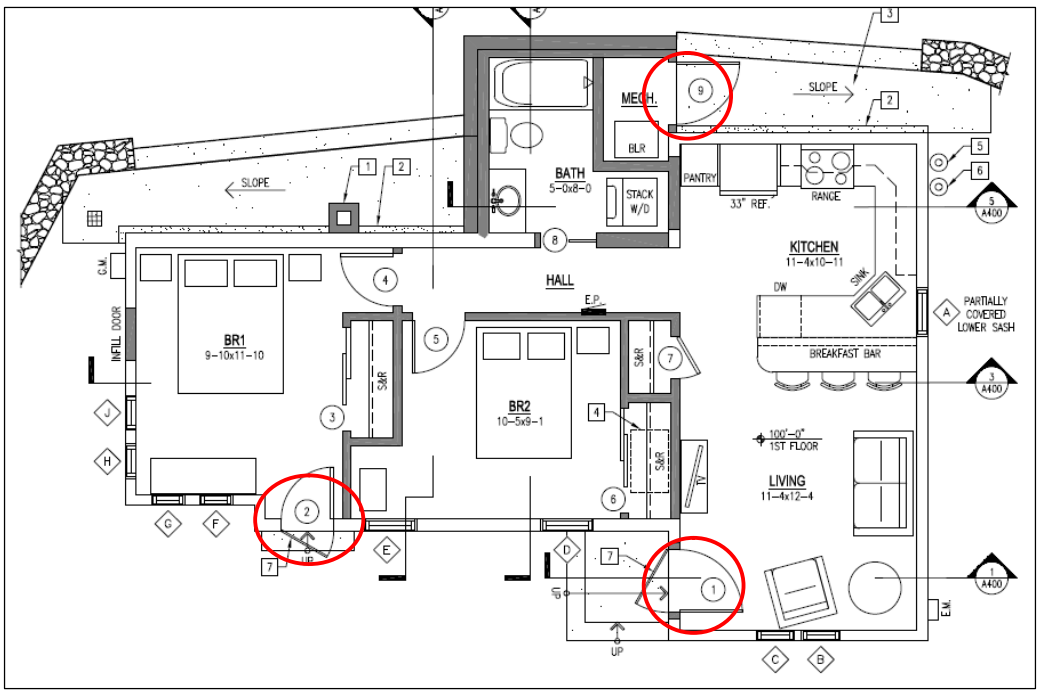

Figure 14. Door locations 1, 2 & 9.

The exterior door handles will be Kwikset's "Avalon" in iron black. There will be painted, wood screen doors installed at locations 1 and 2; wood screen doors are recommended by the design guidelines [see Figure 15].

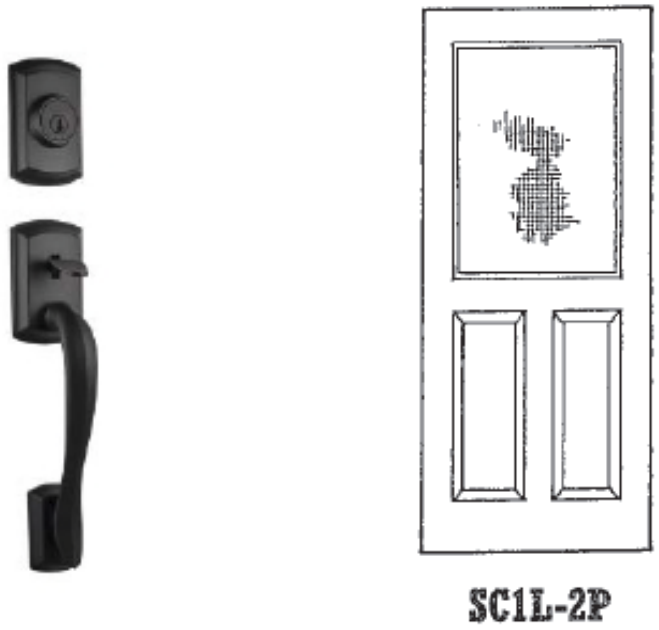

Figure 15. Door hardware (left) and wood screen door (right).

Windows: The wood elements of the windows were estimated to be historic and possibly dating from the original construction. Most of the glazing has been replaced, with the exception of the east elevation of the window, which is historic [see Attachment D]. All historic windows are proposed for replacement with double-hung, aluminum clad wood windows with clear glazing [see Figure 16 for window type and aluminum cladding color] except for the windows on the west addition. Here, the existing fixed sash windows will be replaced with an awning-type window with a single glazing. The design guidelines recommend a prioritized approach to historic windows. First, preserve and repair historic windows. If too deteriorated, then replace in-kind, matching size, materials, and style. Replacement materials that are similar to wood may be considered on a case-by-case basis.

Figure 15. Proposed replacement windows, exterior view.

Excerpts from:

4. Paint, Paint Colors and Lead Paint Issues

4.1 ***Color***

- **4.1.1. Use historic color schemes.**
- **4.1.2. Develop a color scheme for the entire building that coordinates all the façade elements.**
- **4.1.3. Use muted colors for the base and brighter colors for accents.**
- **4.1.4. Leave natural masonry finishes unpainted when feasible.**

Evaluation of proposed paint scheme and proposal's compliance with Section 4:
The proposed colors and paint scheme for the building meet the design guidelines by utilizing a coordinating scheme with muted colors [see Figure 16].

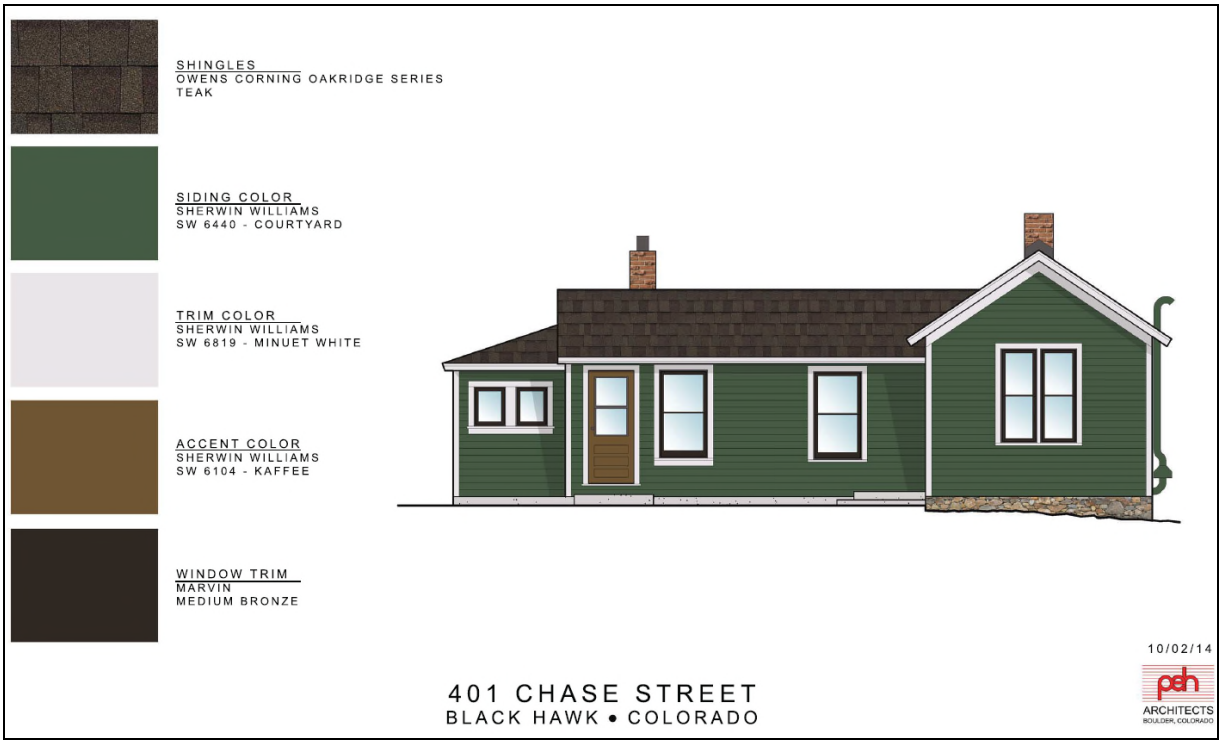

Figure 16. *Note:* Colors may appear different on monitors.
Samples are available for review at the CP&D offices and at the public hearing.

Excerpt from:

5. Additions to Historic Structures

5.1. Preserve older additions that have achieved historic significance in their own right.

- **a. Examples may be a porch or a kitchen wing that was added to the original building early in its history.**
- **b. Most alterations 50 years and older have achieved historical significance.**

Summary of proposed exterior rehabilitation & evaluation of compliance with Section 5:
The west addition is visible in the earliest county assessor's photos (ca. 1950s – 1960s) and is therefore historic. It is being rehabilitated, and the original roof form is being restored, which meets the design guidelines. The rear addition is visible in assessor's drawings of floor plans (ca. 1950s – 1960s) and is also therefore historic. However, the roof form is changing to better accommodate drainage. This is not visible from the public right-of-way.

Excerpts from:

7.4. Exterior Lighting

7.4.1. Lighting fixtures should contribute to the overall historic character of a house or neighborhood.
7.4.2. Lighting should be functional not just historically decorative.
7.4.3. All lighting should focus downward.

Summary of proposed exterior rehabilitation & evaluation of compliance with Section 7:
The locations of the exterior lights are shown in Attachment B. The fixtures will be dark metal lantern-type [see Figure 17]. Dark metal, lantern-type fixtures that have no upward light would meet the design guidelines.

Figure 17. Exterior light fixture.

APPLICABLE GUIDE TO PROGRAM STANDARDS

All grants, whether Full Site Building, Site Work, Emergency or Radon Mitigation, must adhere to the eligibility requirements in the City of Black Hawk Historic Restoration and Community Preservation Fund Guide to Programs, the Residential Design Guidelines, and the Secretary of the Interior's Standards for treatment of historic properties. The project was evaluated using these standards and staff found the elements of the proposal are in accordance and meet the requirements.

CONSULTANT COMMENTS

The exterior rehabilitation and site work described on page 3 of this report require a Certificate of Appropriateness. The consultant's evaluation of the proposal finds that some elements of the proposed work are not in accordance with the City of Black Hawk Residential Design Guidelines and the U.S. Secretary of the Interior's Standards for Rehabilitation. These include:

- Enlargement of one of the primary door openings (a character-defining feature).
- Replacement of all historic doors instead of rehabilitating the doors.
- Replacement of all historic windows with metal-clad windows. .
- Replacement of all siding although investigation shows some of the siding to be in good condition.
- Changing the height and location of some of the stone retaining walls.
- Installing a large concrete patio area on the front and side of house.

HISTORIC PRESERVATION COMMISSION RECOMMENDATION

The Historic Preservation Commission (HPC) evaluated the application, the comments in the report, and testimony by staff, consultants, and the applicant. The list of non-conforming elements in the previous section served as a starting guide for the Commission's discussion. Following is the result of that discussion:

- Enlargement of one of the primary door openings (a character-defining feature).
  Door No. 1 is the selected location for enlargement and found acceptable by the Commission. Location is not readily visible from the public right-of-way.
- Replacement of all historic doors instead of rehabilitating the doors.
  Condition of the current doors is poor. Replacement doors were found to be acceptable and commonly seen throughout the National Historic Landmark District.
- Replacement of all historic windows with metal-clad windows.
  The Commission reviewed the window survey which noted the wood elements of the windows were estimated to be historic and possibly dating from the original construction. However, most of the glazing has been replaced, with the exception of the east elevation of the window, which is historic. The Commission agreed the expenditure of public funds would be better spent on the replace windows rather than repair of the current windows.
- Replacement of all siding although investigation shows some of the siding to be in good condition.
  Since the wood survey report summarized that the siding was likely not original to the date of construction, the Commission agreed the siding could be replaced.
- Changing the height and location of some of the stone retaining walls.
  The existing stone walls on the west side of the house will be rebuilt, but not at the same height or location. A new stone retaining wall will be built to connect the rear patio retaining wall to the concrete retaining wall behind the house. The historic retaining wall on the west side of the patio will be demolished due to grading changes required for patio construction. Although this does not meet the design guides, the Commission determined that due to the existing topography and the desire to protect the structure from the existing hillside, the change in height and location would be minimal and unnoticeable from the right-of-way.
- Installing a large concrete patio area on the front and side of house.
  The Residential design guidelines do not address patios. Although the west patio is not highly visible from the public right-of-way; the front patio will be more visible. Additionally, concrete is not a preferred land reclamation method as outlined in the design guidelines. Keeping this in mind the Commission agreed from a maintenance perspective concrete in this area was a good choice. The east side of the house still maintains a grassy area with mature trees.

The Commission next discussed if there is sufficient evidence that the Certificate of Appropriateness application meets the intent of the criteria outlined in the City of Black Hawk *Historic Restoration and Community Preservation Fund Guide to Programs*, Section 16-368 of the *Black Hawk Municipal Code*, and Sections 2, 3, 4, 5, and 7.4 of the *City of Black Hawk Residential Design Guidelines*.

At the conclusion of its discussion, the Historic Preservation Commission recommended to the Board of Aldermen ***APPROVAL*** of the Certificate of Appropriateness for full exterior rehabilitation and site work at 401 Chase Street based on the criteria set forth in the staff report dated December 2, 2014. The Certificate of Appropriateness application for 401 Chase Street meets the intent of the criteria outlined in the City of Black Hawk Historic Restoration and Community Preservation Fund Guide to Programs, Section 16-368 of the Black Hawk Municipal Code, and Sections 2, 3, 4, 5, and 7.4 of the City of Black Hawk Residential Design Guidelines.

The Historic Preservation Commission also provided direction that if any minor product, materials, or color changes that meet the design guidelines can be approved by staff administratively.

STAFF RECOMMENDATION

Staff recommends to the Board of Aldermen **APPROVAL** of the Certificate of Appropriateness for full exterior rehabilitation and site work at 401 Chase Street based on the criteria set forth in the staff report dated December 2, 2014. The Certificate of Appropriateness application for 401 Chase Street meets the intent of the criteria outlined in the City of Black Hawk Historic Restoration and Community Preservation Fund Guide to Programs, Section 16-368 of the Black Hawk Municipal Code, and Sections 2, 3, 4, 5, and 7.4 of the City of Black Hawk Residential Design Guidelines.

ATTACHMENTS

A: Cultural Resource Evaluation Form
B: Selected plans, PEH Architects
C: Project Manual, PEH Architects
D: "Window, Siding, and Trim Investigation of 401 Chase Street," Anthony & Associates

NOTICE OF PUBLIC HEARING

Notice is hereby given in accordance with the City of Black Hawk Zoning Ordinance that the City of Black Hawk Board of Aldermen shall hold a public hearing concerning a Certificate of Appropriateness for full exterior rehabilitation and site improvements at 401 Chase Street. This property is described in Exhibit A below and is generally located along Chase Street.

The public hearing is to be held before the City of Black Hawk Board of Aldermen on Wednesday, December 10, 2014 at 3:00 p.m. or as soon as possible thereafter. The public hearing shall be held in the City of Black Hawk Council Chambers located at 211 Church Street, Black Hawk, Colorado, 80422, or at such other time or place in the event these hearings are adjourned.

ALL INTERESTED PARTIES
MAY ATTEND

Melissa A. Greiner
City Clerk

Exhibit A

401 Chase Street –

S: 12 T: 3S R: 73W Subd: BLACK HAWK Block: 017 Lot: 006 THRU:- Lot: 008 & IMPS

ATTACHMENT A

Cultural Resource Evaluation Form

BLACK HAWK CULTURAL RESOURCE SURVEY

Cultural Resource Re-evaluation Form

1. Current Address: **401 Chase**

2. Resource Number: **5GL.7.446**

3. NHL Resource Number: **B17-1**

4. Resource Name:

5. Purpose of this current site visit (check as many as apply)

____ Site is within a current project area
_X_ Resurvey
_X_ Update of previous site form(s)
____ Surface collection
____ Testing to determine eligibility
____ Excavation
____ Other

6. Previous Recordings:

_X_ 1986 National Park Service Survey	_X_ Photograph	
_X_ 1991 National Historic Landmark Nomination	No Photographs	_X_ Contributing
_X_ 1998 Re-survey	_X_ Photograph	
_X_ 2004 Photo survey	_X_ Photograph	
____ Other:	___ Photograph	

7. Exterior alterations since 1986: **No permits recorded, but a shed-like addition was built on the west side between 1986 and 1998.**

8. Additional historical background: **Sanborn maps do not cover this far west on Chase Street. Deed research may reveal a more accurate construction date.**

_Ca. 1890_ Construction date _X_ Estimate from 1986 NPS Survey ___ New estimate

Sources of information:

Sanborn Maps

___ 1886

___ 1890

___ 1895

___ 1900

Current Address: **401 Chase**

Resource Number: **5GL.7.446**

NHL Resource Number: **B17-1**

9. Changes to Location or Size Information: **No permits recorded, but a shed-like addition built on the west side between 1986 and 1998.**

10. Revised National Historic Landmark District- Contributing Building Eligibility Assessment:

    Contributing **_X__** Non contributing ____ Need data_

11. National Register - Individual Eligibility Assessment:

    Eligible ____ Not eligible **_X__** Need data____

12. Is there National Register district potential? Yes **_X__** No ____

    Discuss: **This would be a contributing building to a potential district**

13. Local Designation - Individual Eligibility Assessment:

    Eligible **_X__** Not eligible ____ Need data____

14. Is there Local district potential? Yes **_X_** No ____

    Discuss: **This would be a contributing building to a potential district**

15. Photograph Types and Numbers: **Digital, <.jpg> format. 401 Chase-1.JPG, 401 Chase-2.JPG, 401 Chase-3.JPG**

16. Report Title: **Black Hawk Historic Resource Resurvey: 2009-2010**

17. Recorder(s): **Deon Wolfenbarger**

18. Date(s): **May 17, 2010**

19. Recorder Affiliation: **Three Gables Preservation**

20. Attachments
    (check as many as apply)
    _X_ Photographs
    ___Site sketch map
    ___U.S.G.S. map photocopy
    _X_ Other _____
    ___Other _____

21. Official determination
    (OAHP USE ONLY)
    ___ Determined Eligible
    ___ Determined Not Eligible
    ___ Need Data
    ___ Nominated
    ___ Listed
    ___ Contributing to N.R. District
    ___ Not Contributing to N.R. Dist

Current Address: **401 Chase**
Resource Number: **5GL.7.446**
NHL Resource Number: **B17-1**

Current Photographs
Date: **05/13/2009 & 1/21/2010**

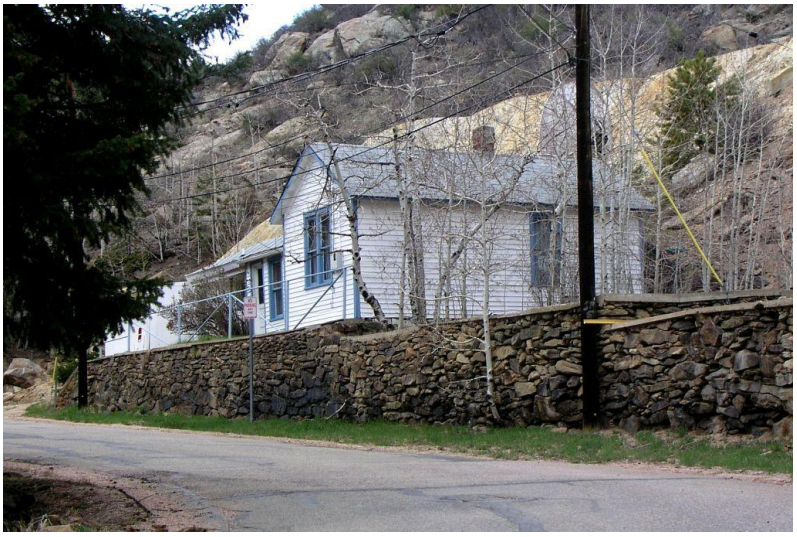

Current Address: **401 Chase**
Resource Number: **5GL.7.446**
NHL Resource Number: **B17-1**

2004 Photograph

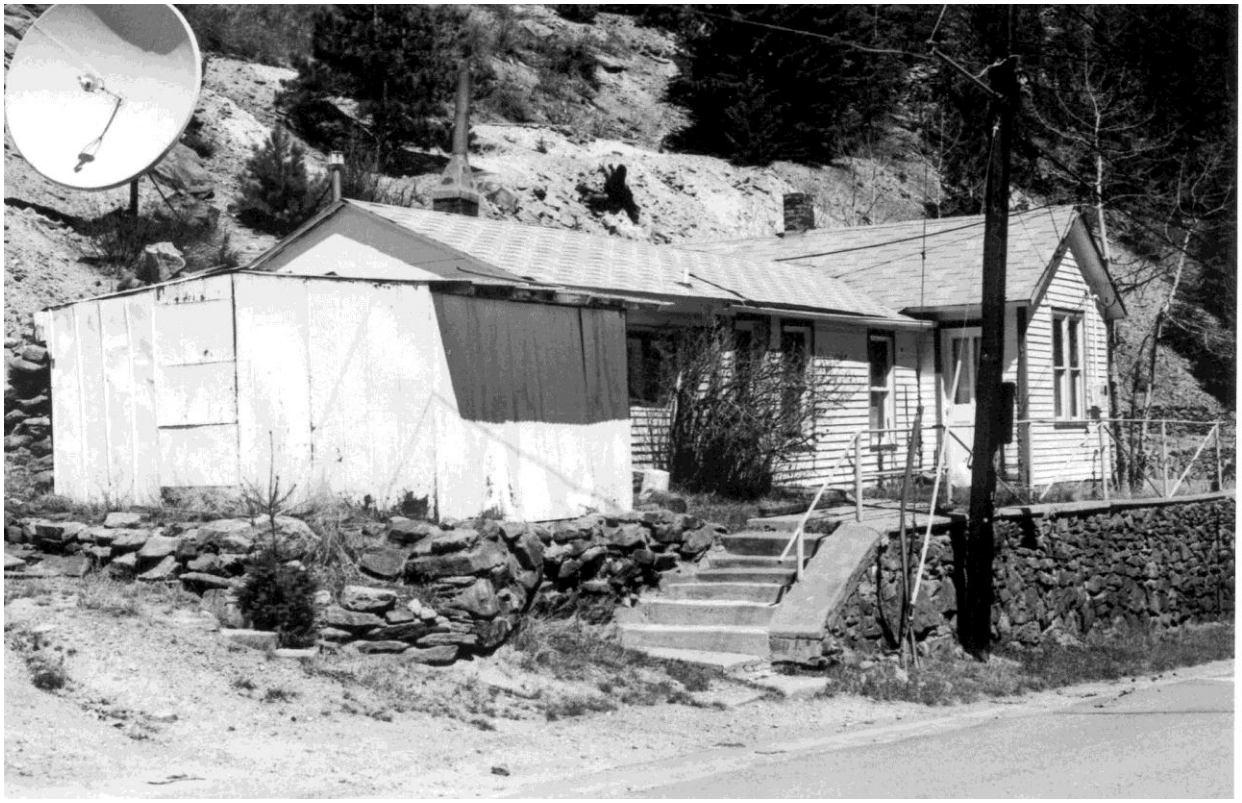

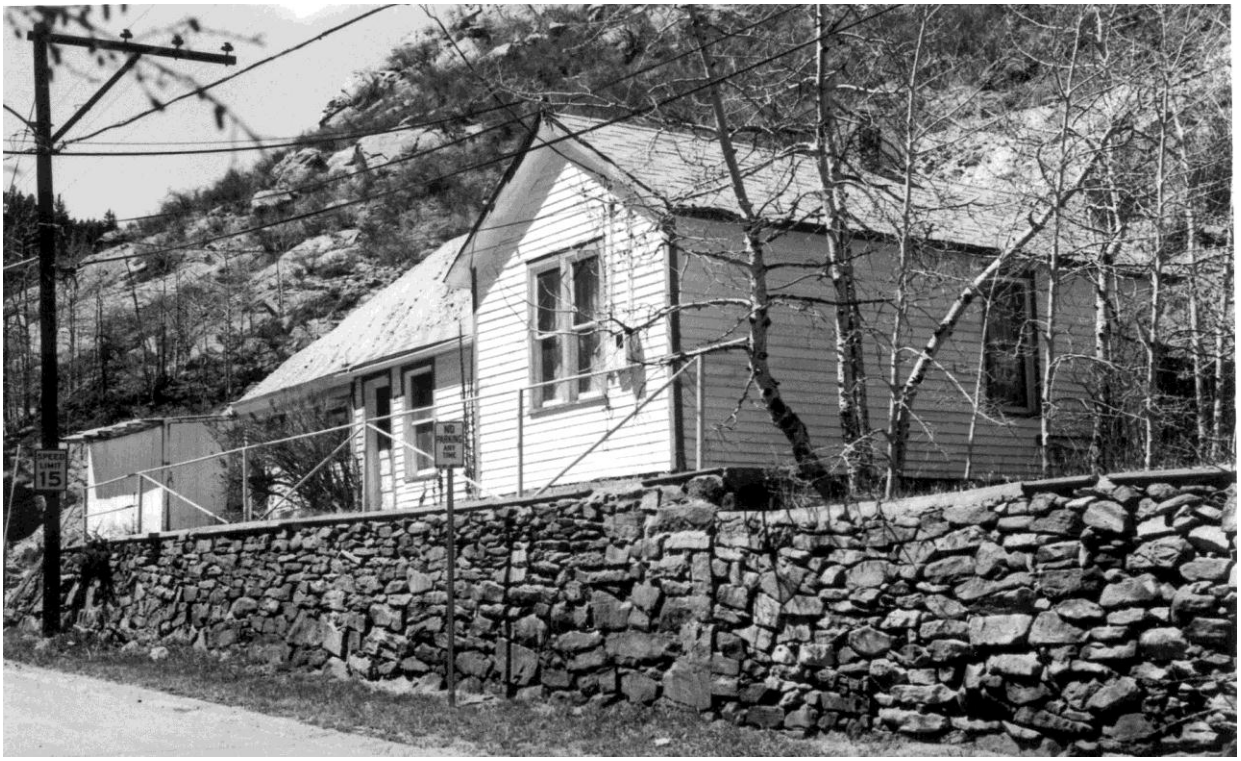

1998 Resurvey Photograph

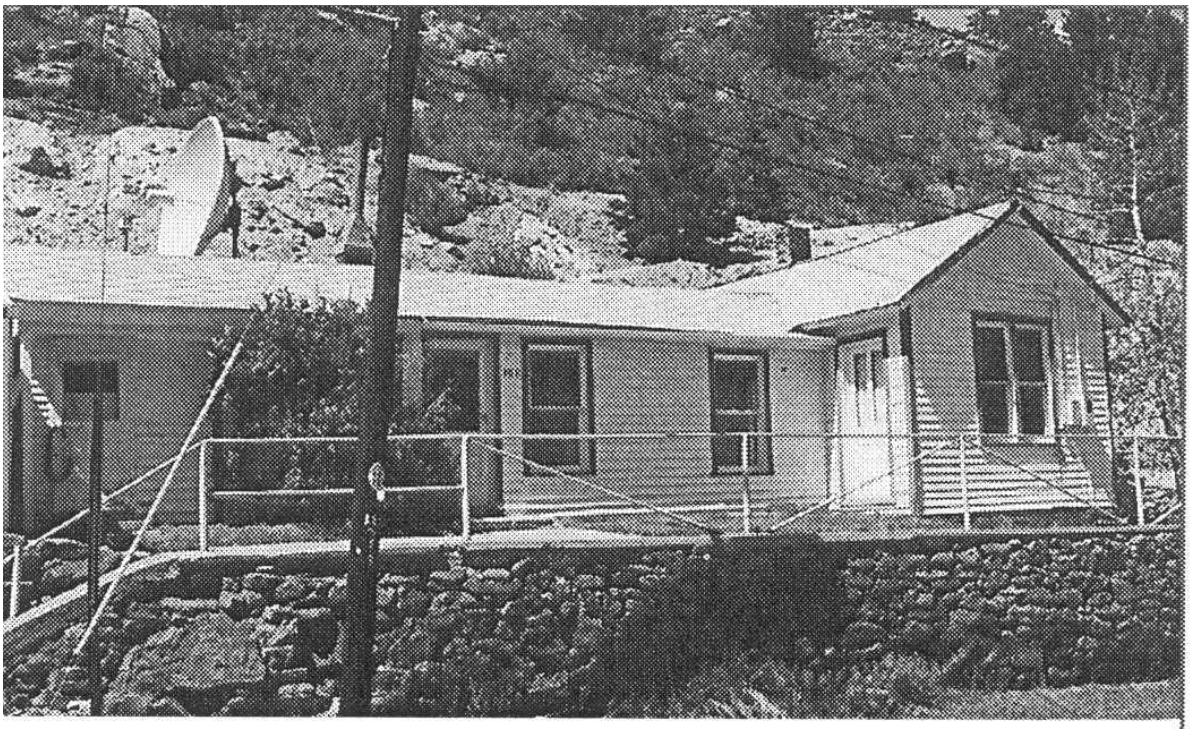

1986 Survey Photograph

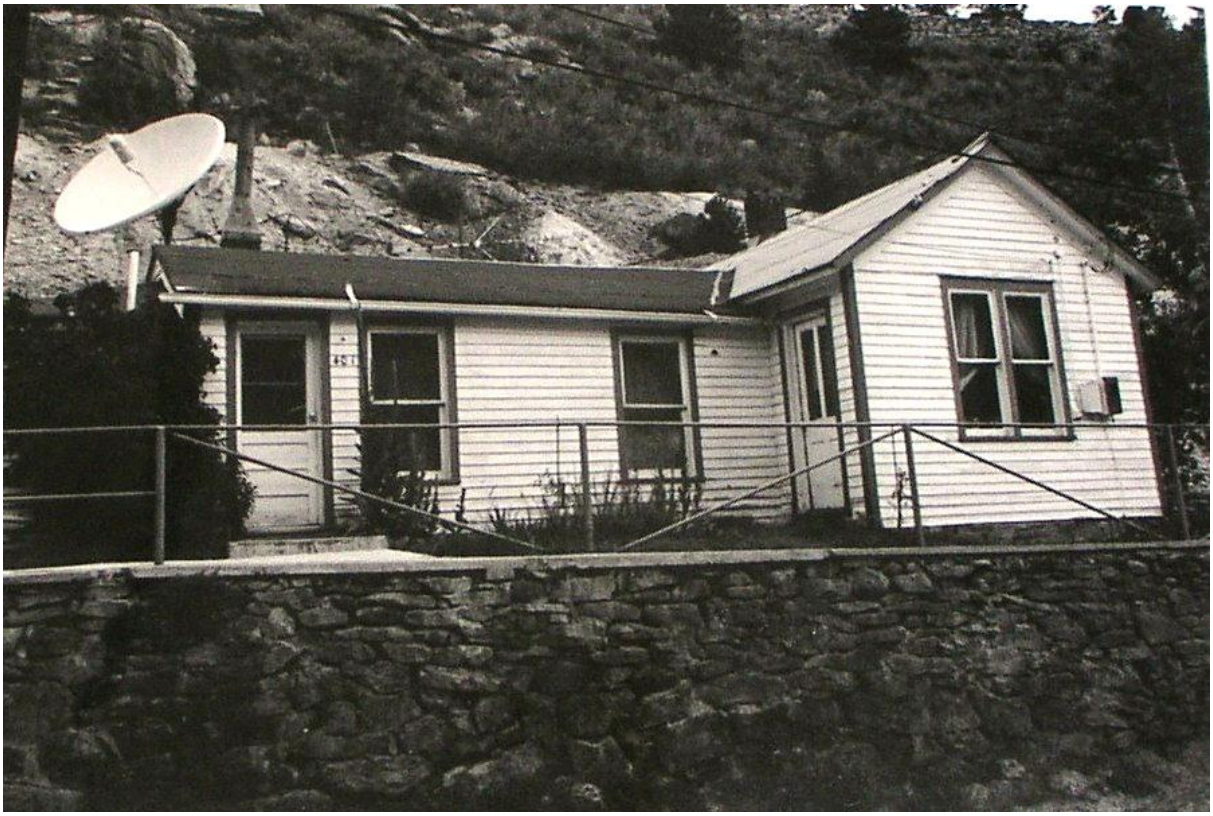

Current Address: **401 Chase**
Resource Number: **5GL.7.446**
NHL Resource Number: **B17-1**

Continuation Sheets

Gilpin Assessor's Photographs

ATTACHMENT B

Selected plans, PEH Architects

401 CHASE STREET REHABILITATION

Black Hawk, Colorado 80422

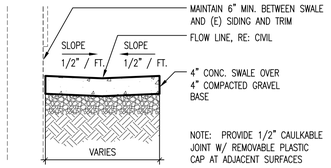

5 CONC. SWALE DETAIL
3/4" = 1'-0"

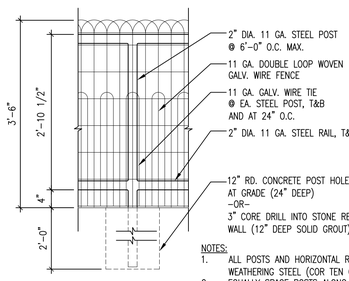

NOTES:
1. ALL POSTS AND HORIZONTAL RAILS TO BE WEATHERING STEEL (COR TEN OR EQUAL).
2. EQUALLY SPACE POSTS ALONG STRAIGHT RUNS.
3. WHEN ON SLOPING GRADE, FENCE TO BE INSTALLED W/ POSTS + PICKETS VERTICAL AND HORIZONTAL RAILS TO FOLLOW THE SLOPE.
4. GRIND ALL WELDS SMOOTH.

4 WIRE METAL FENCING
3/4" = 1'-0"

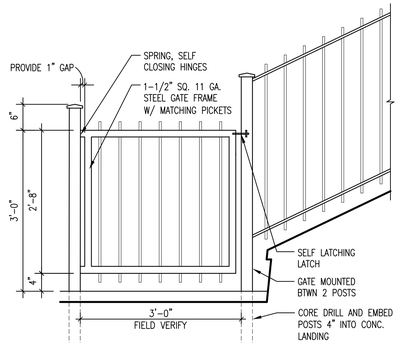

3 ORNAMENTAL METAL GATE
3/4" = 1'-0"

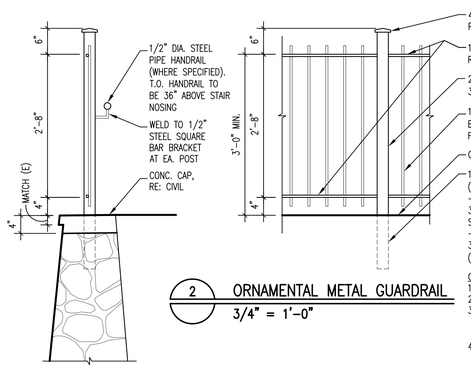

2 ORNAMENTAL METAL GUARDRAIL
3/4" = 1'-0"

ORNAMENTAL GATE AND ORNAMENTAL FENCE NOTES:
1. POSTS, BALLUSTERS, AND HORIZ. RAILS TO BE STEEL.
2. CAST IRON PIECES BY KING ARCHITECTURAL METALS.
3. ALL COMPONENTS TO BE POWDER COATED BLACK (SHOP PAINTED W/ FIELD TOUCH-UPS USING POLYURETHANE PAINT).
4. WHEN ON SLOPING GRADE, RAILING TO BE INSTALLED W/ POSTS + PICKETS VERT. AND HORIZ. RAILS TO FOLLOW THE SLOPE.

ITEMS TO BE SELECTED OR VERIFIED:
1. CONFIRM STREET ELEVATION AT STAIR W/ PUBLIC WORKS
2. AWAITING EGRESS WINDOW MODIFICATION
3. VERIFY HEADER OVER DOOR B, B.O. HEADER AT 6'-8"
4. CONFIRM SLOPE AT HIP ROOF

ON SITE:
** MEASURE ROUGH OPENINGS*
** MEASURE STONES AT FND.*

PROJECT DIRECTORY

CLIENT:
City of Black Hawk
P.O. Box 68
Black Hawk, CO 80422
Cindy Linker
P: 303-582-0615
clinker@cityofblackhawk.org
Tami Archer
P: 303-582-2223
F: 303-582-2239
tarcher@cityofblackhawk.org

OWNER:
Mary Keehfuss & Josh Smith
1237 Indian Creek Trail
Kila, MT 59920
P: (406) 755-0973
marykjoshg@gmail.com

OWNER'S REP:
nv5
1738 Wynkoop Street, Suite 302
Denver, CO 80202
P: 303-501-2784
Jessica Killian, P.E., LEED GA
C: 303-328-5904
jessica.killian@NV5.com

ARCHITECT:
PEH ARCHITECTS
1319 Spruce Street, Suite 207
Boulder, CO 80302
P: 303-442-0408
F: 303-447-1905
Peter E. Heinz, AIA Principal
peheinz@peharchitects.com
Nathan P. Pilfatzke, AIA
nathanp@peharch.com

STRUCTURAL ENGINEER:
Mozer-Renn Structural Services
6000 E. Evans Ave., Suite #1-021
Denver, CO 80222
Natalie Mozer-Renn, P.E.
P: (303) 870-5039
F: (303) 484-8958
mozer-renn@mrstructural.com

MECHANICAL ENGINEER:
Seward Mechanical Systems
801 Main St, Suite 310
Louisville, CO 80027
Paul Seward, P.E.
P: (303) 926-9245
C: (303) 587-5217
seward@steam-engine.com

ELECTRICAL ENGINEER:
JCN Engineering
3281 Routt St.
Wheat Ridge, CO 80033
Jeff Nielsen, P.E.
P: (303) 239-0736
C: (303) 324-1799
jcneng@comcast.net

CIVIL ENGINEER:
Loris & Associates
818 W. South Boulder Road, Suite 200
Louisville, CO 80027
Kevin Dooley, P.E.
P: (303) 444-2073
F: (303) 444-0611
kdooley@lorisandassociates.com

SOILS ENGINEER:
Cesore, Inc.
7108 South Alton Way, Building B,
Centennial, CO 80112
Darin R. Duran, P.E.
P: (303) 220-0300
F: (303) 220-0442
dduran@cesareinc.com

IMPROVEMENT SURVEY PLAT
CCS CONSULTANTS
4860 Robb Street, Suite 101
Wheat Ridge, CO 80033
P: (303) 403-4706
F: (303) 403-0800

INTERIOR DESIGNER:
Bloom Studio, LLC
13538 Raritan Way, Suite 101
Westminster, CO 80234
Heather Portillo, Principal
P: (720) 328-1366
heather@bloomstudiollc.com

PROJECT SUMMARY

BUILDING INFORMATION

BUILDING JURISDICTION: CITY OF BLACK HAWK, COLORADO

BUILDING CODE: IRC, IECC & IEBC 2012

LEGAL DESCRIPTION: LOTS 6, 7, AND 8 BLOCK 17, CITY OF BLACK HAWK, COUNTY OF GILPIN, STATE OF COLORADO, MORE PARTICULARLY DESCRIBED AS FOLLOWS: COMMENCING AT THE SOUTHEAST CORNER OF SAID BLOCK 17, WHENCE THE SOUTHWEST CORNER THEREOF BEARS S 81°07'37" W, 356.00 FEET, WITH ALL BEARINGS CONTAINED HEREIN RELATIVE THERETO; THENCE ALONG SAID SOUTHERLY LINE S 81°07'37" W, 36.00 FEET TO THE TRUE POINT OF BEGINNING; THENCE CONTINUING ALONG SAID SOUTHERLY LINE S 81°07'37" W, 120.00 FEET; THENCE N 08°52'23" W, 100.00 FEET TO A POINT ALONG THE NORTHERLY LINE OF SAID BLOCK; THENCE ALONG SAID NORTHERLY LINE N 81°07'37" E, 120.00 FEET; THENCE S 08°52'23" E, 100.00 FEET TO THE TRUE POINT OF BEGINNING; CONTAINING 0.28 ACRES MORE OR LESS.

BUILDING SETBACKS:	AS-IS	
BUILDING HEIGHT:	14'-4"	14'-4"
BUILDING AREA:	EXISTING:	PROPOSED:
FIRST FLOOR:	816 SF	757 SF
SHED:	153 SF	0 SF
SITE: TOTAL AREA:	12,000 SF	12,000 SF
LOT INFORMATION:	AS-IS	AS-IS
SITE AREA:	12,000 SF	12,000 SF
BUILDING FOOTPRINT:	816 SF	757 SF
SHED FOOTPRINT:	153 SF	0 SF

ABBREVIATIONS KEY

A.C. = ABOVE COUNTER
APPROX. = APPROXIMATELY
BTWN = BETWEEN
CONC. = CONCRETE
CONT. = CONTINUOUS
C.I. = CONTINUOUS INSULATION
DEMO = DEMOLISH
DIA. = DIAMETER
DH = DOUBLE HUNG
D.S. = DOWNSPOUT
EA. = EACH
EM = ELECTRIC METER
EP = ELECTRIC PANEL
(E) = EXISTING
ELEC. = ELECTRIC
F.D. = FLOOR DRAIN
F.F. = FINISHED FLOOR
FG = FIBERGLASS BATT
FND. = FOUNDATION
GA. = GAUGE
G.C. = GENERAL CONTRACTOR
G.I. = GALVANIZED IRON
GM = GAS METER
GYP. BD. = GYPSUM BOARD
H.B. = HOSE BIB
HORIZ = HORIZONTAL
HT. = HEIGHT
I.G.U. = INSULATED GLASS UNIT
MIN. = MINIMUM
MFR. = MANUFACTURER
(N) = NEW
O.C. = ON CENTER
PNT. = PAINT
P.T. = PRESSURE TREATED
RE: = REFERENCE
REF. = REFRIGERATOR
REQ'D = REQUIRED
R.O. = ROUGH OPENING
SIM. = SIMILAR
S&R = SHELF AND ROD
SQ. = SQUARE
#S = NUMBER OF SHELVES
T = TELEPHONE
T&G = TONGUE AND GROOVE
T.O.W. = TOP OF WALL
TC = TRASH COMPACTOR
TYP. = TYPICAL
U.N.O. = UNLESS NOTED OTHERWISE
VERT = VERTICAL
WRB = WEATHER RESISTIVE BARRIER

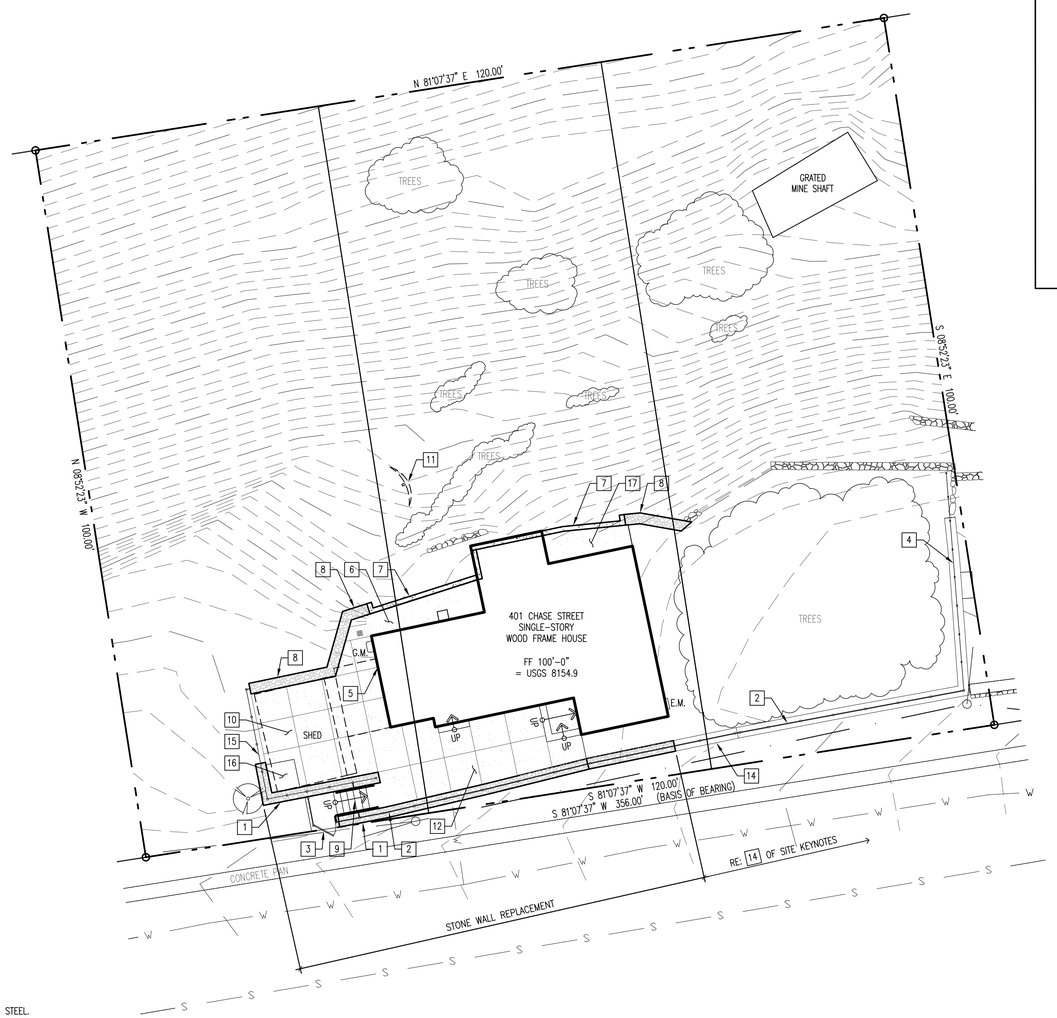

PLAN ⊠ TRUE ⊠

1 SITE PLAN
1" = 10'-0"

0 5 10

NOTE: SURVEY PROVIDED BY CCS CONSULTANTS

SITE- GENERAL NOTES:

1. FIELD VERIFY ALL DIMENSIONS PRIOR TO CONSTRUCTION.
2. REFER TO CIVIL SITE PLAN FOR ADDITIONAL INFORMATION.
3. RESTORE ALL DISTURBED GRADING. PROVIDE EROSION CONTROL MATS. SEED WITH LOW WATER DEMAND NATIVE GRASS MIX, RE: CIVIL.
4. CONTOUR LINES ARE REPRESENTATIVE OF (E) CONDITIONS. (N) CONTOURS ARE PROVIDED ON CIVIL DRAWINGS.
5. GENERAL SLOPE OF SITE PLAN SHOWN FOR REFERENCE, RE: CIVIL DRAWINGS FOR SITE IMPROVEMENTS BEYOND FOOTING OF THE BUILDING.
6. COORDINATE TOP, BOTTOM, AND FLOW LINE ELEVATIONS OF CONCRETE SWALES WITH CIVIL ENGINEER IN THE FIELD. PROVIDE STAKING AND STRINGLINE FOR REVIEW/APPROVAL.

SITE- KEY NOTES:

1. REPLACE STONE RETAINING WALL AND CONC. WALL CAP ALONG CHASE STREET, RE: CIVIL
2. DEMO (E) METAL GUARDRAIL AT TOP OF STONE RETAINING WALL AND REPLACE W/ (N) ORNAMENTAL METAL GUARDRAIL, RE: 2/A000
3. 3'-0" WIDE ORNAMENTAL METAL GATE, RE: 3/A000
4. INSTALL (N) 42" HT. WIRE METAL FENCING CENETERED ALONG (E) CONC. CAPPED STONE RETAINING WALL, RE: 4/A000
5. STUB-OUT FOR GAS GRILL, RE: PLUMBING
6. INSTALL (N) 4" THICK CONC. SWALE SLOPED 5% MIN. TO 8"X8" CAST IRON AREA DRAIN THAT CONNECTS TO UNDERGROUND DRAINAGE PIPE, RE: 5/A000 & CIVIL
7. REPLACE STONE RETAINING WALL W/ (N) COLORED CONC. RETAINING WALL, RE: CIVIL & STRUCTURAL.
8. REPLACE STONE RETAINING WALL, RE: CIVIL
9. (N) CONC. STAIR W/ METAL HANDRAIL, RE: A100 & CIVIL
10. DEMO SHED, CONC. PAN, AND PORTION OF HOUSE, RE: DEMO PLAN
11. DEMO SATELLITE DISH AND CABLE TO 411 CHASE
12. (N) 4" CONC. WALKWAY, RE: CIVIL
13. NOT USED
14. KEEP AS MUCH OF STONE WALLS AS POSSIBLE. ONLY REPLACE WALLS AS REQ'D FOR UTILITY REPLACEMENT, STAIR, AND DOCUMENTED STRUCTURAL FAILURES. ALL REPLACED WALLS SHOULD MATCH (E) AESTHETIC.
15. (N) ORNAMENTAL METAL GUARDRAIL, RE: 2/A000
16. 4'-0"x4'-0" PLANT BED. PROVIDE 4" OF TOP SOIL (NO SEED).
17. INSTALL (N) 4" THICK CONC. SWALE SLOPED 5% MIN. TO LANDSCAPE, RE: 5/A000 & CIVIL

SHEET INDEX

SHEET NUMBER	SHEET TITLE
A000	COVER SHEET AND SITE PLAN
SURVEY	
	TOPOGRAPHIC SURVEY
AS-BUILTS	
AB200	AB FLOOR PLANS
AB400	AB BUILDING SECTIONS
CIVIL	
C100	GENERAL NOTES & SCHEDULE OF VALUES
C200	GRADING, DRAINAGE & UTILITY PLAN
C300	SITE DETAILS
C301	SITE DETAILS
ARCHITECTURAL	
A100	SITE DETAILS
A200	DEMO FLOOR PLAN AND ROOF PLAN
A201	FLOOR PLAN, ROOF PLAN, AND SCHEDULE
A300	EXTERIOR ELEVATIONS
A400	BUILDING SECTIONS
A401	WALL SECTIONS
A600	INTERIOR ELEVATIONS
A800	WINDOW/DOOR DETAILS AND SCHEDULES
STRUCTURAL	
S201	FOUNDATION & FLOOR FRAMING & ROOF FRAMING PLANS
S400	SECTIONS
MECHANICAL AND PLUMBING	
M201	MECHANICAL PLAN
P201	PLUMBING PLAN
MP400	MECHANICAL SPECS
MP401	MECHANICAL DETAILS AND SCHEDULES
MP402	MECHANICAL PIPING DIAGRAM
ELECTRICAL	
E100	ELECTRICAL SITE PLAN, ONE-LINE, AND SCHEDULES
E200	ELECTRICAL LIGHTING AND POWER PLANS, FIXTURE SCHED.

CODE ANALYSIS

HISTORIC BUILDING

PER IEBC SECTION 201, THE PROPERTY IS A HISTORIC BUILDING CERTIFIED AS A CONTRIBUTING RESOURCE WITHIN A LOCALLY DESIGNATED HISTORIC DISTRICT.

EGRESS WINDOW

PER R104.10, ADMINISTRATIVE REVIEW HAS APPROVED THE REUSE OF (E) NON-HISTORIC WINDOW OPENINGS FOR EGRESS WITH INSTALLATION OF NEW NON-HISTORIC WINDOWS X/X/2014.

IECC COMPLIANCE

2012 IECC MINIMUM REQUIREMENTS AS FOLLOWS:

CLIMATE ZONE: 5B	REQ'D:	PROVIDED:
EXTERIOR WALL:	R-20 OR R-13+5 C.I.	R-24
ROOF/CEILING:	R-49	R-49
FLOOR:	R-30	N/A
SLAB FLOOR:	R-10, 2FT DEPTH	N/A
CRAWLSPACE WALL:	R-15 C.I.	R-15 C.I.
BASEMENT WALL:	R-15	N/A
WINDOW/GLAZING:	U-VALUE - 0.32	U-VALUE - 0.31
SKYLIGHT:	U-VALUE - 0.55	N/A

NO.	DATE	REVISION
5.	11/24/14	CONSTRUCTION DOCUMENT SUBMISSION
4.	10/20/14	DESIGN DEVELOPMENT SUBMISSION
3.	09/11/14	SCHEMATIC DESIGN SUBMISSION
2.	08/13/14	CONCEPT FLOOR PLANS
1.	08/08/14	AS-BUILT DRAWINGS

PEH ARCHITECTS
1319 Spruce Street Suite 207
Boulder, CO 80302
303-442-0408, fax: 303-447-1905
e-mail: peheinz@peharchitects.com

401 CHASE STREET REHABILITATION

401 Chase Street, Black Hawk, CO 80422

SHEET TITLE
COVER SHEET AND SITE PLAN

PROJECT: 2014.29
DATE: 07/31/14
DRAWN BY: TCF
CHECKED BY: PEH

SHEET NUMBER
A000

TOPOGRAPHIC MAP OF

LOTS 6-8, BLOCK 17, CITY OF BLACK HAWK
COUNTY OF GILPIN, STATE OF COLORADO

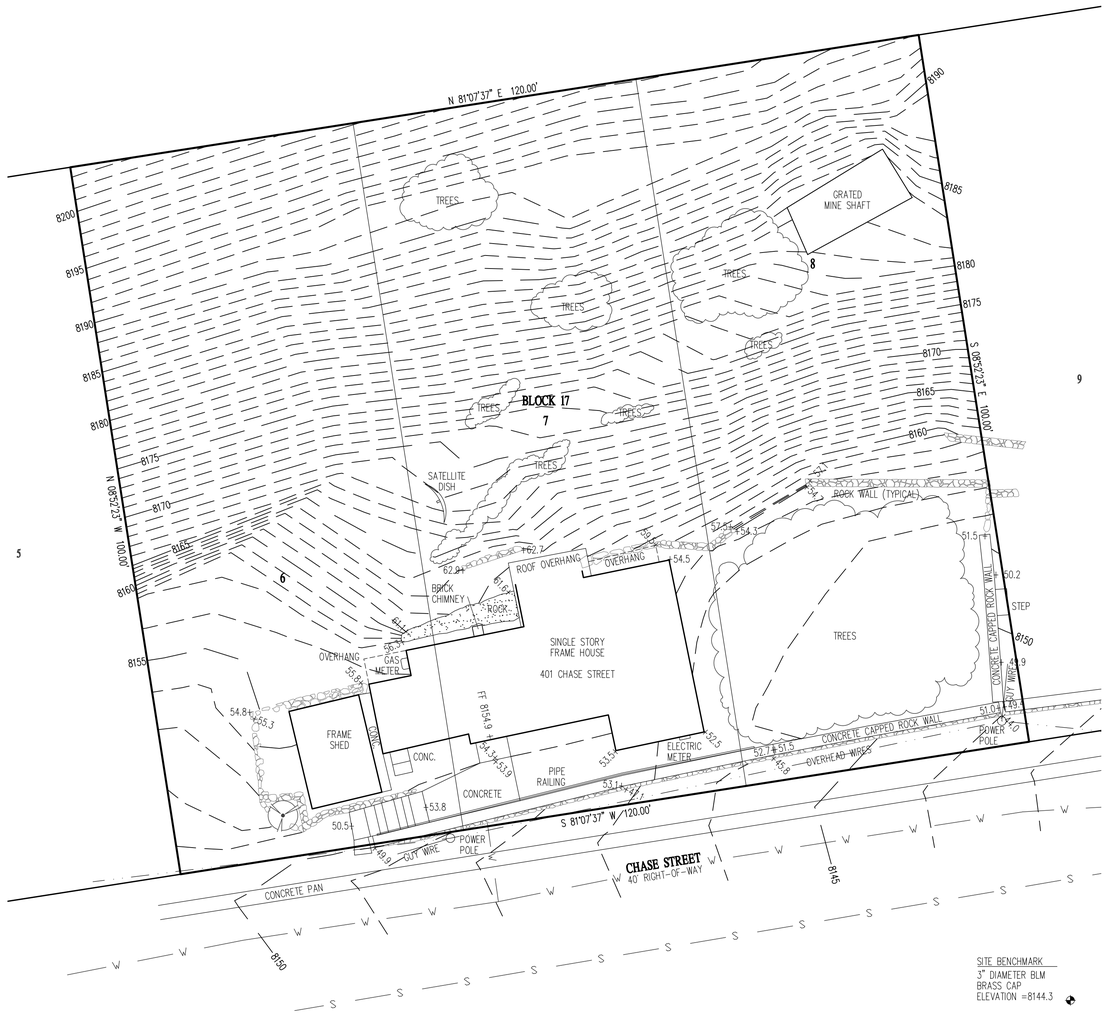

SCALE: 1"=10'
DATE: 06.03.2014

SITE BENCHMARK
3" DIAMETER BLM
BRASS CAP
ELEVATION =8144.3

COLORADO REGISTERED
NEIL L POTTER
26206
06.05.14
PROFESSIONAL LAND SURVEYOR

C.C.S. CONSULTANTS, INC.
4860 Robb Street, Suite 206
Wheat Ridge, Colorado 80033
Phone: 303•403•4706, Fax: 303•403•0800

PROJECT NO.: CCS-BLH\90BLH17\MASTER LOTS 6-8 BLOCK 17<TOPOGRAPHIC MAP>

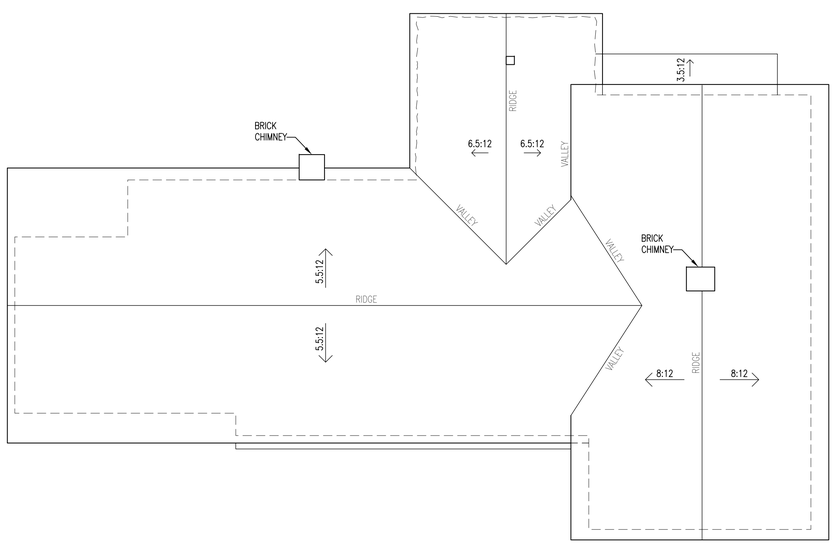

2 AB ROOF PLAN
1/4" = 1'-0"

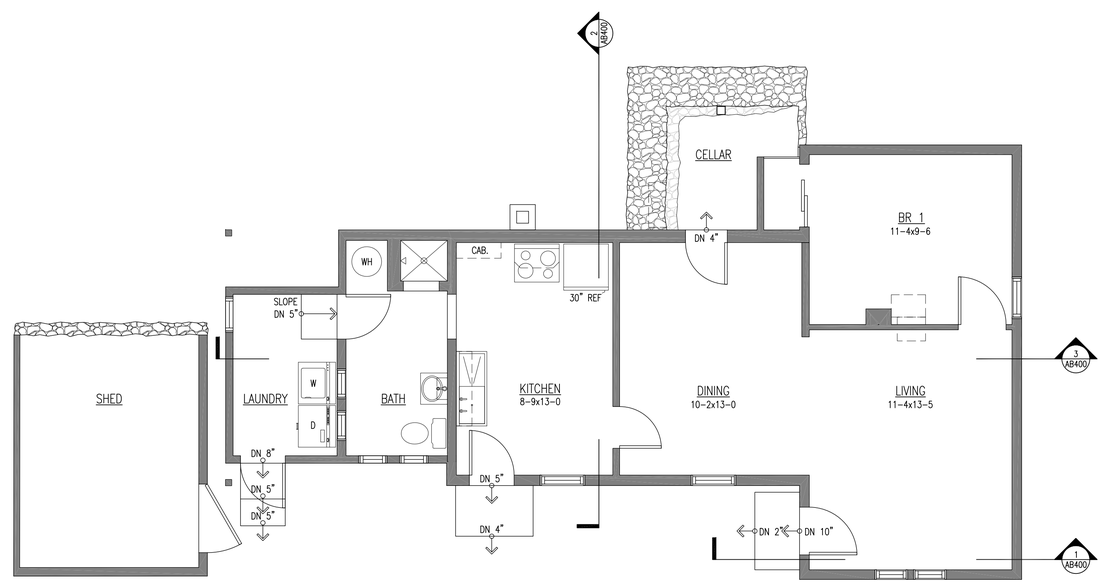

1 AB FIRST FLOOR PLAN
1/4" = 1'-0"

0 2 4

NO.	DATE	REVISION
5.	11/24/14	CONSTRUCTION DOCUMENT SUBMISSION
4.	10/20/14	DESIGN DEVELOPMENT SUBMISSION
3.	09/11/14	SCHEMATIC DESIGN SUBMISSION
2.	08/13/14	CONCEPT FLOOR PLANS
1.	08/08/14	AS-BUILT DRAWINGS

PEH ARCHITECTS
1319 Spruce Street Suite 207
Boulder, CO 80302
303-442-0408, fax: 303-447-1905
e-mail: peheinz@peharchitects.com

401 CHASE STREET REHABILITATION

401 Chase Street, Black Hawk, CO 80422

SHEET TITLE
AS-BUILT FLOOR PLAN AND ROOF PLAN

PROJECT: 2014.29
DATE: 07/31/14
DRAWN BY: TCF
CHECKED BY: PEH

SHEET NUMBER
AB200

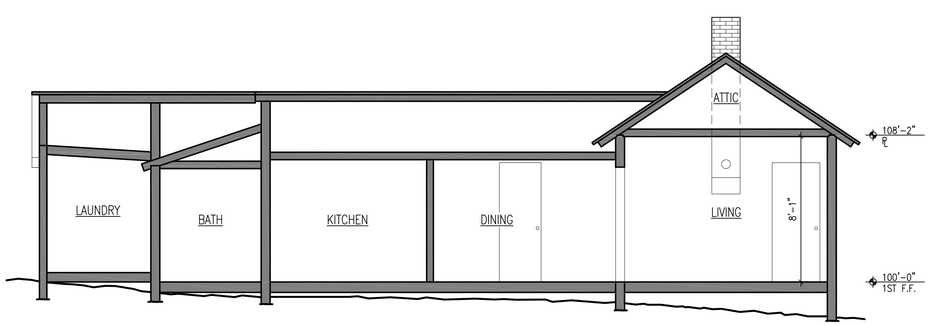

3 AB BUILDING SECTION
1/4" = 1'-0"

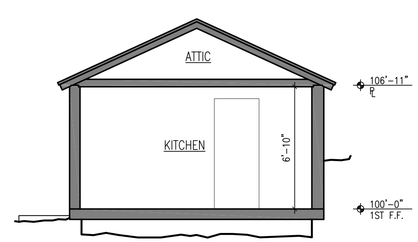

2 AB BUILDING SECTION
1/4" = 1'-0"

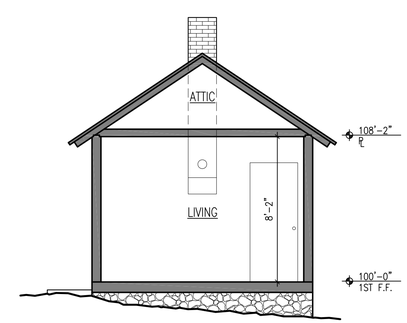

1 AB BUILDING SECTION
1/4" = 1'-0"

0 2 4

NO.	DATE	REVISION
5.	11/24/14	CONSTRUCTION DOCUMENT SUBMISSION
4.	10/20/14	DESIGN DEVELOPMENT SUBMISSION
3.	09/11/14	SCHEMATIC DESIGN SUBMISSION
2.	08/13/14	CONCEPT FLOOR PLANS
1.	08/08/14	AS-BUILT DRAWINGS

PEH ARCHITECTS
1319 Spruce Street Suite 207
Boulder, CO 80302
303-442-0408, fax: 303-447-1905
e-mail: peheinz@peharchitects.com

401 CHASE STREET REHABILITATION

401 Chase Street, Black Hawk, CO 80422

SHEET TITLE
AS-BUILT BUILDING SECTIONS

PROJECT: 2014.29
DATE: 07/31/14
DRAWN BY: TCF
CHECKED BY: PEH

SHEET NUMBER
AB400

GENERAL NOTES:

1-1 COMPLETION OF THE WORK: THE OWNER WILL REQUIRE THAT ALL OF THE WORK BE COMPLETED WITHIN THE TIME SPECIFIED IN THE CONTRACT.

1-2 CONSTRUCTION OBSERVATION: THE OWNER, ARCHITECT AND ENGINEER WILL REVIEW ALL SUBMITTALS AND SUBSTITUTIONS, PROVIDE REGULAR OBSERVATION OF THE PROJECT AND WILL MAKE CERTIFICATES FOR MONTHLY PROGRESS PAYMENTS. TIMELY NOTICE OF READINESS SHALL BE GIVEN TO THE OWNER BY THE CONTRACTOR WHENEVER ANY WORK IS TO BE SPECIFICALLY OBSERVED BY SOMEONE OTHER THAN THE CONTRACTOR. THIS TIMELY NOTICE SHALL BE DEFINED AS 48 HOURS.

1-3 CLEANING UP: THE CONTRACTOR SHALL MAINTAIN A CLEAN WORK AREA AT ALL TIMES AND WILL BE RESPONSIBLE FOR THE DAILY REMOVAL OF NUISANCE DUST ON ROAD SURFACES, MUD, AND CONSTRUCTION DEBRIS, WHETHER CAUSED DIRECTLY BY THE CONTRACTOR'S CONSTRUCTION OPERATION, OR THAT OF HIS/HER SUBCONTRACTORS AND/OR MATERIAL SUPPLIERS, OR INDIRECTLY DUE TO THE WORK SITE CONDITIONS IN GENERAL, FROM ALL PUBLIC ROADS, PRIVATE DRIVEWAYS, AND PARKING LOTS WITHIN OR ADJACENT TO THE PROJECT AREA. AT THE CLOSE OF WORK EACH DAY, THE CONTRACTOR SHALL SCRAPE AND SWEEP SUCH ROADS, DRIVEWAYS, AND PARKING LOTS AS NECESSARY TO LEAVE THEM IN A CLEANED, ACCEPTABLE CONDITION FOR TRAFFIC. THE CONTRACTOR WILL BE RESPONSIBLE FOR ANY DAMAGE DUE TO HIS MAINTENANCE AND/OR CLEANING OPERATIONS.

1-4 IT SHALL BE THE CONTRACTOR'S OBLIGATION TO INSPECT THE SOIL CONDITIONS AND/OR WATER LEVELS PRIOR TO SUBMITTING A BID. BY SUBMITTING A BID, THE CONTRACTOR ACKNOWLEDGES THAT HE HAS SATISFIED HIMSELF AS TO THE NATURE OF THE WORK INCLUDING, BUT NOT RESTRICTED TO, THE SOILS CONDITIONS AFFECTING CONSTRUCTION OF THE WORK, HANDLING AND STORAGE OF MATERIALS, DISPOSAL OF EXCESS MATERIALS AND LEVEL AND AMOUNT OF SURFACE WATER AND GROUNDWATER. THE CONTRACTOR SHALL BE RESPONSIBLE TO OBTAIN ANY SUBSURFACE INFORMATION DEEMED NECESSARY FOR CONSTRUCTION OF THIS PROJECT.

1-5 DISPOSAL SITES: THE CONTRACTOR SHALL BE RESPONSIBLE FOR DISPOSING OF ALL EXCESS MATERIAL REMOVED DURING CONSTRUCTION. ACQUISITION OF DISPOSAL SITES SHALL BE THE RESPONSIBILITY OF THE CONTRACTOR AND SHALL BE SUBJECT TO REVIEW BY THE OWNER.

1-6 TRAFFIC CONTROL PLAN: THE CONTRACTOR SHALL BE RESPONSIBLE FOR PROVIDING A TRAFFIC CONTROL PLAN TO THE CITY OF BLACK HAWK. THE CONTRACTOR SHALL PRESENT TO THE OWNER THE TRAFFIC CONTROL PLAN AND APPROVALS FROM THE NECESSARY ENTITIES PRIOR TO THE START OF CONSTRUCTION. THE CONTRACTOR SHALL PREPARE AND PROVIDE LIGHTS, BARRICADES, SIGNS, FLAG MEN, OR OTHER ITEMS NECESSARY TO ENSURE SAFE TRAFFIC FLOW IN THE VICINITY OF THE WORK AND TO CONFORM TO ALL REQUIREMENTS OF THE CITY OF BLACK HAWK.

1-7 MATERIALS FURNISHED BY OWNER: THE OWNER WILL NOT FURNISH LABOR, EQUIPMENT OR MATERIALS TO THE CONTRACTOR.

1-8 WATER: THE CONTRACTOR IS RESPONSIBLE AT THEIR OWN COST TO PROVIDE WATER FOR COMPACTION, WATER LINE FLUSHING AND TESTING. THE LOCATION OF THE WATER PROVIDED BY THE CONTRACTOR SHALL BE DESIGNATED BY THE PUBLIC WORKS DEPARTMENT AND/OR THE OWNER. THE CONTRACTOR SHALL MAKE ALL PROVISIONS TO HANDLE AND TRANSPORT WATER AS HE REQUIRES WITHOUT ADDITIONAL COST.

1-9 EXISTING UTILITIES: <u>A UTILITY SURVEY WAS NOT COMPLETED FOR THIS PROJECT.</u> THE APPROXIMATE LOCATIONS AND ELEVATIONS OF EXISTING UTILITIES HAVE BEEN INDICATED ON THE DRAWINGS FOR THE CONTRACTORS CONVENIENCE, BUT THE LOCATIONS ARE NOT GUARANTEED TO BE EITHER CORRECT OR COMPLETE, AND THE CONTRACTOR SHALL MAKE SUCH INVESTIGATIONS AS HE DEEMS NECESSARY TO VERIFY THE ACTUAL FIELD LOCATIONS AND ELEVATIONS. THE CONTRACTOR SHALL, PRIOR TO THE START OF EXCAVATION, LOCATE ALL UNDERGROUND UTILITIES AND STRUCTURES SO THAT THEY WILL NOT BE DAMAGED BY HIS OPERATIONS. THE APPROPRIATE UTILITY COMPANY SHALL BE NOTIFIED AT LEAST 72 HOURS PRIOR TO COMMENCING ANY EXCAVATION. THE CONTRACTOR SHALL HOLD THE CITY OF BLACK HAWK & THE ENGINEER HARMLESS FOR ANY DISCREPANCIES OR CONFLICTS INVOLVING EXISTING UTILITIES AND/OR FOR DAMAGES ARISING FROM CONTRACTOR'S FAILURE TO ADEQUATELY PROTECT EXISTING UTILITIES.

1-10 PROTECTION OF PUBLIC AND PRIVATE PROPERTY: ALL STREETS, FENCES, SIDEWALKS, GRAVEL ROADWAYS, LANDSCAPING, RETAINING WALLS, ETC. DISTURBED BY THE CONTRACTOR DURING THE CONSTRUCTION OF THE WORK SHALL BE AT HIS EXPENSE, REPAIRED OR REPLACED AND LEFT IN AS GOOD CONDITION AS FOUND. PROPERTY DAMAGED BY THE CONTRACTOR SHALL BE IMMEDIATELY REPAIRED BY THE CONTRACTOR.

1-11 WHERE THE LOCATION OF THE WORK IN EASEMENTS AND RIGHT-OF-WAY IS SUCH THAT EXCAVATED MATERIAL MAY BE DEPOSITED ON LANDSCAPED AREAS, THE CONTRACTOR SHALL, AT HIS OWN EXPENSE, PROTECT THE LANDSCAPING AND CONSTRUCT BARRIERS AS NEEDED TO PREVENT INCIDENTAL CONTACT WITH THOSE AREAS BY HIS PERSONNEL AND EQUIPMENT. SPECIFIC RESTRICTED AREAS MAY BE NOTED ON THE DRAWINGS. THE CONTRACTOR SHALL TAKE ALL PRECAUTIONS NECESSARY TO PREVENT DAMAGE TO LANDSCAPED AREAS.

1-12 STATE AND LOCAL LAWS: THE CONTRACTOR SHALL CONFORM TO ALL APPLICABLE STATE AND LOCAL LAWS IN CARRYING OUT HIS OBLIGATIONS UNDER THE CONTRACT.

1-13 LIMITS OF CONSTRUCTION: THE CONTRACTOR SHALL LIMIT HIS CONSTRUCTION TO WITHIN THE PROPERTY BOUNDARIES OF THE RESIDENCE HOME OF SUBJECT.

1-14 TRENCH EXCAVATION: THE OWNER EXPECTS TRENCH EXCAVATION WILL REQUIRE A COMBINATION OF BOTH STANDARD EXCAVATION WITH THE USE OF A HYDRAULIC BACKHOE OR SHOVEL AND ROCK EXCAVATION. THE CONTRACTOR SHALL INCLUDE THE COST OF BOTH STANDARD EXCAVATION AND ANY ROCK EXCAVATION THE CONTRACTOR EXPECTS TO BE REQUIRED FOR COMPLETION OF THIS PROJECT AS PART OF THE MATERIALS UNIT COSTS IN THE PROPOSAL.

THE CONTRACTOR SHALL PROVIDE AND MAINTAIN AT ALL TIMES AMPLE MEANS AND DEVICES WITH WHICH TO REMOVE PROMPTLY AND TO PROPERLY DISPOSE OF ALL WATER ENTERING THE TRENCH EXCAVATION SO THAT PIPE LAYING, FORMING AND CONCRETE WORK CAN BE CARRIED ON UNDER DEWATERED CONDITIONS.

1-15 TRENCH MATERIAL: ALL BEDDING AND BACKFILL MATERIAL SHALL HAVE THE APPROVAL OF THE ENGINEER. APPROVED MATERIAL FROM PROJECT EXCAVATIONS SHALL BE USED FOR BACKFILL. ALL BEDDING AND BACKFILL MATERIAL SHALL BE FREE OF FROZEN MATERIAL, ORGANIC MATERIAL AND DEBRIS. THE MATERIALS TO BE USED IN EACH TRENCH ZONE ARE INDICATED IN THE TYPICAL TRENCH DETAILS SHOWN ON THE DRAWINGS AND THESE MATERIALS ARE DESCRIBED BELOW

A. BACKFILL MATERIAL: COMMON BACKFILL MATERIAL SHALL CONSIST OF SUITABLE MATERIAL FROM THE EXCAVATED EARTH. NO BACKFILL MATERIAL SHALL HAVE BOULDERS LARGER THAN 12 INCHES IN ANY DIMENSION. NO BOULDERS OVER 6-INCHES IN ANY DIMENSION SHALL BE ALLOWED IN THE TOP 12 INCHES OF THE TRENCH. THE MATERIAL SHALL HAVE A MOISTURE CONTENT NOT EXCEEDING 3% OF OPTIMUM.

B. SQUEEGEE BEDDING MATERIAL OR SQUEEGEE BACKFILL MATERIAL: SQUEEGEE MATERIAL SHALL BE A CLEAN GRANULAR MATERIAL MEETING THE FOLLOWING GRADATION: CRUSHER FINES MAY BE SUBSTITUTED AS AN ALTERNATE BEDDING MATERIAL.

SIEVE SIZE DESIGNATION	PERCENT BY WEIGHT PASSING
3/8-INCH	100
NO 200	0-5

1-16 PIPELINE INSULATION: THIS MATERIAL SHALL BE CLOSED CELL POLYSTYRENE FOAM OF THE MINIMUM COMPRESSIVE STRENGTH SPECIFIED HEREIN. WATER ABSORPTION SHALL BE NO MORE THAN 0.1% OF VOLUME WHEN TESTED ACCORDING TO ASTM C272. AGED (DESIGN) VALUE OF THERMAL CONDUCTIVITY SHALL BE 0.18 BTU IN/HR WHEN MEASURED AT A MEAN TEMPERATURE OF 25? F IN ACCORDANCE WITH ASTM C177 AND/OR WITH ASTM C518. MINIMUM THICKNESS SHALL BE 2-INCHES. INSULATION SHALL HAVE A MINIMUM COMPRESSIVE STRENGTH OF 40 PSI, SHALL BE DOW STYROFOAM HL40 OR APPROVED EQUAL.

1-17 ASPHALT PAVEMENT: REPLACEMENT OF ASPHALTIC PAVEMENT SHALL BE PERFORMED IN ACCORDANCE WITH THE COLORADO DEPARTMENT OF TRANSPORTATION AND THE CITY OF BLACK HAWK STANDARDS. THE EXCAVATION IN AREAS WITH ASPHALT PAVING MUST BE CONFINED TO A MINIMUM WIDTH AS REQUIRED TO MAINTAIN A SAFE TRENCH CONDITION. THE PAVEMENT SHALL BE CUT VERTICAL AND ON A STRAIGHT LINE.

WATER SYSTEM NOTES:

2-1 CITY OF BLACK HAWK STANDARDS: THE CONSTRUCTION OF THE WATER SERVICE WORK IS SUBJECT TO THE STANDARDS OF THE CITY OF BLACK HAWK. THE CITY STANDARDS SHALL APPLY AS A MINIMUM IN CASE OF CONFLICT BETWEEN THESE SPECIFICATIONS AND THE ENGINEERING STANDARDS OF THE CITY, BUT THE MORE STRINGENT STANDARD SHALL BE FOLLOWED AS LONG AS THE MINIMUM CITY'S STANDARD HAS BEEN MET. MAINTAIN TEN FEET (10') MINIMUM HORIZONTAL SEPARATION BETWEEN THE WATER SERVICE AND SANITARY SEWER SERVICE.

2-2 CONNECTIONS TO EXISTING WATER PIPELINE: ALL CONSTRUCTION INVOLVED IN CONNECTING TO THE EXISTING PIPELINES SHALL BE DONE IN THE PRESENCE OF THE CITY OF BLACK HAWK WATER DEPARTMENT. ALL CONSTRUCTION INVOLVED IN THE CONNECTING TO EXISTING PIPELINES SHALL BE SCHEDULED AND APPROVED BY THE CITY. PROVIDING TEMPORARY THRUST RESTRAINT, AS REQUIRED, SHALL BE THE RESPONSIBILITY OF THE CONTRACTOR. THE CONTRACTOR SHALL COORDINATE THE REPLACEMENT OF THE EXISTING SERVICE CONNECTIONS WITH THE CITY. PROVIDE 24-HOUR MINIMUM NOTICE TO THE WATER DEPARTMENT FOR ANY INSPECTIONS AND OBSERVATIONS.

2-3 WATER SERVICES MATERIALS: MATERIALS FOR WATER SERVICE CONNECTIONS SHALL BE NEW AND THE BEST AVAILABLE. IN THE ABSENCE OF DETAIL INFORMATION, THE REQUIREMENTS OF AWWA C800 SHALL BE FOLLOWED.

A. CORPORATION STOPS: ALL CORPORATION STOPS FOR COPPER PIPE SHALL BE SIMILAR AND EQUAL TO MH15000, THREADED INLET, COUPLING OUTLET, AS MANUFACTURED BY MUELLER COMPANY.

B. COPPER PIPE: THE COPPER PIPE FOR ALL SERVICE CONNECTIONS SHALL CONFORM TO THE REQUIREMENTS SET FORTH IN ASTM B 88, OR ITS LATEST REVISION, AND SHALL BE TYPE K, SOFT ANNEALED.

C. CURB VALVE AND BOX: A MUELLER MH15210 STOP AND WASTE VALVE SHALL BE USED. THE CURB STOP VALVE BOX SHALL BE SIMILAR AND EQUAL TO EA2-75-40-36, AS MANUFACTURED BY FORD, AND SHALL BE COMPLETE WITH LID AND STATIONARY ROD.

D. SERVICE SADDLES: SERVICE SADDLES SHALL BE OF BRONZE CONSTRUCTION. SADDLES ON DIP SHALL BE DOUBLE-STRAP SIMILAR TO FORD S-90, MUELLER H-13400 SERIES, OR EQUAL.

2-4 INSTALLATION OF WATER SERVICES: WATER SERVICE LINES SHALL BE OF THE SAME TYPE MATERIAL FROM BEGINNING TO END, UNLESS THE APPROPRIATE INSULATOR IS INSTALLED AT THE JUNCTIONS OF THE DISSIMILAR METALS. UNLESS NOTED ELSEWHERE IN THE DRAWINGS, WATER SERVICE INSTALLATIONS SHALL BE CONSTRUCTED AS SHOWN IN THE DRAWING'S. ALL SERVICE LINE TAPS SHALL HAVE DOUBLE STRAP BRONZE SERVICE CLAMPS. WATER SERVICES SHALL BE ONE CONTINUOUS PIPE WITHOUT JOINTS OR SPLICES.

2-5 WATER PIPELINE DISINFECTING: ALL WATER PIPING INSTALLED UNDER THIS CONTRACT SHALL BE DISINFECTED IN ACCORDANCE WITH AWWA C651 AND THE STANDARDS OF THE CITY OF BLACK HAWK.

2-6 THE CONTRACTOR IS RESPONSIBLE, AT ITS COST, FOR PROVIDING WATER FOR CONSTRUCTION ACTIVITIES.

SANITARY SEWER SYSTEM NOTES:

3-1 BLACK HAWK/CENTRAL CITY SANITATION DISTRICT STANDARDS: THE CONSTRUCTION OF THE SANITARY SEWER SERVICE WORK IS SUBJECT TO THE STANDARDS OF THE BLACK HAWK/CENTRAL CITY SANITATION DISTRICT (DISTRICT). THE DISTRICT STANDARDS SHALL APPLY AS A MINIMUM IN CASE OF CONFLICT BETWEEN THESE SPECIFICATIONS AND THE ENGINEERING STANDARDS OF THE DISTRICT, BUT THE MORE STRINGENT STANDARD SHALL BE FOLLOWED AS LONG AS THE MINIMUM DISTRICT'S STANDARD HAS BEEN MET.

3-2 SANITARY SERVICE CONNECTIONS: THE CONTRACTOR SHALL COORDINATE THE REPLACEMENT OF THE EXISTING SERVICE CONNECTIONS WITH THE CITY. A REPRESENTATIVE OF THE BLACK HAWK/CENTRAL CITY SANITATION DISTRICT MUST BE PRESENT TO WITNESS THE SANITARY SEWER CONNECTION AND/OR THE ABANDONING OF THE EXISTING SERVICE. THE CONTRACTOR SHALL PROVIDE 72 HOUR NOTICE TO THE DISTRICT.

3-3 SEWER SERVICE MATERIALS: MATERIALS FOR SEWER SERVICE CONNECTIONS SHALL BE NEW AND THE BEST AVAILABLE QUALITY.

A. SEWER SERVICE PIPE SHALL BE PVC CONFORMING TO ASTM D2241, WITH A THICKNESS NOT LESS THAN C900 DR-18. SANITARY SEWER SERVICE PIPE SHALL BE GREEN OR OTHER ACCEPTABLE COLOR.

B. SERVICE LINE CLEAN OUTS, WHERE REQUIRED, SHALL CONFORM TO THE "SERVICE LINE CLEAN OUT DETAIL". CLEAN OUTS ARE REQUIRED FOR ANY SIGNIFICANT (GREATER THAN 10° DEFLECTION) CHANGE IN THE SERVICE LINE DIRECTION AND AT INTERVALS NO GREATER THAN 100 FEET OR AS REQUIRED BY THE LOCAL BUILDING AUTHORITY.

C. THE SIZE AND SLOPE OF THE SERVICE SEWER SHALL BE SUBJECT TO THE APPROVAL OF THE DISTRICT, BUT IN NO EVENT SHALL THE DIAMETER BE LESS THAN 4 INCHES WITH A MINIMUM GRADE OF 2%.

D. PIPE LAYING SHALL PROCEED UPGRADE WITH THE SPIGOT ENDS OF PIPE POINTING IN THE DIRECTION OF THE FLOW, UNLESS OTHERWISE APPROVED BY THE ENGINEER. EACH PIPE LENGTH SHALL BE LAID TRUE TO LINE AND GRADE IN SUCH MANNER AS TO FORM A CLOSE CONCENTRIC JOINT WITH THE ADJOINING PIPE AND TO PREVENT SUDDEN OFFSETS TO THE FLOW LINE. PIPE SHALL BE LAID IN AN UN-WATERED TRENCH AND SHALL NOT BE USED FOR DRAINING WATER FROM THE TRENCH.

3-4 PROTECTION OF POTABLE WATER PIPELINES: THE CONTRACTOR SHALL USE PVC PIPE CONFORMING TO ASTM D2241, WITH A THICKNESS NOT LESS THAN C900 DR-18 AS ENCASEMENT WHEN A SANITARY SEWER PIPELINE CROSSES AN EXISTING WATER PIPELINE OR THE SANITARY SEWER PIPELINE IS FOUND TO BE LESS THAN 10 FEET HORIZONTALLY FROM A WATER PIPELINE WHICH IS PARALLEL OR CONVERGING TO THE SEWER PIPELINE. THE LENGTH OF THE ENCASEMENT SHALL BE SUCH THAT THE PORTION OF THE SEWER PIPELINE THAT IS NOT ENCASED IS 10 FEET OR GREATER APART HORIZONTALLY ON BOTH SIDES OF THE WATER PIPELINE. COSTS SHALL BE INCLUDED IN THE WORK.

3-5 PIPELINE FLUSHING: THE CONTRACTOR SHALL FLUSH THE PIPELINES, AS THE WORK PROGRESSES, BY MEANS THAT ARE IN ACCORDANCE WITH THE BLACK HAWK/CENTRAL CITY SANITATION DISTRICT STANDARDS, TO INSURE THAT EARTH, SAND, ROCKS OR OTHER FOREIGN MATERIALS ARE REMOVED FROM THE INTERIOR OF THE PIPELINE COORDINATE WITH PUBLIC WORKS AND THE SANITATION DISTRICT.

3-6 LEAKAGE: THE CONTRACTOR SHALL PERFORM A LEAKAGE TEST WITH THE PRESENCE OF THE ENGINEER AND A REPRESENTATIVE OF THE CENTRAL CITY/BLACK HAWK SANITATION DISTRICT.

ELECTRICAL/ GAS/ COMMUNICATION:

4-1 GENERAL: BEFORE BEGINNING CONSTRUCTION, THE CONTRACTOR SHALL BE RESPONSIBLE FOR NOTIFYING ALL AFFECTED UTILITY COMPANIES TO FIELD VERIFY ALL UTILITY LOCATIONS IN THE PROJECT AREA. THE CONTRACTOR IS RESPONSIBLE FOR LOCATING AND PROTECTING ALL UTILITIES IN THE PROJECT AREA. THE CONTRACTOR IS ALSO RESPONSIBLE FOR COORDINATING WITH THE UTILITY COMPANIES FOR RELOCATION OF ANY UTILITIES SHOWN ON THE PLANS.

THE ENGINEER HAS ENDEAVORED TO LOCATE AND SHOW ON THE PLANS THE APPROXIMATE LOCATIONS OF ALL PRIVATE AND PUBLIC UTILITIES AND FACILITIES TO BE ENCOUNTERED DURING CONSTRUCTION. HOWEVER, IT IS POSSIBLE THAT DURING THE WORK UNKNOWN SUBSTRUCTURES REQUIRING RELOCATION OR PROTECTION MAY BE ENCOUNTERED. IN THE EVENT EITHER THE PROTECTION OR THE RELOCATION IS TO BE ACCOMPLISHED BY THE CONTRACTOR, THE PROCEDURES OF THE GENERAL PROVISIONS SHALL BE USED. IN THE EVENT PROTECTION OR RELOCATION IS ACCOMPLISHED BY THE CITY OR BY OTHERS, THE CONTRACTOR SHALL PROVIDE TIME AND WORKING SPACE AND MAY BE ENTITLED TO AN EXTENSION OF TIME FOR COMPLETION UNDER THE APPROVAL OF THE CITY.

4-2 GAS SERVICE: THE CONTRACTOR SHALL COORDINATE PROPOSED WORK FOR THE EXISTING GAS SERVICE AS SHOWN ON THE PLAN. COORDINATION, MEETINGS, AND ANY OTHER TIME OR MATERIALS ASSOCIATED WITH COORDINATION SHALL BE INCLUDED IN THE COST OF THE PROPOSED LUMP SUM WORK ITEM AND WILL NOT BE PAID FOR SEPARATELY. THE LOCAL GAS COMPANY, XCEL ENERGY, MAY PROVIDE ADDITIONAL ON-SITE DIRECTION FOR ANY WORK ASSOCIATED WITH GAS AND/OR ELECTRICAL SERVICES. THE LOCAL CONTACT FOR XCEL ENERGY IS JEANNIE AGRIESTI, (303) 445-4549.

4-3 THE CONTRACTOR IS RESPONSIBLE, AT ITS COST, FOR PROVIDING ELECTRICAL SERVICE FOR CONSTRUCTION ACTIVITIES.

SCHEDULE OF VALUES:

5-1 <u>GENERAL:</u> THE REPLACEMENT OF THE UNDERGROUND UTILITIES, GRADING AND RESTORATION IS LOCATED AT 401 CHASE STREET IN THE CITY OF BLACK HAWK, COLORADO.

THE CONTRACTOR SHALL SUBMIT FOR APPROVAL, IN A FORM ACCEPTABLE TO THE OWNER AND ARCHITECT, A COMPLETE SCHEDULE OF VALUES OF THE VARIOUS PORTIONS OF THE WORK, INCLUDING QUANTITIES AND UNIT PRICES, TOTALING THE CONTRACT PRICE. THE SCHEDULE SHALL SUBDIVIDE THE WORK INTO COMPONENT PARTS AS LISTED BELOW. OVERHEAD AND PROFIT SHALL BE INCLUDED AS A SEPARATED LINE ITEM.

THE FOLLOWING ITEMS ARE MADE UP OF COMPONENTS DESCRIBED IN SEVERAL INDIVIDUAL SECTIONS. PAYMENT FOR THESE ITEMS IS DESCRIBED BELOW. THE CONTRACTOR IS REFERRED TO THE SPECIFIC TECHNICAL SECTIONS THAT APPLY TO THE INDIVIDUAL COMPONENTS. NOTE THAT THE DESCRIPTIONS BELOW ARE NOT INTENDED TO BE COMPREHENSIVE LISTINGS OF EACH AND EVERY WORK ITEM INCLUDED IS THE BID ITEM.

5-2 <u>SITE DEMOLITION:</u> THIS ITEM CONSISTS OF ALL ITEMS REQUIRED TO REMOVE EXISTING WALLS, CONCRETE, TREES, CLEARING & GRUBBING, LANDSCAPING, UTILITY SERVICES AND OTHER SITE REMOVALS WHERE SHOWN ON DRAWINGS. THE WORK SHALL INCLUDE THE REMOVAL AND LAWFUL DISPOSAL OF ALL ITEMS OR DELIVERY TO THE CITY AND/OR OWNER OF SPECIFIC ITEMS WHERE SHOWN ON THE PLANS. THIS WILL BE PAID ON A LUMP SUM BASIS AS A PERCENTAGE OF COMPLETION OF THE PROJECT.

5-3 <u>ROCK EXCAVATION:</u> THIS WORK ITEM INCLUDES ALL REQUIRED ROCK EXCAVATION FOR WALLS, FOUNDATIONS, CRAWL SPACE, AND DRAINS, PIPING (INTERIOR AND EXTERIOR), FORMWORK, & SITE WORK. THE CONTRACTOR SHALL BECOME FAMILIAR WITH THE GEOTECHNICAL REPORT FOR THIS SITE, AND INCLUDE ALL ASSOCIATED COSTS FOR AREAS ROCK EXCAVATION IN THIS BID ITEM. ROCK EXCAVATION IS DEFINED AS ANY WORK THAT A BACKHOE CANNOT DIG AND A HYDRAULIC HAMMER IS REQUIRED TO BE BROUGHT TO THE SITE TO BREAK ROCK, OR IF BLASTING IS REQUIRED OR PREFERRED. THE GEOTECHNICAL ENGINEER MAY BE REQUIRED TO BE PRESENT FOR ROCK EXCAVATION OR SCALING THAT MAY REQUIRED. THE CONTRACTOR SHALL COORDINATE WITH THE CITY/OWNER FOR THE REQUIRED PRESENCE OF THE GEOTECHNICAL ENGINEER IF NECESSARY. THIS ITEM WILL BE PAID FOR ON COMPLETION AS A LUMP SUMP ITEM FOR THE ENTIRE SITE.

5-4 <u>6-INCH ROOFDRAIN SYSTEM:</u> THIS WORK ITEM INCLUDES INSTALLATION OF A DRAINAGE COLLECTION SYSTEM FROM THE REAR OF THE HOUSE TO AND FROM THE LOCATIONS SHOWN ON THE PLANS AND DETAILS. RODENT PROTECTION SCREENS (SIMILAR TO "AGRI DRAIN-MILD STEEL PRODUCTS") SHALL BE INSTALLED AT ALL DRAINAGE OUTFALLS, AND INCLUDED IN THE COST OF THE WORK. THIS ITEM CONSISTS OF ALL ITEMS RELATED TO THE INSTALLATION OF THE ROOF UNDERDRAIN SYSTEM AND AREA DRAIN INCLUDING ALL EXCAVATION, TRENCHING, BEDDING, COST OF MATERIALS AND INSTALLATION OF THE SDR-35 PVC PIPE, FITTINGS, WYES, CORING & GROUTING WALLS AT OUTFALLS, AND ALL OTHER WORK ASSOCIATED WITH THE ROOFDRAIN SYSTEM AS SHOWN ON THE PLAN AND DETAILS. THIS ITEM WILL BE PAID FOR ON COMPLETION AS A LUMP SUM ITEM.

5-5 <u>ROCK RETAINING WALLS:</u> THIS WORK ITEM INCLUDES CONSTRUCTING ROCK RETAINING WALLS, CONCRETE STAIRS, AND WALL REPAIR. THIS ITEM CONSISTS OF ALL ITEMS RELATED TO RETAINING WALL NEW CONSTRUCTION, RECONSTRUCTION, OR REPAIR AT THE FRONT OF THE PROPERTY AND BEHIND THE RESIDENCE, INCLUDING EXCAVATION, COMPACTION, BACKFILL, FILTER MATERIAL, CONCRETE FOOTINGS, REINFORCING STEEL, PERFORATED DRAINS, 4-INCHES OF TOPSOIL, NATIVE SEEDING AND MULCH APPLIED TO ALL DISTURBED AREAS, COST OF MATERIALS AND ALL OTHER ASSOCIATED WORK. THE CONTRACTOR SHALL CONSTRUCT WALLS ACCORDING TO THE CITY OF BLACK HAWK STANDARD WALL DETAILS TO THE LINES AND GRADES PROVIDED ON THE PLANS.

THE CONTRACTOR SHALL INCLUDE THE REPAIR OF WALLS AS INDICATED ON THE PLANS AS A "REPAIR". FOR THE PURPOSE OF THESE PLANS, "REPAIR" SHALL BE KNOWN TO MEAN THAT THE CONTRACTOR SHALL CLEAN THE WALL OF DIRT, DEBRIS, SILT, & LOOSE MORTAR WITH SPECIALIZED CLEANING AGENTS, REPLACE BROKEN, CRACKED, OR IMPROPERLY SIZED STONES W/ NEW ROCKS, REMOVE, CLEAN & REPLACE LOOSE STONES, AND RE-POINTING THE GROUT WITH A SIMILAR COLORED AND FINISHING STYLE MORTAR. EXISTING STONE WALL MATERIAL SHALL BE REUSED WHERE POSSIBLE, AND THE CONTRACTOR SHALL PROVIDE ADDITIONAL STONE MATERIAL AS NEEDED TO COMPLETE THE WALL CONSTRUCTION. REUSED STONE SHALL BE CLEANED OF CONCRETE MORTAR OR WILL BE REJECTED FOR USE ON THE WALLS. THIS ITEM WILL BE PAID FOR ON COMPLETION AS A LUMP SUMP ITEM.

"RECONSTRUCTION" OF WALLS SHALL MEAN THAT THE CONTRACTOR IS TO CAREFULLY REMOVE, CLEAN, AND RECONSTRUCT THE EXISTING ROCK WALLS IN CONFORMANCE WITH THE BLACK HAWK STANDARD WALL DETAILS. SALVAGE STONE FROM EXISTING WALLS, TO BE REUSED IN THE RECONSTRUCTION OF THE NEW WALL. RECONSTRUCTED WALLS SHALL MATCH THE AESTHETIC OF THE EXISTING WALL REMOVED. THERE MAY BE NEED FOR VARIOUS WALL AESTHETICS TO MATCH EXISTING CONDITIONS. NEW STONE SHALL BE BROUGHT ON AS NEEDED TO COMPLETE THE WORK.

5-6 <u>4-INCH FOUNDATION DRAIN SYSTEM:</u> THIS WORK ITEM INCLUDES INSTALLATION OF A 4-INCH PERFORATED FOUNDATION DRAIN AT THE LOCATIONS SHOWN ON THE PLANS. THIS ITEM CONSISTS OF ALL ITEMS RELATED TO THE INSTALLATION OF THE FOUNDATION DRAIN SYSTEM INCLUDING SOIL EXCAVATION, ROCK EXCAVATION, TRENCHING, BEDDING, COST OF MATERIALS AND INSTALLATION OF THE 4-INCH PERFORATED ADS N-12 HDPE PIPE, CONNECTION TO THE PROPOSED 6-INCH ROOF DRAIN PIPES AND ALL NECESSARY CONNECTION FITTINGS, BACKFILL, GRADING, TESTING, MIRAFI 140N FILTER FABRIC (OR APPROVED EQUAL), STAPLES, WASHED ROCK, AND ALL OTHER WORK ASSOCIATED WITH THE FOUNDATION DRAIN SYSTEM. THIS ITEM WILL BE PAID FOR ON COMPLETION AS A LUMP SUMP ITEM.

5-7 <u>CONCRETE FLAT WORK:</u> THIS ITEM CONSISTS OF ALL WORK ASSOCIATED WITH THE INSTALLATION OF THE PROPOSED CONCRETE FLAT WORK AS SHOWN ON THE PLANS. IT SHALL INCLUDE ALL MATERIALS, LABOR, FORMWORK, AND ANY OTHER WORK NECESSARY TO COMPLETE THE CONCRETE WORK COMPLETE AND ACCEPTED IN-PLACE. CONCRETE SHALL MEET OR EXCEED CDOT CLASS D STANDARDS, AND BE PLACED AT A 4-INCH MINIMUM THICKNESS. JOINTS SHOWN ON THE PLANS ARE APPROXIMATE, BUT SHALL BE FOLLOWED TO THE GREATEST EXTENT POSSIBLE. JOINTS SHALL BE TOOLED UNLESS OTHERWISE DETERMINED IN THE FIELD. THIS ITEM WILL BE PAID FOR ON COMPLETION OF THE WORK AS A LUMP SUM ITEM.

5-8 <u>SANITARY SEWER SERVICE PIPELINE REMOVAL & REPLACEMENT:</u> THIS WORK ITEM INCLUDES REMOVAL & REPLACEMENT OF 4-INCH SANITARY SEWER SERVICE FROM EXISTING SERVICE WYE AT THE MAIN TO THE LOCATION SHOWN ON THE PLANS OR AS DEEMED NECESSARY BY THE CITY OF BLACK HAWK, AND INCLUDING ONE CLEAN OUT. THE EXISTING WYE AT THE MAIN SHALL REMAIN. THIS ITEM CONSISTS OF ALL ITEMS RELATED TO THE INSTALLATION OF THE SANITARY SEWER SERVICE INCLUDING EXCAVATION, TRENCHING, BEDDING, COST OF MATERIALS AND INSTALLATION OF THE 4-INCH C-900 DR-18 PVC PIPE TO HOUSE, CLEAN OUT, BOARD INSULATION AT HOUSE CONNECTION, BACKFILL, GRADING, ASPHALT PATCHING, TESTING, AND ALL OTHER WORK ASSOCIATED WITH THE SANITARY SERVICE LINE CONNECTION. THIS ITEM WILL BE PAID FOR ON COMPLETION AS A LUMP SUM ITEM.

5-9 <u>EXISTING WATER SERVICE REMOVAL & REPLACEMENT:</u> THIS WORK ITEM INCLUDES REMOVAL OF THE EXISTING WATER SERVICE FROM THE EXISTING CORPORATION STOP AT THE WATER MAIN IN CHASE STREET TO THE LOCATION SHOWN ON THE PLANS OR AS DEEMED NECESSARY BY THE CITY OF BLACK HAWK AND AS SHOWN ON THE DETAILS. A NEW SERVICE SHALL BE INSTALLED PER THE CITY OF BLACK HAWK STANDARD DETAILS AT THE LOCATION SHOWN ON THE PLANS. THIS ITEM CONSISTS OF ALL ITEMS RELATED TO THE INSTALLATION OF THE WATER SERVICE INCLUDING EXCAVATION, TRENCHING, BEDDING, COST OF MATERIALS AND INSTALLATION OF THE SERVICE PIPE AND NECESSARY APPURTENANCES, BOARD INSULATION AT HOUSE CONNECTION, BACKFILL, GRADING, ASPHALT REMOVAL & PATCHING, CONCRETE REPLACEMENT, TESTING, AND ALL OTHER WORK ASSOCIATED WITH THE WATER SERVICE LINE CONNECTION. WATER SERVICE SHALL BE BURIED TO A DEPTH NO LESS THAN 7'-0" UNLESS OTHERWISE APPROVED IN THE FIELD BY THE CITY. THIS ITEM WILL BE PAID FOR ON COMPLETION AS A LUMP SUM ITEM FOR THE CONNECTED AND APPROVED SERVICE.

5-10 <u>TOPSOIL, SEED, AND MULCH:</u> THIS WORK ITEM INCLUDES INSTALLATION OF FOUR (4) INCHES OF TOPSOIL, NATIVE GRASS SEED MIX, AND MULCH IN THE ENTIRE LIMITS OF THE DISTURBED AREA OF THE PROPERTY. THIS ITEM CONSISTS OF ALL WORK RELATED TO THE INSTALLATION TOPSOIL, SEED, AND MULCH, INCLUDING CLEARING AND GRUBBING OF THE EXISTING FRONT YARD VEGETATION AND COVER, IMPORTING AND STOCKPILING TOPSOIL, GRADING, SEED MIX, MULCH, MULCH TACKIFIER, AND ALL OTHER ASSOCIATED WORK. THE CONTRACTOR SHALL PROVIDE TEMPORARY IRRIGATION TO THE SEED UNTIL 70% GROWTH HAS OCCURRED OR UNTIL ACCEPTED BY THE CITY/OWNER. REFER TO THE CITY OF BLACK HAWK STANDARDS AND SPECIFICATIONS FOR THE REQUIRED SEED MIX. THIS ITEM WILL BE PAID FOR ON COMPLETION AS A LUMP SUMP ITEM.

5-11 <u>ELECTRICAL, TELEPHONE, AND CABLE SERVICES:</u> THIS WORK ITEM INCLUDES INSTALLING CONDUIT FOR THE FUTURE UNDERGROUND RELOCATION OF EXISTING CABLE, FIBER OPTIC, & TELEPHONE SERVICE TO BELOW GRADE FROM THE STREET TO BEHIND THE WALL IN SEPARATE 2-INCH PVC CONDUITS, OR AS DIRECTED IN THE FIELD BY THE SERVICE PROVIDER. IT SHALL ALSO INCLUDE COORDINATION WITH SERVICE PROVIDERS AND ANY WORK ASSOCIATED WITH REMOVING AND REINSTALLING THE EXISTING OVERHEAD UTILITY SERVICES. LOCATION OF THE CONDUITS SUBJECT TO CHANGE IF DIRECTED TO DO SO BY UTILITY OWNERS. ANY CHANGE IN LOCATION WILL NOT BE CONSIDERED GROUNDS FOR ADDITIONAL CONTRACT FEES, UNLESS THE NATURE OF THE WORK IS SUBSTANTIALLY DIFFERENT FROM WHAT IS SHOWN ON THE PLANS. BACKFILL SHALL BE PLACED BY THE CONTRACTOR OVER THE CONDUITS TO CONSTRUCT THE IMPROVEMENTS OVER CONDUIT TO THE GRADES SHOWN ON THE PLANS. THIS ITEM CONSISTS OF ALL ITEMS RELATED TO THE INSTALLATION OF THE CONDUITS AS LOCATED ON THE PLANS INCLUDING EXCAVATION, TRENCHING, BEDDING, COST OF MATERIALS AND INSTALLATION OF THE CONDUIT BACKFILL, GRADING, ASPHALT PATCHING, TESTING, ALL COORDINATION AND ALL OTHER WORK ASSOCIATED WITH THE INSTALLATION OF CONDUIT AND RELOCATION OF UNDERGROUND UTILITIES. CONDUIT SHALL BE INSTALLED A MINIMUM OF 30 INCHES BELOW FINISHED GRADE OF STREET AND EXTENDED TO THE LOCATIONS SHOWN ON THE PLANS AND DETAILS. THIS ITEM WILL BE PAID AS A LUMP SUM ON COMPLETION OF WORK.

5-12 <u>REPLACEMENT OF GAS SERVICE:</u> THIS WORK ITEM INCLUDES PREPARATION AND COORDINATION FOR THE UNDERGROUND REMOVAL AND REPLACEMENT OF THE EXISTING UNDERGROUND GAS SERVICE. IT SHALL INCLUDE PREPARATION (EXCAVATION OR FILL) AS REQUIRED FOR THE REMOVAL AND INSTALLATION OF EXISTING AND NEW GAS SERVICE LINE BY XCEL ENERGY. LOCATION OF THE SERVICE SUBJECT TO CHANGE IF DIRECTED TO DO SO BY XCEL. ANY CHANGE IN LOCATION WILL NOT BE CONSIDERED GROUNDS FOR ADDITIONAL CONTRACT FEES, UNLESS THE NATURE OF THE WORK IS SUBSTANTIALLY DIFFERENT FROM WHAT IS SHOWN ON THE PLANS. BACKFILL SHALL BE PLACED BY THE CONTRACTOR OVER THE NEW SERVICE IN ORDER TO CONSTRUCT THE IMPROVEMENTS TO THE GRADES SHOWN ON THE PLANS. THIS ITEM CONSISTS OF ALL PREPARATION AND COORDINATION ITEMS RELATED TO THE REMOVAL AND INSTALLATION OF THE GAS SERVICE BY XCEL ENERGY AS LOCATED ON THE PLANS INCLUDING EXCAVATION, TRENCHING, BEDDING, COST OF MATERIALS AND INSTALLATION OF THE TRENCH BACKFILL, GRADING, ASPHALT PATCHING, TESTING, ALL COORDINATION AND ALL OTHER WORK ASSOCIATED WITH THE REMOVAL AND INSTALLATION OF THE NEW GAS SERVICE. XCEL ENERGY WILL PROVIDE LABOR AND MATERIALS AS NECESSARY TO REMOVE AND INSTALL THE SERVICE. THIS ITEM WILL BE PAID AS A LUMP SUM ON COMPLETION OF WORK.

5-12 <u>ASPHALT PATCHING (FULL DEPTH):</u> THIS WORK ITEM INCLUDES ASPHALT PATCHING FROM NEW RETAINING WALL TO THE EDGE OF EXISTING PAVEMENT. ASPHALT PATCH SHALL BE FULL DEPTH OF EXISTING SECTION, OR A MINIMUM OF 5 INCHES OF HOT MIX ASPHALT (PG 58-28) ON 6 INCHES OF AGGREGATE BASE COURSE, CLASS 6. THIS ITEM CONSISTS OF ALL WORK RELATED TO ASPHALT PATCHING, INCLUDING EXCAVATION, PREPARATION, TACK COATING, AGGREGATE, ASPHALT CEMENT, ASPHALT RECYCLING AGENTS, ADDITIVES, COMPACTION, TESTING AND ALL OTHER WORK NECESSARY TO COMPLETE ASPHALT PATCHING (FULL DEPTH). THIS ITEM WILL BE PAID FOR ON COMPLETION AS A LUMP SUM ITEM.

NO.	DATE	REVISION
5.	11/24/14	CONSTRUCTION DOCUMENT SUBMISSION
4.	10/20/14	DESIGN DEVELOPMENT SUBMISSION
3.	09/11/14	SCHEMATIC DESIGN SUBMISSION
2.	08/13/14	CONCEPT FLOOR PLANS
1.	08/08/14	AS-BUILT DRAWINGS

PEH ARCHITECTS
1319 Spruce Street Suite 207
Boulder, CO 80302
303-442-0408, fax: 303-447-1905
e-mail: peheinz@peharchitects.com

401 CHASE STREET REHABILITATION

401 Chase Street, Black Hawk, CO 80422

Loris and Associates, Inc.
818 W. South Boulder Rd. #200
Louisville, Colorado 80027
303.444.2073

SHEET TITLE
GENERAL NOTES & SCHEDULE OF VALUES

PROJECT: 2014.29
DATE: 07/31/14
DRAWN BY: KFD
CHECKED BY: PJL

SHEET NUMBER
C100

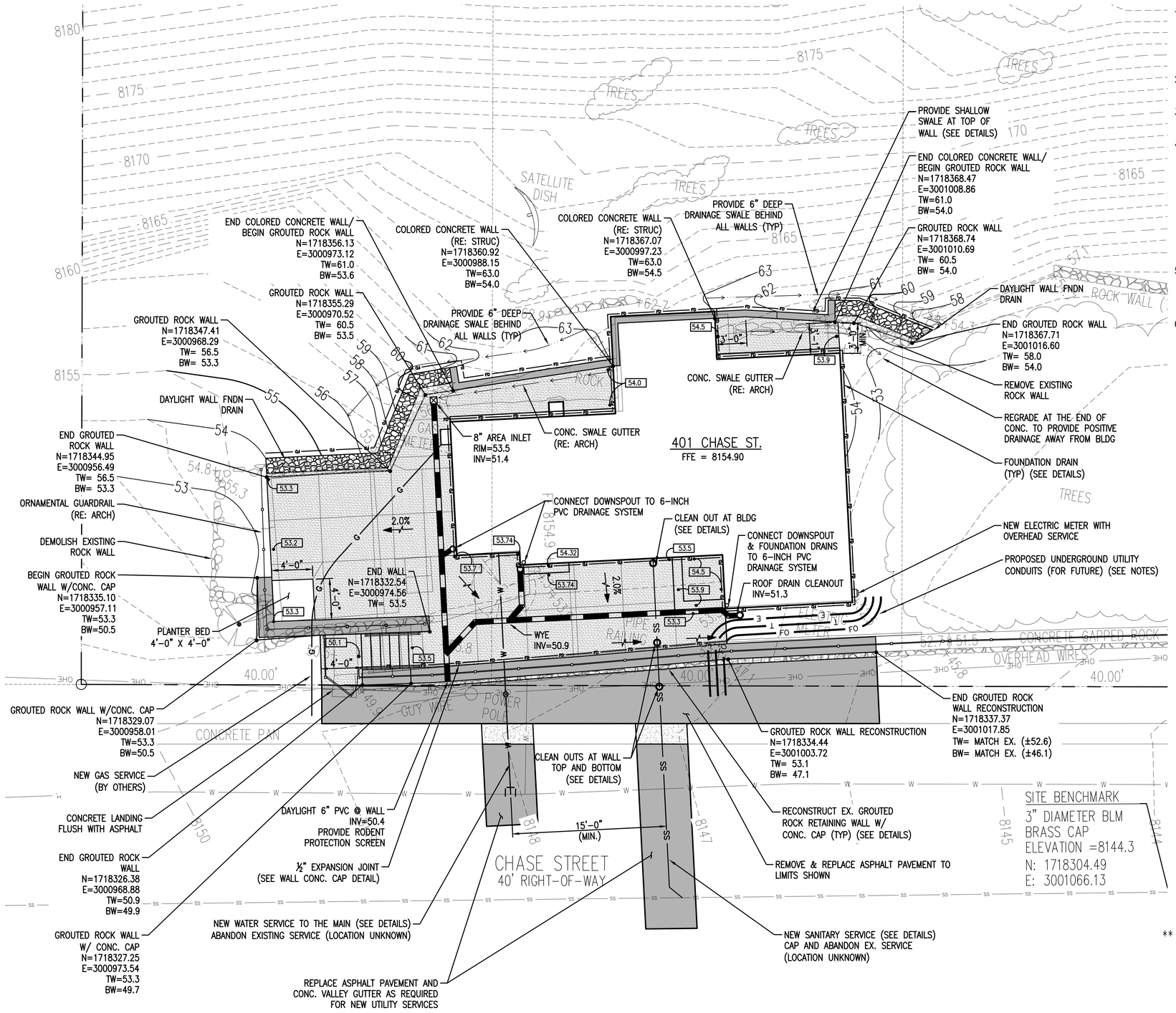

NOTES

1. CONTRACTOR MUST INCLUDE IN THEIR PROPOSAL ANY NECESSARY ROCK EXCAVATION ASSOCIATED WITH FOUNDATIONS, CRAWL SPACE, RETAINING WALLS, AND PIPE INSTALLATION & SITE WORK. THE CONTRACTOR SHALL BECOME FAMILIAR WITH THE GEOTECHNICAL REPORT PROVIDED BY THE CITY/OWNER. ROCK EXCAVATION IS DEFINED AS ANY WORK THAT A BACKHOE CANNOT DIG AND A HYDRAULIC HAMMER IS REQUIRED TO BE BROUGHT TO THE SITE TO BREAK ROCK. SEE SHEET C100 FOR FURTHER INFORMATION.
2. EXISTING BEDROCK TO BE EXCAVATED FOR GROUTED ROCK RETAINING WALLS SHALL BE DONE IN A MANNER IN WHICH THE BEDROCK REMAINS COMPETENT AND SUITABLE FOR STRUCTURAL WALL BEARING.
3. 6-INCH PVC ROOF DRAINAGE SYSTEM SHALL HAVE 12 INCHES OF COVER (MIN.) IN ALL UNPAVED AREAS. WHERE DRAIN IS BELOW CONC. OR ASPHALT, 8 INCHES OF COVER TO TOP OF CONC. IS ACCEPTABLE.
4. ALL DISTURBED, UNPAVED AREAS SHALL RECEIVE 4 INCHES OF TOPSOIL, SEED & MULCH. ON SLOPES 3:1 OR GREATER, AN APPROVED STRAW/COCONUT EROSION CONTROL MAT SHALL BE INSTALLED IN LIEU OF MULCH. EROSION CONTROL MAT SHALL BE INCLUDED IN THE COST OF THE WORK AND WILL NOT BE PAID FOR SEPARATELY. MULCH SHALL CONSIST OF WEED FREE FIELD OR MARSH HAY OR STRAW OF OATS, BARLEY, WHEAT, RYE OR TRITICALE, AND APPROVED BY THE CITY OF BLACK HAWK PRIOR TO PLACEMENT (SUBMIT FOR APPROVAL). SOIL RETENTION BLANKET SHALL BE A MACHINE PRODUCED MAT CONSISTING OF 70% AGRICULTURAL STRAW (0.35 LB/SY) & 30% COCONUT FIBER (0.15 LB/SY). THE BLANKET SHALL BE COVERED W/ POLYPROPYLENE NETTING HAVING AN APPROXIMATE $\frac{5}{8}$ IN. x $\frac{5}{8}$ IN. MESH ON THE TOP AND BOTTOM, AND BE SEWN TOGETHER WITH COTTON, BIODEGRADABLE OR PHOTODEGRADABLE THREAD. SOIL RETENTION BLANKET SHALL BE SECURED W/ PINS AND STAPLES (8" MIN.) INTO THE TOPSOIL AFTER SEEDING.
5. THE CITY WILL BE RESPONSIBLE FOR XCEL ENERGY COSTS ASSOCIATED WITH POWER & GAS SERVICE RELOCATIONS AND INSTALLATION OF FUTURE SERVICE CONDUIT. THE CONTRACTOR IS RESPONSIBLE FOR CONTACTING XCEL AND COORDINATING ALL UTILITY WORK. THE CONTRACTOR IS RESPONSIBLE FOR TEMPORARY POWER SERVICE NEEDS DURING CONSTRUCTION. REFER TO THE PAY ITEMS FOR FURTHER INFORMATION.
6. EXISTING CABLE, & TELEPHONE SERVICES SHALL BE RE ROUTED FROM THE EXISTING CONNECTION ON THE BUILDING TO THE LOCATIONS SHOWN ON THE PLANS (RE: ELEC). 2-INCH PVC PIPE CONDUITS SHALL BE INSTALLED FOR FUTURE UNDERGROUND UTILITIES BENEATH THE RECONSTRUCTED WALL WHERE SHOWN. CONDUIT SHALL BE INSTALLED MINIMUM OF 30 INCHES BELOW FINISHED GRADE TO A MINIMUM OF 3 LF IN FRONT OF THE WALL ALONG CHASE STREET AND CAPPED. INCLUDE WITH A BOARD OR MARKER TO IDENTIFY THE LOCATION OF THE CONDUIT AT CHASE STREET AND STUB UP AND CAP THE CONDUIT AT THE SIDE OF THE HOUSE. PROVIDE PULL STRING WITHIN CONDUITS FOR FUTURE INSTALLATION OF THE SERVICES. THE CONTRACTOR SHALL COORDINATE WITH THE SERVICE PROVIDERS FOR APPROPRIATE CONDUIT SIZES, MATERIALS, AND LOCATIONS. TIME AND MATERIALS REQUIRED FOR COORDINATION SHALL BE INCLUDED IN THE COST OF THE WORK AND WILL NOT BE PAID FOR SEPARATELY. CONTACT BARRY KISSELMAN WITH USA COMMUNICATIONS FOR TELEPHONE SERVICE COORDINATION AT (303) 253-5106, AND DAN LEWIS AT CENTURY LINK FOR CABLE SERVICE AT (303) 441-6021 FOR ALL COORDINATION NEEDS.

LEGEND

- W — EXISTING POTABLE WATER
- SS — EXISTING SANITARY SEWER
- EXISTING PROPERTY BOUNDARY
- X — EXISTING FENCES
- PROPOSED 6" PVC DRAIN PIPE W/ INLET
- 53.2 — PROPOSED SPOT ELEVATION
- DIRECTION OF OVERLAND FLOW
- FLOW LINE
- G — PROPOSED GAS SERVICE
- E — PROPOSED UNDERGROUND UTILITY CONDUIT
- T — PROPOSED UNDERGROUND UTILITY CONDUIT
- FO — PROPOSED UNDERGROUND UTILITY CONDUIT
- SS — PROPOSED SANITARY SEWER SERVICE W/ CLEANOUT
- W — PROPOSED WATER SERVICE
- FD — PROPOSED 4" FOUNDATION DRAIN
- EXISTING STONE WALL
- PROPOSED CONCRETE RETAINING WALL
- PROPOSED GROUTED ROCK WALL W/ CONC. CAP (REPAIR OR NEW)
- PROPOSED GROUTED ROCK WALL (REPAIR OR NEW)

NO.	DATE	REVISION
5.	11/24/14	CONSTRUCTION DOCUMENT SUBMISSION
4.	10/20/14	DESIGN DEVELOPMENT SUBMISSION
3.	09/11/14	SCHEMATIC DESIGN SUBMISSION
2.	08/13/14	CONCEPT FLOOR PLANS
1.	08/08/14	AS-BUILT DRAWINGS

PEH ARCHITECTS
1319 Spruce Street Suite 207
Boulder, CO 80302
303-442-0408, fax: 303-447-1905
e-mail: peheinz@peharchitects.com

401 CHASE STREET REHABILITATION

401 Chase Street, Black Hawk, CO 80422

Loris and Associates, Inc.
818 W. South Boulder Rd. #200
Louisville, Colorado 80027
303.444.2079

SHEET TITLE
GRADING, DRAINAGE, & UTILITY PLAN

PROJECT: 2014.29
DATE: 07/31/14
DRAWN BY: KFD
CHECKED BY: PJL

SHEET NUMBER
C200

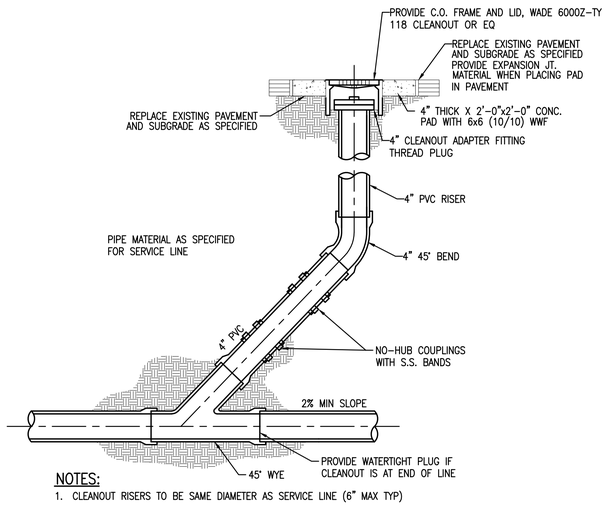

NOTES:

1. CLEANOUT RISERS TO BE SAME DIAMETER AS SERVICE LINE (6" MAX TYP)
2. CLEANOUTS LID SHALL BE FLUSH WITH FINISHED GRADE

1 C300 SANITARY CLEANOUT DETAIL
NTS

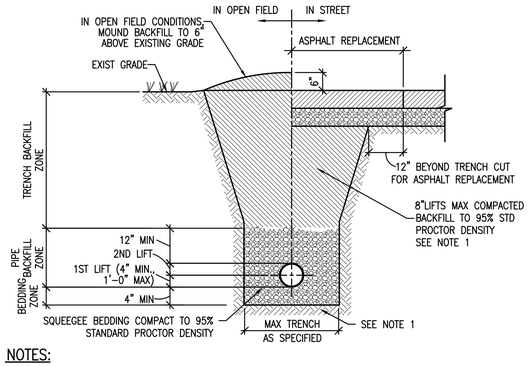

NOTES:

1. COMPACTED BACKFILL TO 90% STD PROCTOR DENSITY IN NON-DRIVING SURFACES AND 95% UNDER PAVEMENT (MIN) WHEN NOT SPECIFIED IN PAVEMENT SECTION
2. SHOULD THE TRENCH BE EXCAVATED WIDER THAN ALLOWED, A CONCRETE CRADLE SHALL BE PLACED WITH 2500psi CONCRETE FROM TRENCH BOTTOM TO PIPE SPRINGLINE
3. TRENCH TO BE BRACED OR SHEETED AS NECESSARY FOR THE SAFETY OF THE WORKERS AND THE PROTECTION OF OTHER UTILITIES IN ACCORDANCE WITH LOCAL, STATE, FEDERAL AND OSHA SAFETY REGULATIONS
4. IF UNSTABLE MATERIALS ARE FOUND IN TRENCH BOTTOM, OVER EXCAVATE 12" BELOW STD EMBEDMENT AND FILL WITH 3/4" CRUSHED ROCK, COMPACTED TO 95%

2 C300 TYPICAL SANITARY SEWER TRENCH DETAIL
NTS

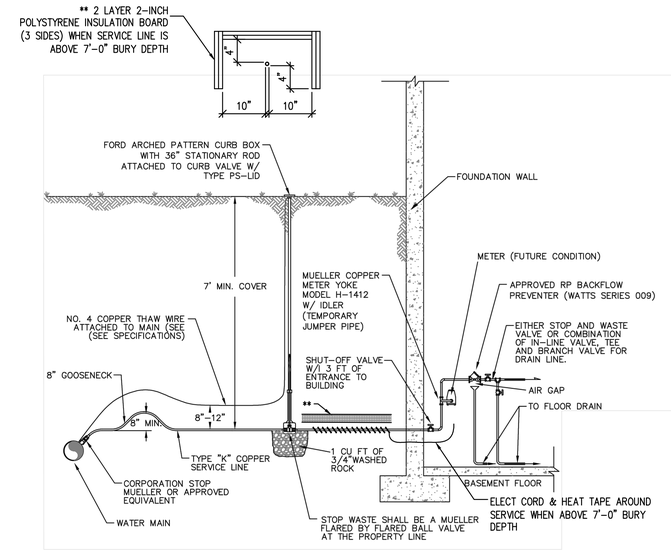

3 C300 TYPICAL WATER SERVICE LINE (3/4" TO 1")
NTS

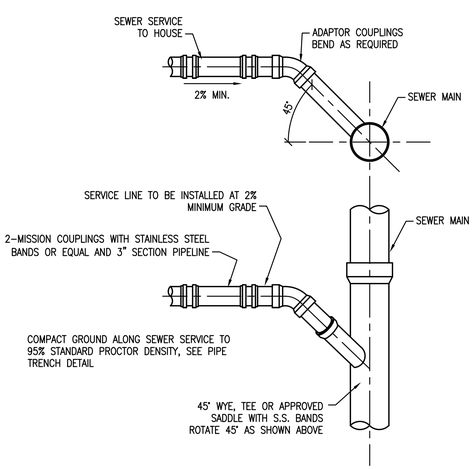

4 C300 SEWER SERVICE CONNECTION DETAIL
NTS

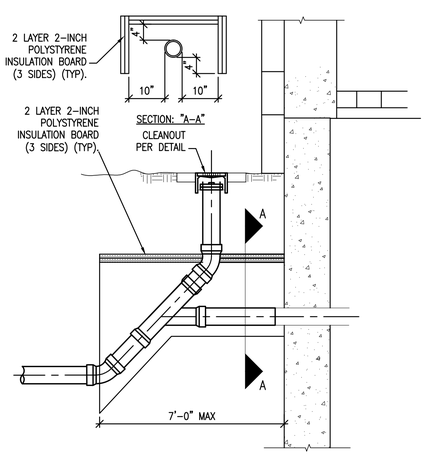

5 C300 SEWER SERVICE AT HOUSE CONNECTION
NTS

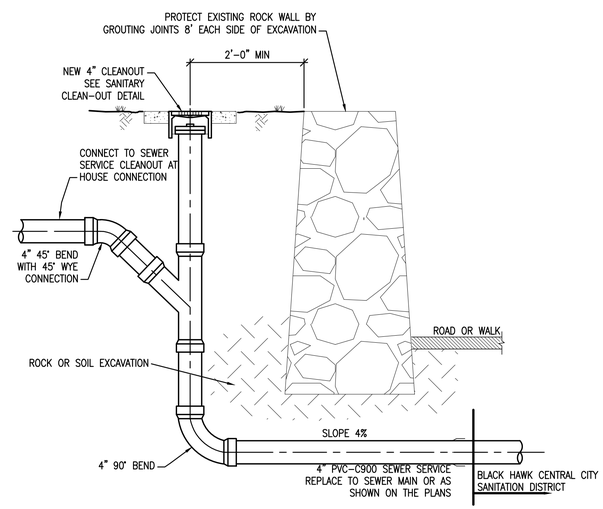

6 C300 SEWER SERVICE BEHIND WALL
NTS

NO.	DATE	REVISION
5.	11/24/14	CONSTRUCTION DOCUMENT SUBMISSION
4.	10/20/14	DESIGN DEVELOPMENT SUBMISSION
3.	09/11/14	SCHEMATIC DESIGN SUBMISSION
2.	08/13/14	CONCEPT FLOOR PLANS
1.	08/08/14	AS-BUILT DRAWINGS

PEH ARCHITECTS
1319 Spruce Street Suite 207
Boulder, CO 80302
303-442-0408, fax: 303-447-1905
e-mail: peheinz@peharchitects.com

401 CHASE STREET REHABILITATION

401 Chase Street, Black Hawk, CO 80422

Loris and Associates, Inc.
818 W. South Boulder Rd. #200
Louisville, Colorado 80027
303.444.2079

SHEET TITLE
SITE DETAILS

PROJECT: 2014.29
DATE: 07/31/14
DRAWN BY: KFD
CHECKED BY: PJL

SHEET NUMBER
C300

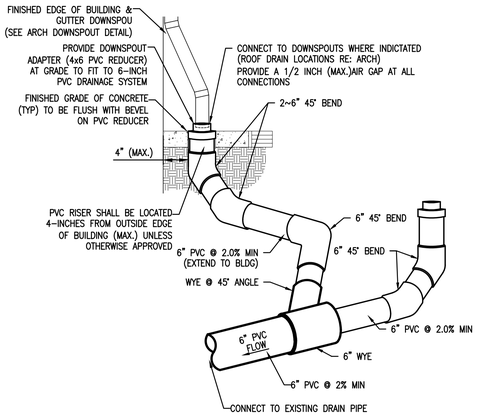

NOTES:

1. ALL PVC PIPES TO BE SDR 35 PVC
2. NO MORE THAN 3~45° BENDS MAY BE USED FOR ROOF DRAIN CONNECTIONS
3. CONFORM TO SEWER BEDDING DETAIL (12" MIN COVER)
4. PVC ROOF DRAIN CAP/CONNECTION TO DOWNSPOUT SHALL BE LOCATED AT THE FINISHED GRADE OF CONCRETE (OR OTHERWISE). 6-INCH PVC SHALL NOT BE EXPOSED ABOVE FINISHED GRADE. PAINT ROOF DRAIN CONNECTION TO MATCH BUILDING COLOR.
5. THE CONTRACTOR SHALL SUBMIT FOR REVIEW AND APPROVAL SHOP DRAWINGS FOR ALL ROOF DRAIN CONNECTION MATERIALS PRIOR TO INSTALLATION.

1 / C301 ROOF DRAIN CONNECTION DETAIL
NTS

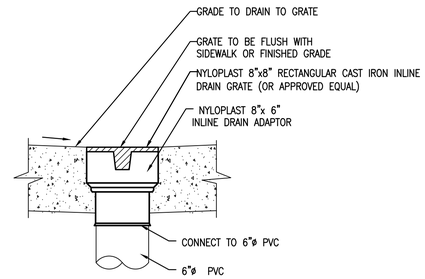

2 / C301 AREA DRAIN AT GRADE GRATE DETAIL
NTS

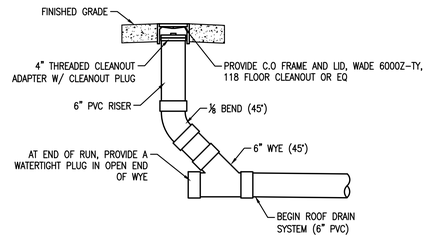

NOTE:
COST OF CLEANOUT SHALL BE INCLUDED IN THE COST OF THE 6" ROOF DRAINAGE SYSTEM.

3 / C301 ROOFDRAIN CLEANOUT DETAIL
NTS

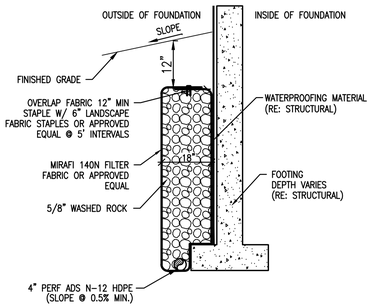

NOTE: THE CONTRACTOR SHOULD EXPECT THAT ROCK EXCAVATION IS REQUIRED FOR INSTALLATION OF FOUNDATION DRAINS. ANY ROCK EXCAVATION REQUIRED FOR FOUNDATION DRAIN INSTALLATION WILL NOT BE PAID FOR SEPARATELY, BUT SHALL BE INCLUDED IN THE COST OF THE WORK.

4 / C301 FOUNDATION DRAIN DETAIL
NTS

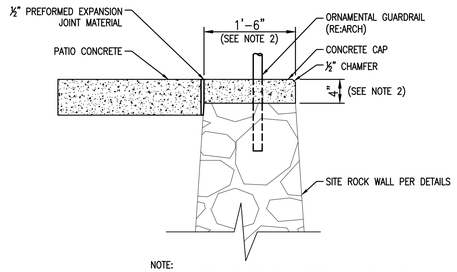

NOTE:
1. SEE PLANS FOR LOCATION OF CONCRETE CAP ON WALLS
2. CONCRETE CAP THICKNESS & WIDTH SHALL MATCH THE EXISTING CONCRETE WALL CAP

8 / C301 SITE ROCK WALL CONCRETE CAP DETAIL
NTS

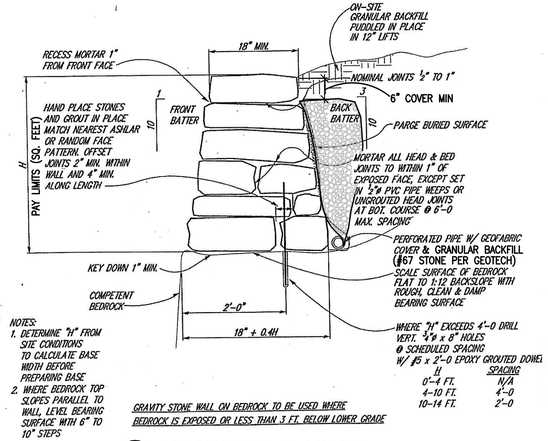

NOTES:
1. DETERMINE "H" FROM SITE CONDITIONS TO CALCULATE BASE WIDTH BEFORE PREPARING BASE
2. WHERE BEDROCK TOP SLOPES PARALLEL TO WALL, LEVEL BEARING SURFACE WITH 6" TO 10" STEPS

H	SPACING
0'-4 FT.	N/A
4-10 FT.	4'-0
10-14 FT.	2'-0

GRAVITY STONE WALL ON BEDROCK TO BE USED WHERE BEDROCK IS EXPOSED OR LESS THAN 3 FT. BELOW LOWER GRADE

5 / C301 SITE ROCK WALL ON BEDROCK
NTS

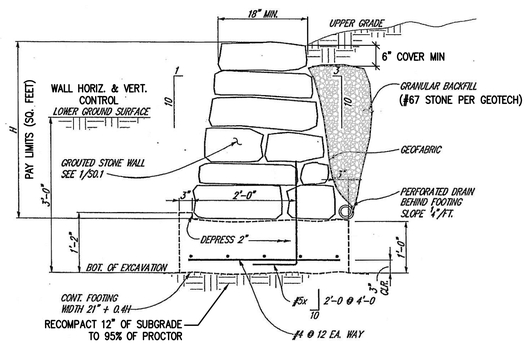

NOTE: CONC. FOOTING TO BE INCLUDED IN THE COST OF THE WALL

GRAVITY STONE WALL ON FOOTING TO BE USED WHERE EXCAVATION TO 3 FT. BELOW GRADE HAS NOT ENCOUNTERED BEDROCK

6 / C301 SITE ROCK WALL ON BACKFILL
NTS

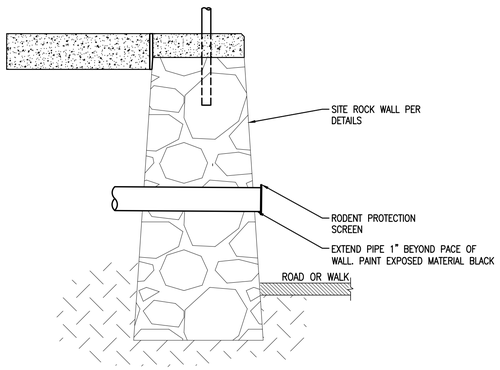

NOTE: RODENT PROTECTION SCREENS SHALL BE "AGRI DRAIN-MILD STEEL PRODUCTS" OR SIMILAR. RODENT PROTECTION SCREEN SHALL BE INCLUDED IN THE COST OF THE WORK.

7 / C301 ROOFDRAIN OUTFALL AT WALL DETAIL
NTS

NOTE:
1. HORIZONTAL CONTROL POINTS SHOWN ON THE PLANS REPRESENT THE FINISHED GRADE LOCATION AT THE BOTTOM OF WALL.
2. TOP OF WALL (TW) AND BOTTOM OF WALL (BW) ELEVATIONS SHOWN ON THE PLANS REPRESENT FINISHED GRADE ELEVATIONS OF THE TOP AND BOTTOM OF THE WALLS.
3. REFER TO THE WALL CONCRETE CAP DETAIL FOR WALLS REQUIRING A CONCRETE CAP WHERE SHOWN ON THE PLANS.

NO.	DATE	REVISION
5.	11/24/14	CONSTRUCTION DOCUMENT SUBMISSION
4.	10/20/14	DESIGN DEVELOPMENT SUBMISSION
3.	09/11/14	SCHEMATIC DESIGN SUBMISSION
2.	08/13/14	CONCEPT FLOOR PLANS
1.	08/08/14	AS-BUILT DRAWINGS

PEH ARCHITECTS
1319 Spruce Street Suite 207
Boulder, CO 80302
303-442-0408, fax: 303-447-1905
e-mail: peheinz@peharchitects.com

401 CHASE STREET REHABILITATION

401 Chase Street, Black Hawk, CO 80422

Loris and Associates, Inc.
819 W. South Boulder Rd. #200
Louisville, Colorado 80027
303.444.2075

SHEET TITLE
SITE DETAILS

PROJECT: 2014.29
DATE: 07/31/14
DRAWN BY: KFD
CHECKED BY: PJL

SHEET NUMBER
C301

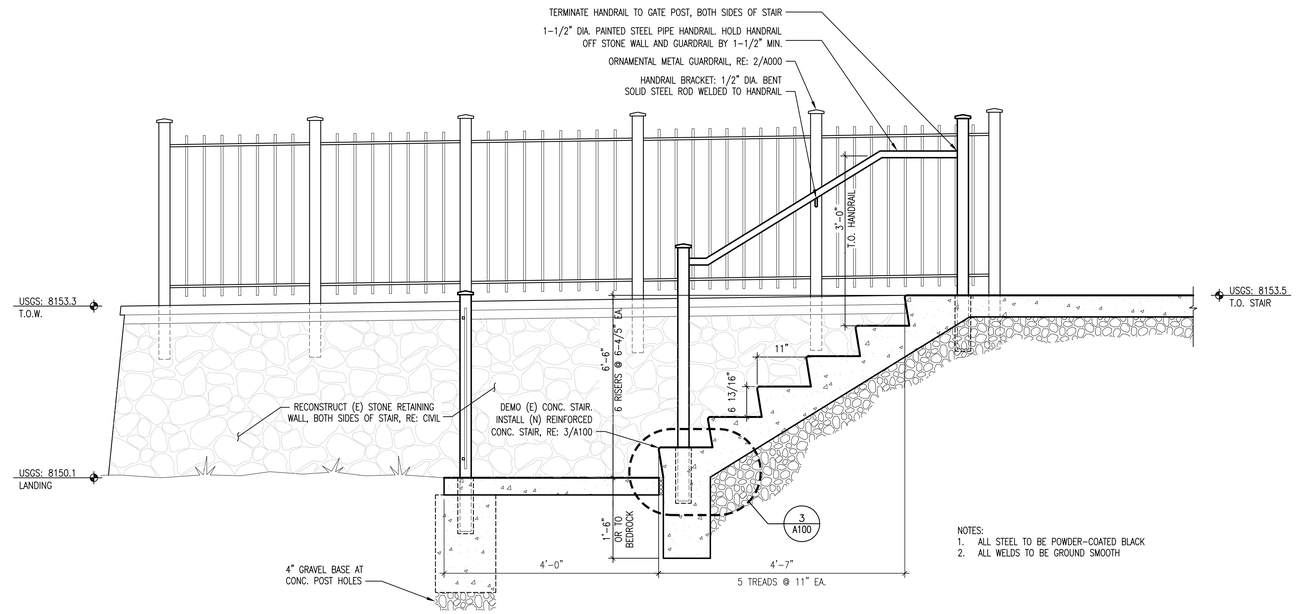

NOTES:
1. ALL STEEL TO BE POWDER-COATED BLACK
2. ALL WELDS TO BE GROUND SMOOTH

2 CONC. STAIR SECTION
3/4" = 1'-0"

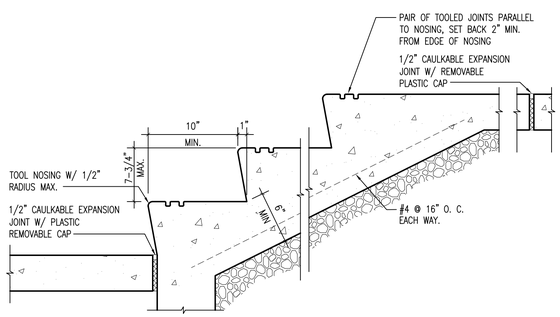

3 CONC. STAIR DETAIL
1-1/2" = 1'-0"

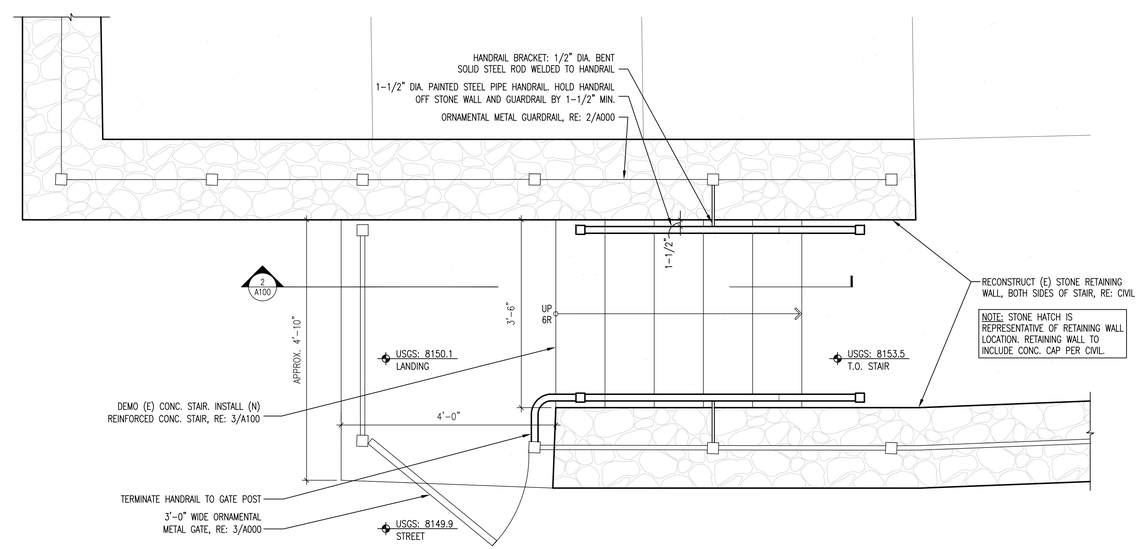

1 CONC. STAIR PLAN
3/4" = 1'-0"

0 1 2

NO.	DATE	REVISION
5.	11/24/14	CONSTRUCTION DOCUMENT SUBMISSION
4.	10/20/14	DESIGN DEVELOPMENT SUBMISSION
3.	09/11/14	SCHEMATIC DESIGN SUBMISSION
2.	08/13/14	CONCEPT FLOOR PLANS
1.	08/08/14	AS-BUILT DRAWINGS

PEH ARCHITECTS
1319 Spruce Street Suite 207
Boulder, CO 80302
303-442-0408, fax: 303-447-1905
e-mail: peheinz@peharchitects.com

401 CHASE STREET REHABILITATION

401 Chase Street, Black Hawk, CO 80422

SHEET TITLE
SITE DETAILS

PROJECT: 2014.29
DATE: 07/31/14
DRAWN BY: TCF
CHECKED BY: PEH

SHEET NUMBER
A100

DEMOLITION CONTRACTOR

G.C. IS ENCOURAGED TO CAREFULLY REMOVE SERVICEABLE PLUMBING AND ELECTRICAL FIXTURES, DOORS, HARDWARE AND OTHER REUSABLE ITEMS, AND PROVIDE TO SALVAGE RESALE CENTERS. SOME CENTERS WILL REMOVE FREE OF CHARGE.

RESOURCE, BOULDER, CO
303-419-5418

HABITAT FOR HUMANITY
303-454-8965

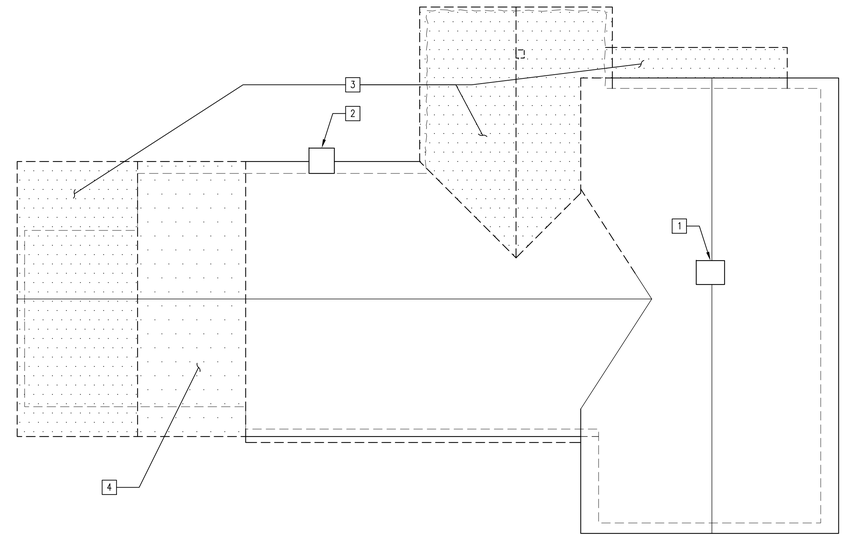

2 DEMO ROOF PLAN
1/4" = 1'-0"

DEMO ROOF PLAN- GENERAL NOTES:

1. DEMO GUTTERS AND DOWNSPOUTS.
2. DEMO ROOF PENETRATIONS FOR PLUMBING AND MECHANICAL.
3. DEMO ROOFING MATERIAL DOWN TO SHEATHING.

DEMO ROOF PLAN- KEY NOTES:

1 (E) BRICK CHIMNEY TO REMAIN, REPAIR PER A201 & STRUCTURAL

2 CAREFULLY DECONSTRUCT BRICK CHIMNEY SALVAGING ALL SOUND BRICK FOR RECONSTRUCTION. RECONSTRUCT PER STRUCTURAL

3 HATCH AREA INDICATES AREA TO BE DEMOLISHED (INCLUDING ROOF FRAMING)

4 KEEP FRAMING FOR HISTORIC HIP ROOF

DEMO FLOOR PLAN- GENERAL NOTES:

1. DARK DASH LINES INDICATE AREAS OF DEMOLITION.
2. DEMO ALL CABINETRY, COUNTERTOPS, BUILT-INS, SHELVING AND MILLWORK.
3. DEMO ALL TRIM, WALL AND CEILING FINISHES TO EXPOSE WALL/CEILING/ROOF FRAMING (INCLUDES DEMO OF INT. WOOD PLANK SHEATHING).
4. DEMO ALL FLOOR, WALL, CEILING AND ROOF INSULATION.
5. DEMO ALL FLOOR FINISHES AND SUBFLOOR TO EXPOSE FLOOR FRAMING AND CRAWL SPACE.
6. DEMO ALL ELECTRICAL, CABLE, AND PHONE WIRING AND FIXTURES. COORDINATE SHUT-OFF OF ELECTRICAL SERVICE PRIOR TO DEMO.
7. DEMO WATER HEATER.
8. DEMO ALL PLUMBING PIPING AND FIXTURES FOR WATER, SEWER, HEATING AND GAS. COORDINATE SHUT-OFF OF WATER AND GAS SERVICE PRIOR TO DEMO. CAP ALL PLUMBING SERVICE LINES WITHIN 5'-0" OF ENTRANCE INTO STRUCTURE. LABEL ALL CAPPED SERVICE LINES.
9. DEMO EXISTING WINDOWS, SASHES, FRAMES, AND SILLS.
10. DEMO EXTERIOR SIDING, TRIM, FASCIA, AND SOFFITS U.N.O.
11. DEMO ALL INTERIOR AND EXTERIOR DOORS, FRAMES, AND THRESHOLDS.
12. DEMO FURNACE, DUCTWORK, AND ASSOCIATED HEATING SYSTEM.
13. DEMO FOUNDATION.

DEMO FLOOR PLAN- KEY NOTES:

1 DEMO TO UNDERSIDE OF ROOF FRAMING PER STRUCTURAL

2 CAREFULLY DECONSTRUCT BRICK CHIMNEY SALVAGING ALL SOUND BRICK FOR RECONSTRUCTION. RECONSTRUCT PER STRUCTURAL

3 SALVAGE SOUND BRICK FOR REUSE AT CHIMNEY

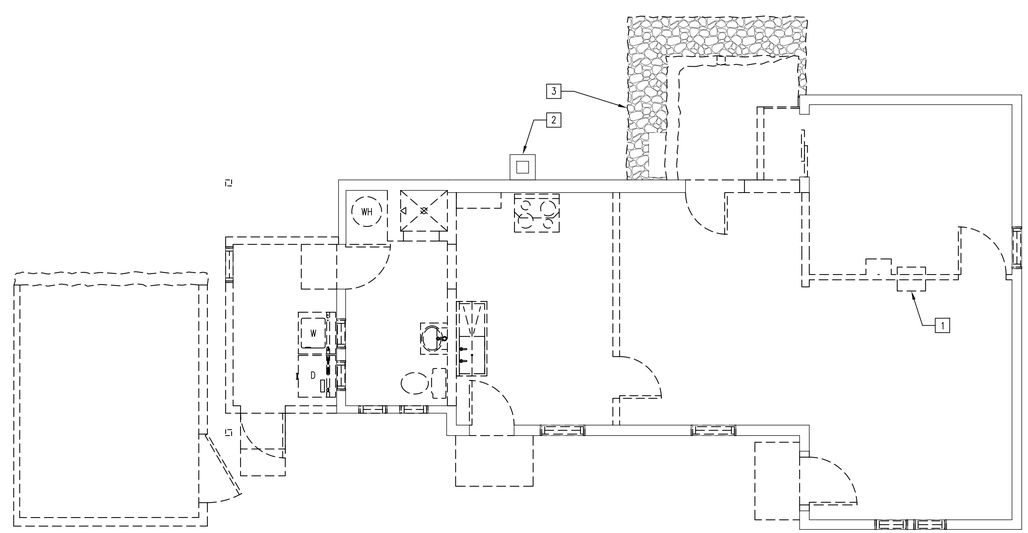

(E) FRAME WALL

BUILDING ELEMENT TO BE DEMOLISHED/REMOVED

N

1 DEMO FIRST FLOOR PLAN
1/4" = 1'-0"

0 2 4

NO.	DATE	REVISION
5.	11/24/14	CONSTRUCTION DOCUMENT SUBMISSION
4.	10/20/14	DESIGN DEVELOPMENT SUBMISSION
3.	09/11/14	SCHEMATIC DESIGN SUBMISSION
2.	08/13/14	CONCEPT FLOOR PLANS
1.	08/08/14	AS-BUILT DRAWINGS

PEH ARCHITECTS
1319 Spruce Street Suite 207
Boulder, CO 80302
303-442-0408, fax: 303-447-1905
e-mail: peheinz@peharchitects.com

401 CHASE STREET REHABILITATION

401 Chase Street, Black Hawk, CO 80422

SHEET TITLE

DEMO FLOOR PLAN AND ROOF PLAN

PROJECT: 2014.29
DATE: 07/31/14
DRAWN BY: TCF
CHECKED BY: PEH

SHEET NUMBER
A200

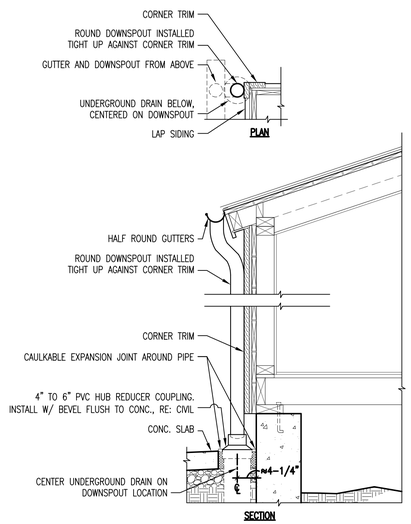

4 DOWNSPOUT TO UNDERGROUND DRAIN DETAIL
3/4" = 1'-0"

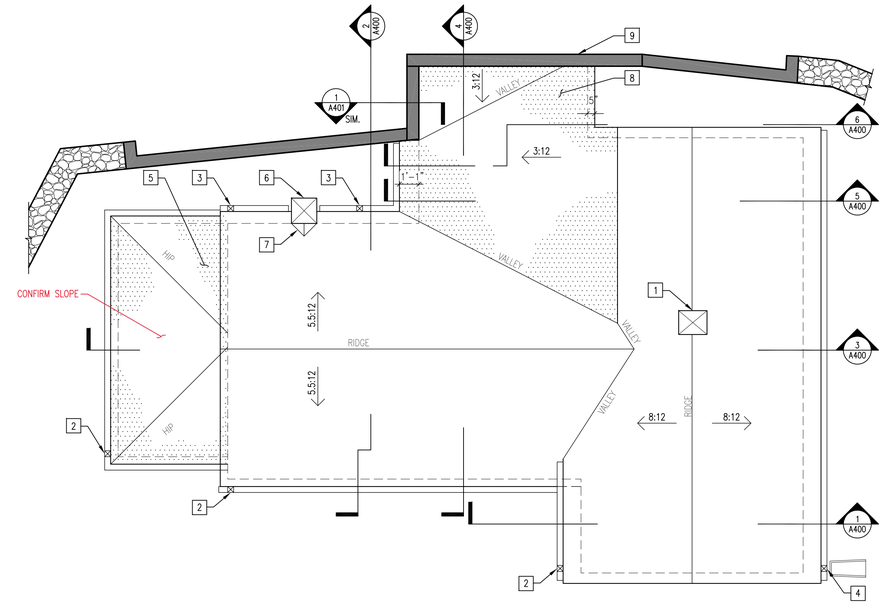

2 ROOF PLAN
1/4" = 1'-0"

ROOF PLAN- GENERAL NOTES:

1. NEW GUTTERS AND DOWNSPOUTS PER PLAN.
2. SISTER/REPLACE DAMAGED ROOF RAFTERS.
3. NEW ASPHALT SHINGLES OVER ROOFING PAPER W/ ICE AND WATER SHIELD 3'-0" UP FROM EAVE, U.N.O.
4. ROOF VENTILATION NOT REQ'D.

ROOF PLAN- KEY NOTES:

1. RESTORE (E) BRICK CHIMNEY, REPAIR IN PLACE. INSTALL (N) BLACK BREAK METAL CAP, SLOPE TOP FOR DRAINAGE W/ 4" VERTICAL OVERHANG EA. SIDE. REINFORCE BASE OF BRICK CHIMNEY ABOVE CEILING FRAMING, RE: STRUCTURAL
2. DOWNSPOUT TO UNDERGROUND DRAIN, RE: 4/A201 & CIVIL
3. DOWNSPOUT TO SWALE
4. DOWNSPOUT TO SPLASHBLOCK
5. (N) ROOFING AND SISTERED ROOF FRAMING AT HISTORIC HIP ROOF, RE: STRUCTURAL
6. RECONSTRUCT (E) BRICK CHIMNEY W/ SALVAGED BRICK. INSTALL (N) BLACK BREAK METAL CAP, SLOPE TOP FOR DRAINAGE W/ 4" VERTICAL OVERHANG EA. SIDE. INSTALL CONC. FND., RE: STRUCTURAL
7. ROOF CRICKET, PROVIDE FULL COVERAGE OF ICE + WATER SHIELD AT CRICKET
8. NEW ROOFING AND ROOF FRAMING AT REAR OF HOUSE, RE: STRUCTURAL
9. CONC. RETAINING WALL, RE: CIVIL & STRUCTURAL

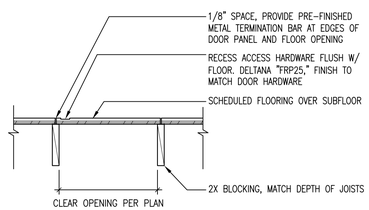

3 CRAWL SPACE ACCESS
3/4" = 1'-0"

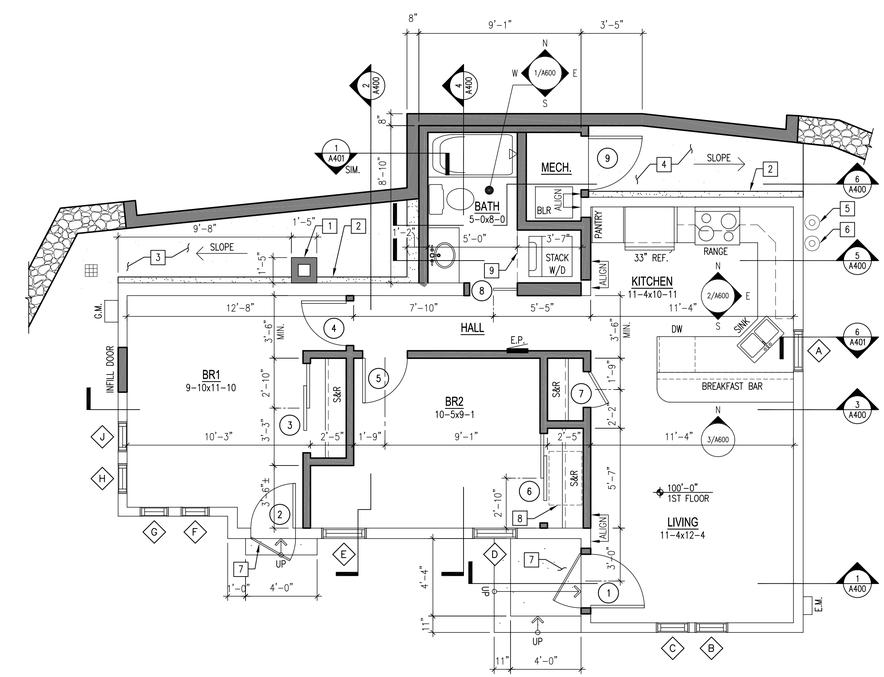

1 FIRST FLOOR PLAN
1/4" = 1'-0"
0 2 4

FLOOR PLAN- GENERAL NOTES:

1. LEVEL FLOOR FRAMING.
2. ALL SHADED WALLS ARE NEW, SEE SYSTEM NOTES ON SHEET A400 FOR CONSTRUCTION.
3. FINISHED FLOOR 100'-0" = USGS 8154.9.

FLOOR PLAN- KEY NOTES:

1. RECONSTRUCT BRICK CHIMNEY, OVER (N) CONC. FND. INSTALL (N) BLACK BREAK METAL CAP, SLOPE TOP FOR DRAINAGE W/ 4" VERTICAL OVERHANG EA. SIDE. INSTALL CONC. FND., RE: STRUCTURAL
2. RAISED CONC. CURB, RE: STRUCTURAL
3. 4" THICK CONC. SWALE, SLOPE 5% MIN. TO 8"X8" CAST IRON AREA DRAIN THAT CONNECTS TO UNDERGROUND DRAINAGE PIPE, RE: CIVIL
4. 4" THICK CONC. SWALE, SLOPE 5% MIN. TO LANDSCAPE, RE: CIVIL
5. RADON EXHAUST, RE: MECHANICAL
6. CRAWL SPACE EXHAUST, RE: MECHANICAL
7. CONC. TREAD, RISER, AND LANDING, SIM. 3/A100
8. 22"X36" CRAWL SPACE ACCESS, RE: 3/A201
9. SOFFIT ABOVE, TO ALIGN W/ (N) MECHANICAL WALL, RE: 1/A600

ROOM FINISH SCHEDULE

ROOM NAME	FLOOR	BASE	WALLS				CEILING		NOTES
			N	E	S	W	MATL	HEIGHT	
LIVING	TILE	WOOD	P1	P1	P1	P2	P0/ GYP. BD.	8'-1" TO 11'-2"	VAULTED CEILING
KITCHEN	TILE	WOOD	P1	P1	P1	P2	P0/ GYP. BD.	8'-1" TO 11'-2"	VAULTED CEILING
MECH.	TILE	WOOD	P5	P5	P5	P5	P0/ GYP. BD.	8'-0" TO 8'-9"	SLOPED CEILING
BATH	TILE	WOOD	P3	P3	P3	P3	P0/ GYP. BD.	6'-7" TO 8'-9"	SLOPED CEILING
HALL	TILE	WOOD	P2	N/A	P2	P2	P0/ GYP. BD.	6'-11" TO 8'-4"	SLOPED CEILING
BEDROOM 1	VINYL PLANK	WOOD	P3	P3	P3	P3	P0/ GYP. BD.	6'-9" TO 9'-0"	VAULTED CEILING
BEDROOM 2	VINYL PLANK	WOOD	P4	P4	P4	P4	P0/ GYP. BD.	6'-9" TO 9'-0"	VAULTED CEILING

ABBREVIATIONS
C. TILE = CERAMIC TILE CONC. = CONCRETE GYP. BD. = GYPSUM WALL BOARD P. TILE = PORCELAIN TILE M. TILE = MARBLE TILE

1. ALL INTERIOR WALLS AND CEILINGS TO BE PAINTED (WALL TILE IS SHOWN ON INTERIOR ELEVATIONS).
2. SEE 5/A600 FOR (N) INTERIOR TRIM.
3. SEE PROJECT MANUAL FOR MATERIAL DEFINITIONS.
4. P0, P1, P2, P3 ETC. SPECIFICATIONS PROVIDED IN PROJECT MANUAL.

NO.	DATE	REVISION
5.	11/24/14	CONSTRUCTION DOCUMENT SUBMISSION
4.	10/20/14	DESIGN DEVELOPMENT SUBMISSION
3.	09/11/14	SCHEMATIC DESIGN SUBMISSION
2.	08/13/14	CONCEPT FLOOR PLANS
1.	08/08/14	AS-BUILT DRAWINGS

PEH ARCHITECTS
1319 Spruce Street Suite 207
Boulder, CO 80302
303-442-0408, fax: 303-447-1905
e-mail: peheinz@peharchitects.com

401 CHASE STREET REHABILITATION

401 Chase Street, Black Hawk, CO 80422

SHEET TITLE
FLOOR PLAN, ROOF PLAN, AND SCHEDULES

PROJECT: 2014.29
DATE: 07/31/14
DRAWN BY: TCF
CHECKED BY: PEH

SHEET NUMBER
A201

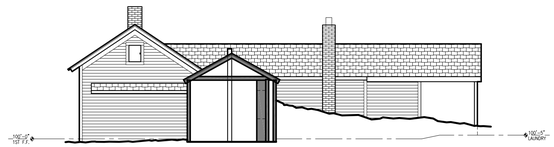

AB NORTH ELEVATION
1/8" = 1'-0"

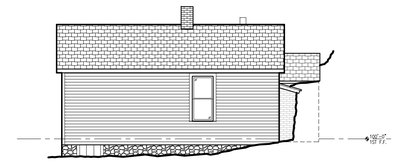

AB EAST ELEVATION
1/8" = 1'-0"

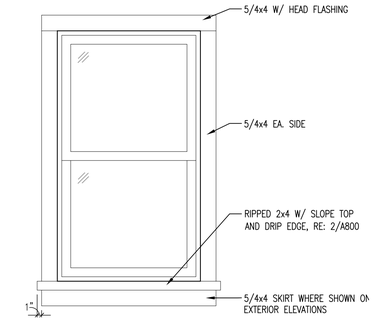

5 TYPICAL WINDOW TRIM
3/4" = 1'-0"

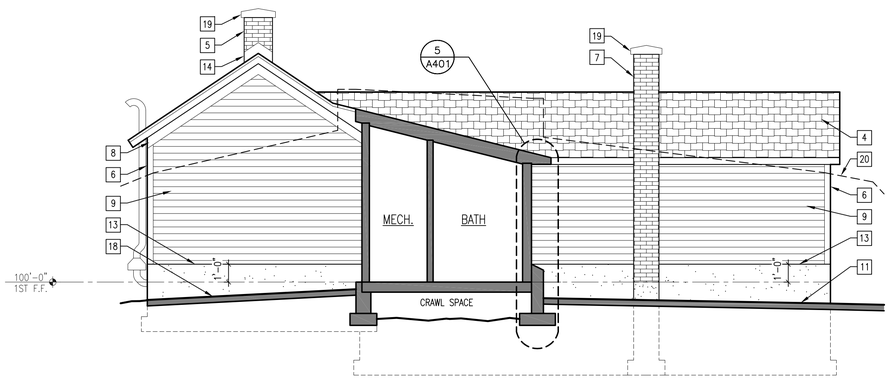

4 NORTH ELEVATION
1/4" = 1'-0"

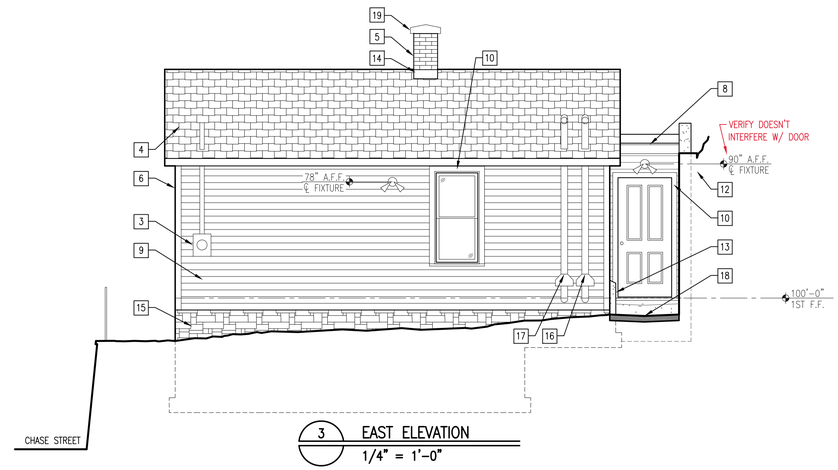

3 EAST ELEVATION
1/4" = 1'-0"

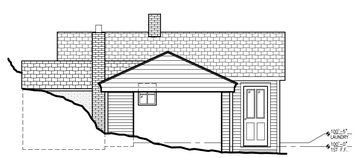

AB WEST ELEVATION
1/8" = 1'-0"

AB SOUTH ELEVATION
1/8" = 1'-0"

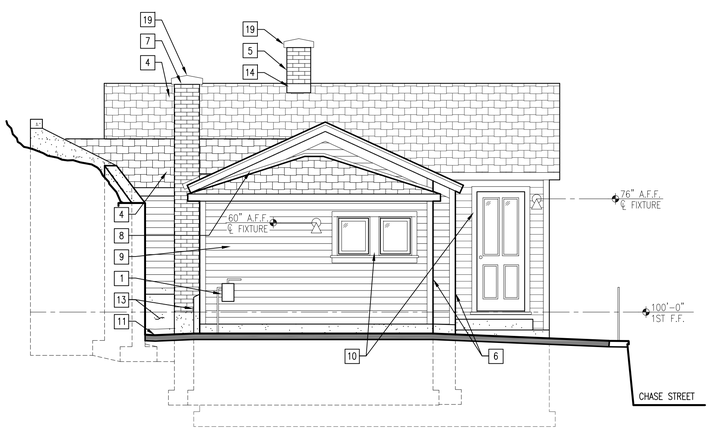

2 WEST ELEVATION
1/4" = 1'-0"

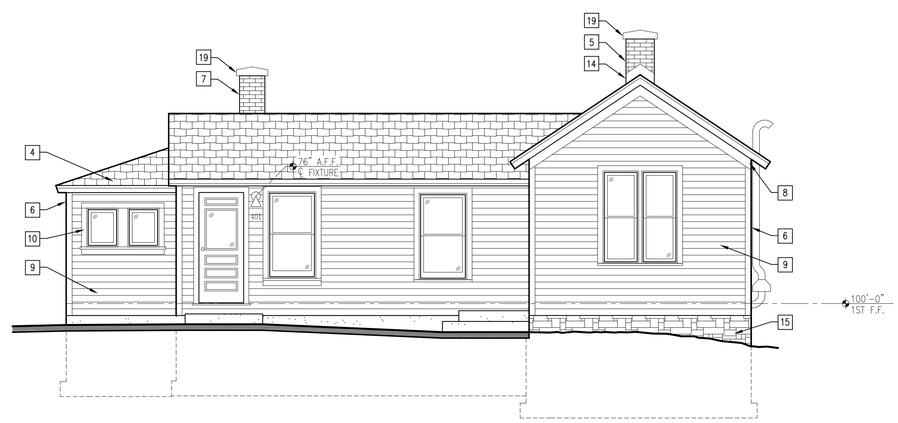

1 SOUTH ELEVATION
1/4" = 1'-0"

0 2 4

ELEVATION- GENERAL NOTES:

1. FINISHED FLOOR 100'-0" = 8154.9 USGS.
2. ALL NOTES TYPICAL ALL ELEVATIONS, U.N.O.
3. GUTTERS AND DOWNSPOUTS ARE NOT SHOWN FOR CLARITY. TO BE COORDINATED W/ ROOF PLAN AND REQUIRED CONDITIONS.
4. PAINT ALL EXPOSED ROOF PENETRATION PIPES AND VENTS TO MATCH ROOF COLOR.
5. REMOVE ALL EXPOSED PHONE/CABLE FROM EXTERIOR. RE-ROUTE WITHIN FRAMING.
6. REMOVE ALL EXPOSED GAS AND ELECTRICAL CONDUIT FROM EXTERIOR, RE-ROUTE WITHIN FRAMING.
7. PAINT ALL EXPOSED GAS PIPE AND ELECTRICAL CONDUIT TO MATCH ADJACENT SURFACE.
8. INSTALL 24 GA. G.I. AT ALL ROOF/WALL INTERSECTIONS. 2" MIN. REVEAL U.N.O.
2. INSTALL 24 GA. G.I. OVER ALL HORIZONTAL TRIM.
3. INSTALL 6"X6"X3/4" SOLID TRIM BD. BEHIND LIGHT FIXTURES FOR FLUSH MOUNT.
4. REPLACE ALL WOOD SIDING, TRIM, FASCIA, AND SOFFITS
5. ORNAMENTAL METAL GATES AND GUARDRAILS ARE NOT SHOWN FOR DRAWING CLARITY.

ELEVATION- KEY NOTES:

1. G.M.
2. (N) GAS STUB FOR BBQ GRILL, RE: PLUMBING
3. RELOCATE E.M. – VERIFY LOCATION W/ XCEL
4. (N) ASPHALT SHINGLES
5. RESTORE (E) BRICK CHIMNEY, REPAIR IN PLACE, REINFORCE BASE OF BRICK CHIMNEY ABOVE CEILING FRAME, RE: STRUCTURAL
6. 5/4x4 CORNER BOARD
7. RECONSTRUCT (E) BRICK CHIMNEY W/ SALVAGED BRICK. INSTALL CONC. FND., RE: STRUCTURAL
8. 5/4x6 FRIEZE BOARD
9. HORIZONTAL LAP SIDING W/ 4" REVEAL
10. WINDOW AND DOOR TRIM TYP., RE: 5/A300
11. INSTALL (N) 4" THICK CONC. SWALE SLOPED 5% MIN. TO 8"X8" CAST IRON AREA DRAIN THAT CONNECTS TO UNDERGROUND DRAINAGE PIPE, RE: CIVIL
12. REPLACE STONE RETAINING WALL W/ (N) CONC. RETAINING WALL, RE: CIVIL & STRUCTURAL
13. RAISED CONC. CURB, 1'-0" A.F.F. HT., RE: STRUCTURAL
14. INSTALL FLASHING/COUNTER FLASHING AT CHIMNEY
15. (N) STONE VENEER AT FND., RE: STRUCTURAL
16. RADON EXHAUST, RE: MECHANICAL
17. CRAWL SPACE EXHAUST, RE: MECHANICAL
18. INSTALL (N) 4" THICK CONC. SWALE SLOPED 5% MIN., RE: CIVIL
19. BLACK BREAK METAL CAP. SLOPE TOP FOR DRAINAGE W/ 4" VERTICAL OVERHANG EA. SIDE
20. DASHED LINE INDICATES (N) CONC. RETAINING WALL (BEHIND), RE: 6/A400

CONFIRM EA. LIGHT FIXTURE MOUNT HT. W/ FIXTURES

NO.	DATE	REVISION
5.	11/24/14	CONSTRUCTION DOCUMENT SUBMISSION
4.	10/20/14	DESIGN DEVELOPMENT SUBMISSION
3.	09/11/14	SCHEMATIC DESIGN SUBMISSION
2.	08/13/14	CONCEPT FLOOR PLANS
1.	08/08/14	AS-BUILT DRAWINGS

PEH ARCHITECTS
1319 Spruce Street Suite 207
Boulder, CO 80302
303-442-0408, fax: 303-447-1905
e-mail: peheinz@peharchitects.com

401 CHASE STREET REHABILITATION

401 Chase Street, Black Hawk, CO 80422

SHEET TITLE
EXTERIOR ELEVATIONS

PROJECT: 2014.29
DATE: 07/31/14
DRAWN BY: TCF
CHECKED BY: PEH

SHEET NUMBER
A300

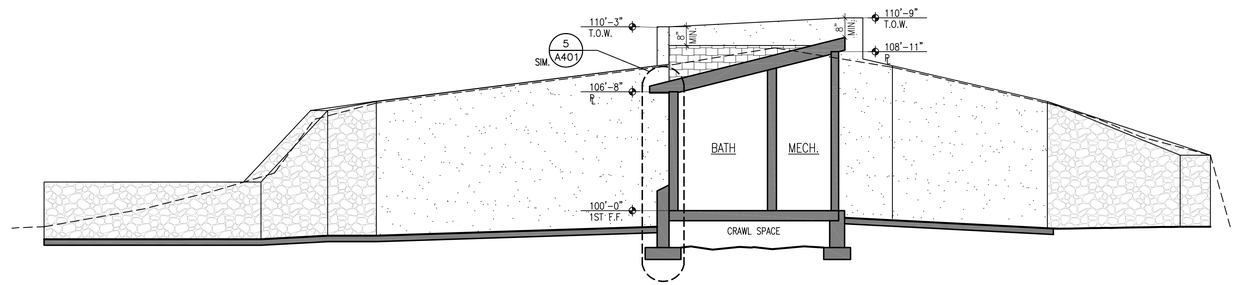

6 BUILDING SECTION
1/4" = 1'-0"

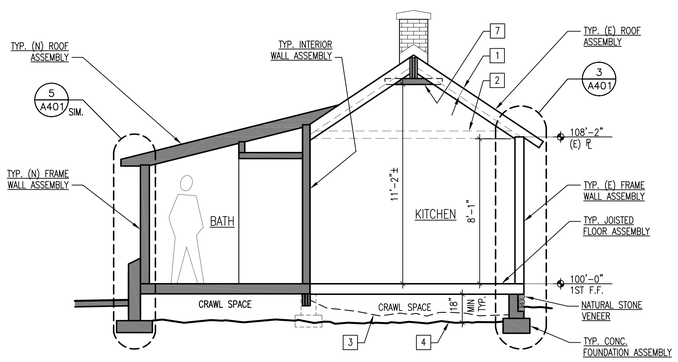

5 BUILDING SECTION
1/4" = 1'-0"

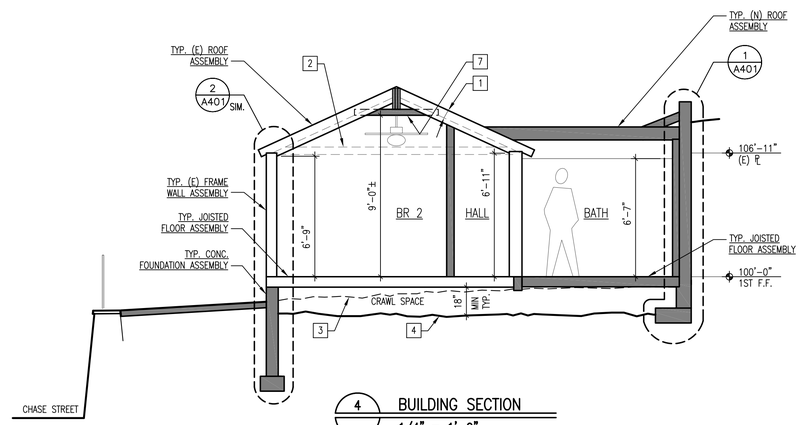

4 BUILDING SECTION
1/4" = 1'-0"

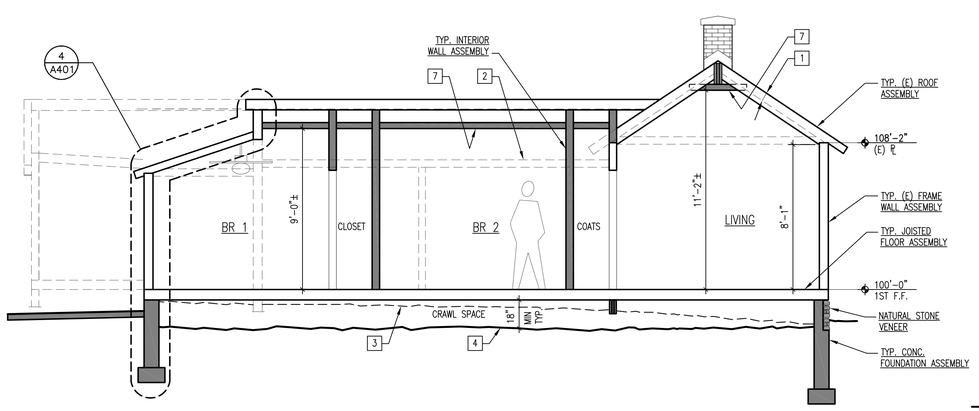

3 BUILDING SECTION
1/4" = 1'-0"

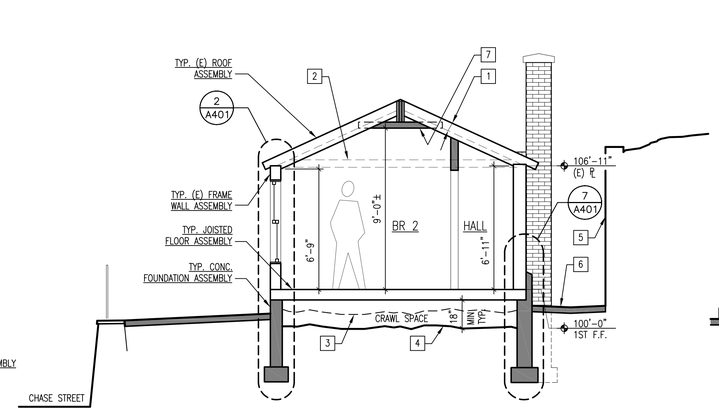

2 BUILDING SECTION
1/4" = 1'-0"

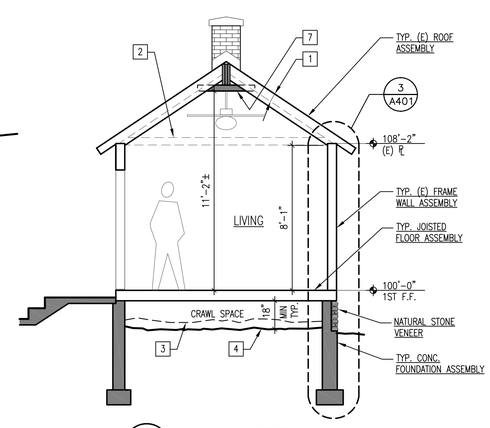

1 BUILDING SECTION
1/4" = 1'-0"

0 2 4

BUILDING SYSTEM NOTES:

TYP. (E) ROOF ASSEMBLY:

ASPHALT SHINGLES OVER ROOFING PAPER OVER (N) ROOF SHEATHING OVER (E) PLANK SHEATHING OVER (E) RAFTERS SISTERED PER STRUCTURAL W/ R-49 DEPTH SPRAY FOAM INSULATION OR FILL CAVITY. INSTALL ICE AND WATER SHIELD 3'-0" UP FROM EAVE UNDER ROOFING PAPER, PROVIDE SHINGLE DRIP EDGE.

TYP. (N) ROOF ASSEMBLY:

ASPHALT SHINGLES OVER ROOFING PAPER OVER ROOF SHEATHING OVER SPECIFIED RAFTERS W/ R-49 DEPTH SPRAY FOAM INSULATION. INSTALL ICE AND WATER SHIELD 3'-0" UP FROM EAVE UNDER ROOFING PAPER, PROVIDE SHINGLE DRIP EDGE.

TYP. (E) FRAME WALL ASSEMBLY:

SPECIFIED SIDING OVER BUILDING PAPER OVER 7/16" OSB SHEATHING OVER (E) PLANK SHEATHING (E) STUDS (TO BE SISTERED) W/ SPRAY FOAM INSULATION TO FILL CAVITY (R-24) OVER 1/2" GYP. BD. WHERE NO (E) PLANK SHEATHING IS PRESENT INFILL W/ OSB SHEATHING FOR FLUSH FINISH.

TYP. (N) FRAME WALL ASSEMBLY:

SPECIFIED SIDING OVER BUILDING PAPER OVER 7/16" OSB SHEATHING OVER 2X4 STUDS W/ SPRAY FOAM INSULATION TO R-24 OVER 1/2" GYP. BD. (PROVIDE FURRING AS REQ'D TO ALIGN W/ ADJACENT SURFACES).

TYP. CONC. FOUNDATION ASSEMBLY:

2 COATS ASPHALTIC WATER PROOFING OVER (N) CONC. FND. PER STRUCTURAL OVER R-15 DEPTH SPRAY FOAM INSULATION. FILL ALL JOIST POCKETS W/ R-15 DEPTH SPRAY FOAM INSULATION.

TYP. INTERIOR WALL ASSEMBLY:

2X4 @ 16" O.C. W/ 1/2" GYP. BD. EA. SIDE (PROVIDE FURRING AS NECESSARY TO ALIGN WITH ADJACENT SURFACES).

TYP. JOISTED FLOOR ASSEMBLY:

3/4" T&G OSB OVER (N) OR (E) JOISTS PER STRUCTURAL

TYP. CEILING ASSEMBLY:

(N) JOISTS PER STRUCTURAL OVER 1/2" GYP. BOARD.

NATURAL STONE VENEER:

4"± GROUTED STONE VENEER, TIGHT UNDER FLOOR FRAMING, RE: STRUCTURAL

BUILDING SECTION- KEY NOTES:

1. (E) RAFTERS SISTERED PER STRUCTURAL
2. DEMO (E) CEILING RAFTERS
3. ASSUMED EDGE OF (E) GRADE
4. EXCAVATE TO PROVIDE 18" MIN. CRAWL SPACE DEPTH TO INCLUDE BEDROCK EXCAVATION WHERE ENCOUNTERED. INSTALL CLASS A 15 MIL. POLY VAPOR BARRIER THROUGHOUT (TYP.) AND EXTEND R-13 F.G. BATT INSULATION 24" HORIZ. INTO CRAWL SPACE (IECC 402.2.9). MECHANICALLY CONDITION CRAWL SPACE
5. (N) CONC. RETAINING WALL, RE: STRUCTURAL
6. CONC. DRAINAGE SWALE, RE: CIVIL
7. 2x4 CEILING RAFTERS AT 16" O.C. TIGHT TO BOTTOM OF RIDGE BEAM, RE: STRUCTURAL

NO.	DATE	REVISION
5.	11/24/14	CONSTRUCTION DOCUMENT SUBMISSION
4.	10/20/14	DESIGN DEVELOPMENT SUBMISSION
3.	09/11/14	SCHEMATIC DESIGN SUBMISSION
2.	08/13/14	CONCEPT FLOOR PLANS
1.	08/08/14	AS-BUILT DRAWINGS

PEH ARCHITECTS
1319 Spruce Street Suite 207
Boulder, CO 80302
303-442-0408, fax: 303-447-1905
e-mail: peheinz@peharchitects.com

401 CHASE STREET REHABILITATION

401 Chase Street, Black Hawk, CO 80422

SHEET TITLE
BUILDING SECTIONS

PROJECT: 2014.29
DATE: 07/31/14
DRAWN BY: TCF
CHECKED BY: PEH

SHEET NUMBER
A400

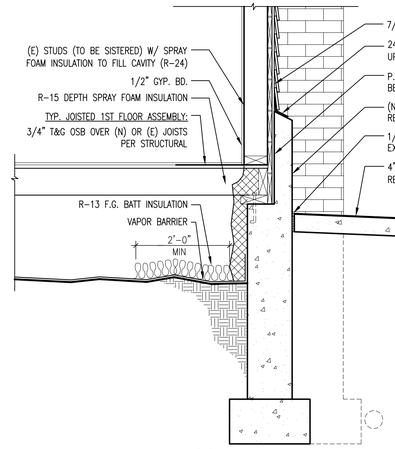

7 WALL SECTION
3/4" = 1'-0"

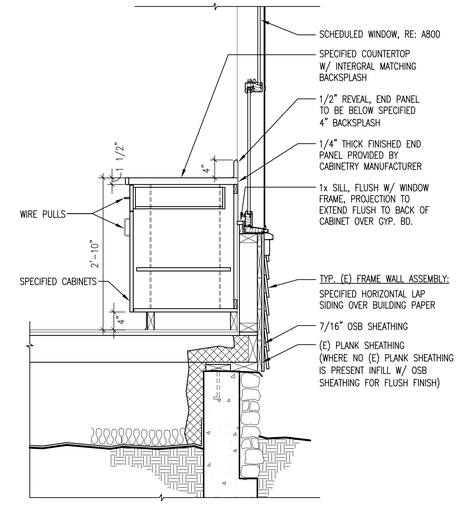

6 WALL SECTION
3/4" = 1'-0"

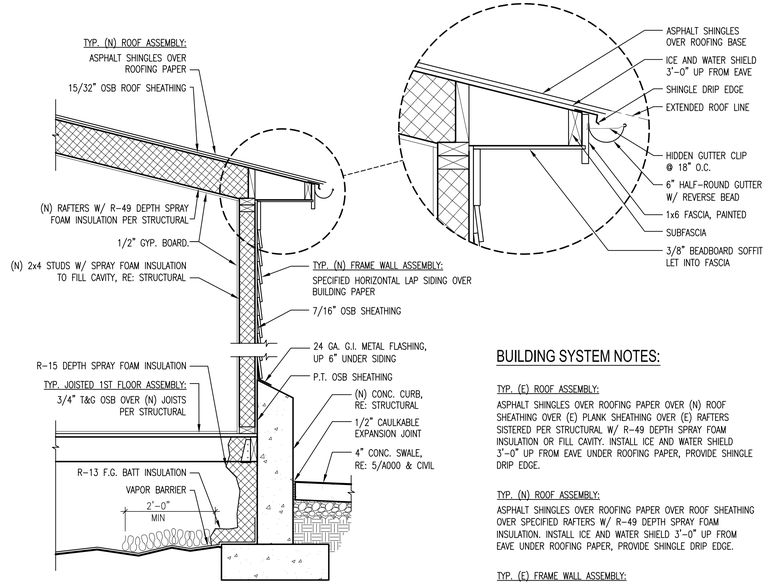

5 WALL SECTION
3/4" = 1'-0"

BUILDING SYSTEM NOTES:

TYP. (E) ROOF ASSEMBLY:
ASPHALT SHINGLES OVER ROOFING PAPER OVER (N) ROOF SHEATHING OVER (E) PLANK SHEATHING OVER (E) RAFTERS SISTERED PER STRUCTURAL W/ R-49 DEPTH SPRAY FOAM INSULATION OR FILL CAVITY. INSTALL ICE AND WATER SHIELD 3'-0" UP FROM EAVE UNDER ROOFING PAPER, PROVIDE SHINGLE DRIP EDGE.

TYP. (N) ROOF ASSEMBLY:
ASPHALT SHINGLES OVER ROOFING PAPER OVER ROOF SHEATHING OVER SPECIFIED RAFTERS W/ R-49 DEPTH SPRAY FOAM INSULATION. INSTALL ICE AND WATER SHIELD 3'-0" UP FROM EAVE UNDER ROOFING PAPER, PROVIDE SHINGLE DRIP EDGE.

TYP. (E) FRAME WALL ASSEMBLY:
SPECIFIED SIDING OVER BUILDING PAPER OVER 7/16" OSB SHEATHING OVER (E) PLANK SHEATHING (E) STUDS (TO BE SISTERED) W/ SPRAY FOAM INSULATION TO FILL CAVITY (R-24) OVER 1/2" GYP. BD. WHERE NO (E) PLANK SHEATHING IS PRESENT INFILL W/ OSB SHEATHING FOR FLUSH FINISH.

TYP. (N) FRAME WALL ASSEMBLY:
SPECIFIED SIDING OVER BUILDING PAPER OVER 7/16" OSB SHEATHING OVER 2X4 STUDS W/ SPRAY FOAM INSULATION TO R-24 OVER 1/2" GYP. BD. (PROVIDE FURRING AS REQ'D TO ALIGN W/ ADJACENT SURFACES).

TYP. CONC. FOUNDATION ASSEMBLY:
2 COATS ASPHALTIC WATER PROOFING OVER (N) CONC. FND. PER STRUCTURAL OVER R-15 DEPTH SPRAY FOAM INSULATION. FILL ALL JOIST POCKETS W/ R-15 DEPTH SPRAY FOAM INSULATION.

TYP. INTERIOR WALL ASSEMBLY:
2X4 @ 16" O.C. W/ 1/2" GYP. BD. EA. SIDE (PROVIDE FURRING AS NECESSARY TO ALIGN WITH ADJACENT SURFACES).

TYP. JOISTED 1ST FLOOR ASSEMBLY:
3/4" T&G OSB OVER (N) OR (E) JOISTS PER STRUCTURAL

TYP. CEILING ASSEMBLY:
(N) JOISTS PER STRUCTURAL OVER 1/2" GYP. BOARD.

NATURAL STONE VENEER:
4"± GROUTED STONE VENEER, TIGHT UNDER FLOOR FRAMING, RE: STRUCTURAL

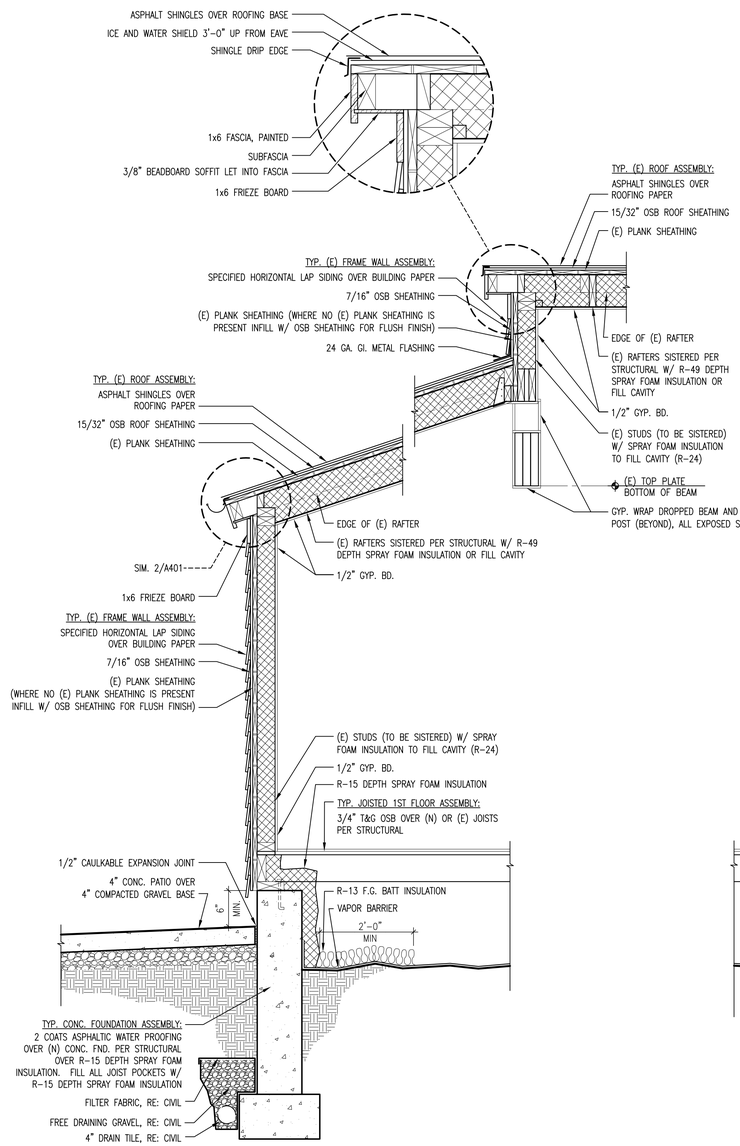

4 WALL SECTION
3/4" = 1'-0"

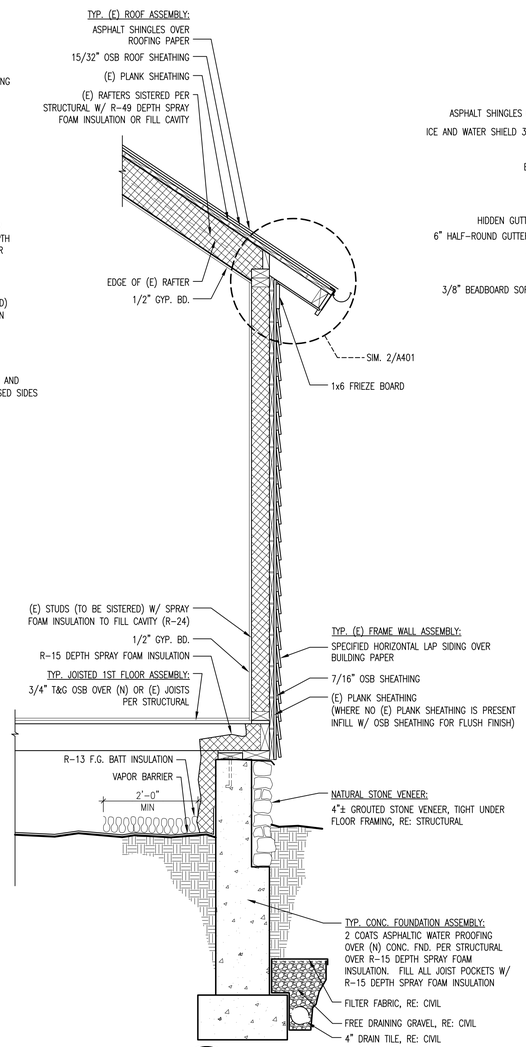

3 WALL SECTION
3/4" = 1'-0"

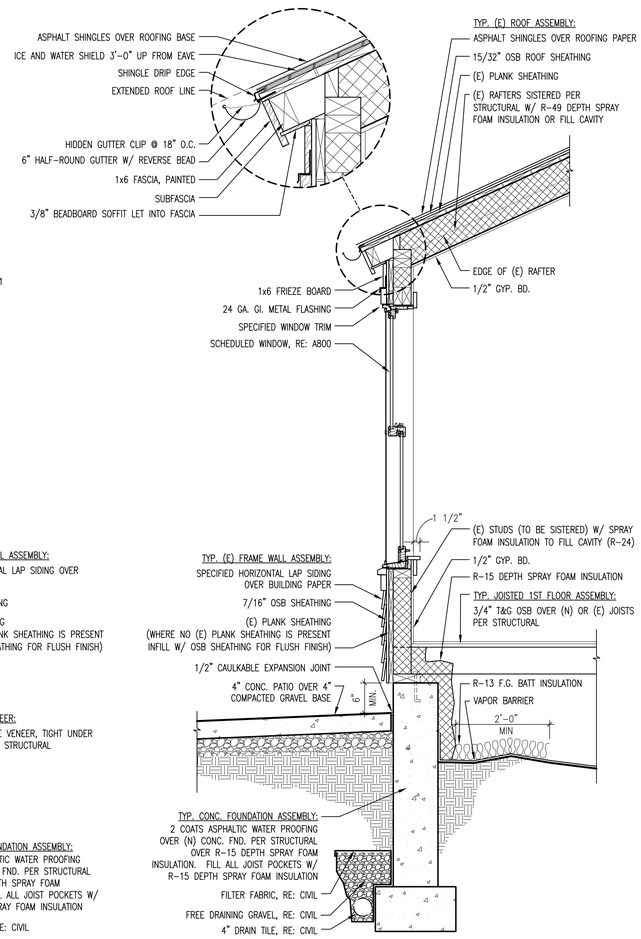

2 WALL SECTION
3/4" = 1'-0"

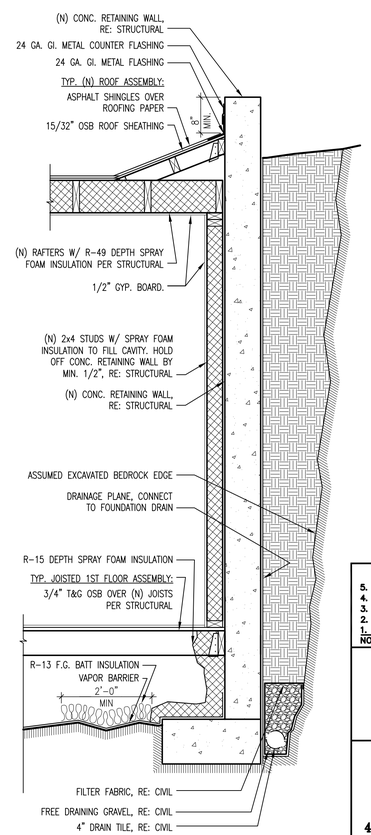

1 WALL SECTION
3/4" = 1'-0"

NOTE: REMOVE BEDROCK AS REQ'D TO MAINTAIN MIN. FOOTING DEPTH PER STRUCTURAL.

0 1 2

NO.	DATE	REVISION
5.	11/24/14	CONSTRUCTION DOCUMENT SUBMISSION
4.	10/20/14	DESIGN DEVELOPMENT SUBMISSION
3.	09/11/14	SCHEMATIC DESIGN SUBMISSION
2.	08/13/14	CONCEPT FLOOR PLANS
1.	08/08/14	AS-BUILT DRAWINGS

PEH ARCHITECTS
1319 Spruce Street Suite 207
Boulder, CO 80302
303-442-0408, fax: 303-447-1905
e-mail: peheinz@peharchitects.com

401 CHASE STREET REHABILITATION

401 Chase Street, Black Hawk, CO 80422

SHEET TITLE
WALL SECTIONS

PROJECT: 2014.29
DATE: 07/31/14
DRAWN BY: TCF
CHECKED BY: PEH

SHEET NUMBER
A401

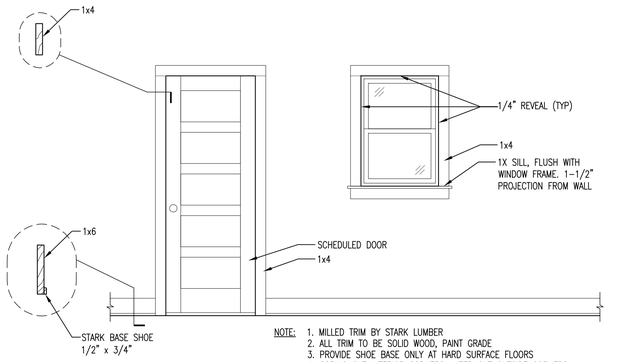

NOTE:
1. MILLED TRIM BY STARK LUMBER
2. ALL TRIM TO BE SOLID WOOD, PAINT GRADE
3. PROVIDE SHOE BASE ONLY AT HARD SURFACE FLOORS
4. COPING CUT INTERIOR CORNERS, MITER CUT OUTSIDE CORNERS
5. PICTURE FRAME DOOR AND WINDOW CASING, WITH CONCEALED POCKET SCREWS

5 TYP. INTERIOR TRIM
1/2" = 1'-0"

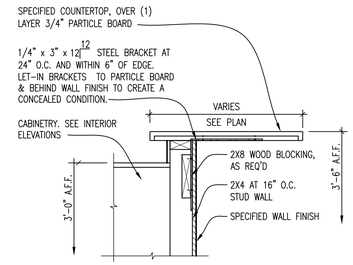

4 RAISED BAR COUNTER SUPPORT DETAIL
1" = 1'-0"

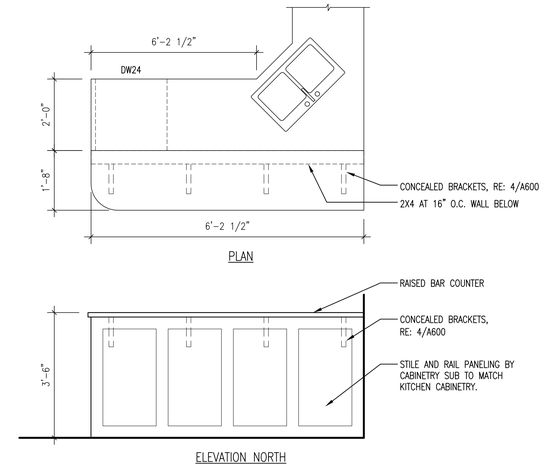

3 RAISED BAR COUNTER
1/2" = 1'-0"

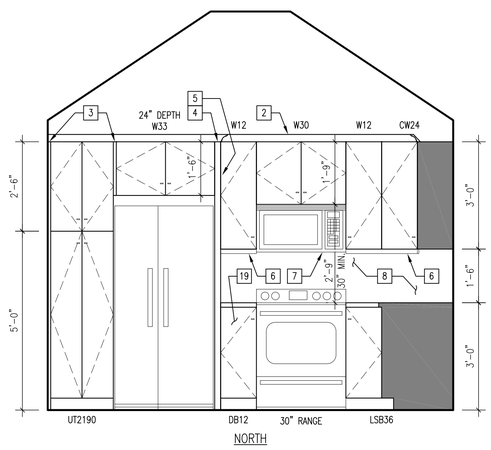

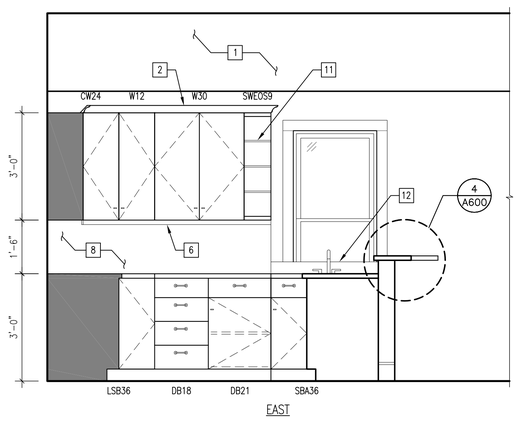

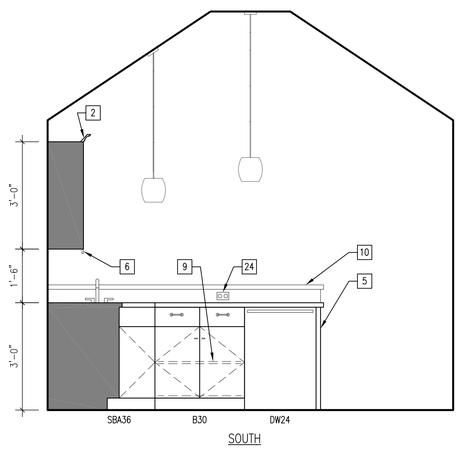

2 KITCHEN INTERIOR ELEVATIONS
1/2" = 1'-0"

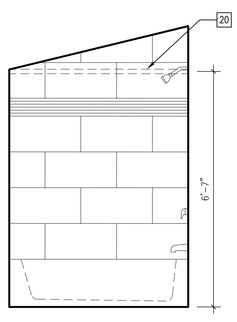

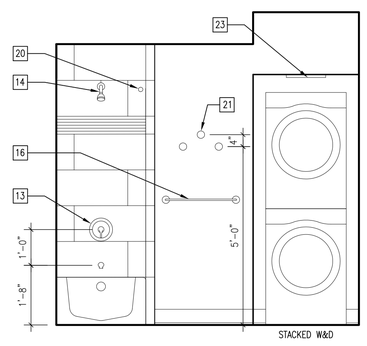

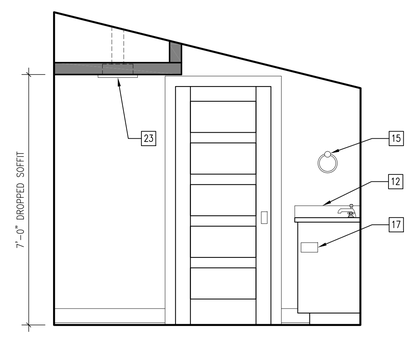

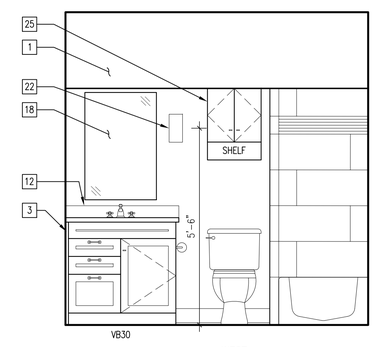

1 BATH INTERIOR ELEVATIONS
1/2" = 1'-0"

0 1 2

CABINETRY LEGEND:

XX 00
SIZE
TYPE

F = FILLER
B = BASE
BOS = BASE OPEN SHELF
BWB = BASE WASTEBASKET
CW = CORNER WALL
DB = DRAWER BASE
DW = DISHWASHER
LSB = LASY SUSAN BASE
PA = FULL HEIGHT PANTRY
SB = SINK BASE
SBA = SINK BASE ANGLE
SQB = SQUARE BOTTOM
SWEOS = SOLID WOOD END OPEN SHELF
UT = UTILITY CABINET
VB = VANITY BASE
VCD = VANITY COMBINATION DRAWER
W = WALL
WEO = WALL OPEN END
WMB = WALL MICROWAVE STYLE B-SHELF
PULLS: = CABINETRY PULL (PER SPECIFICATIONS)
- = CABINETRY T-PULL (PER SPECIFICATIONS)

CABINETRY- GENERAL NOTES:

1. ADJUSTABLE SHELVING IN WALL CABINETS
2. FRAME CONSTRUCTION TO BE FULL OVERLAY
3. NO SLAM HARDWARE ON DOORS AND DRAWERS
4. DRAWERS TO HAVE 3/4" EXTENSION GLIDES
5. TOE KICK TO MATCH CABINETRY
6. SKIRT AND CROWN TRIM AT WALL CABINETS TO MATCH CABINETRY
7. ALL EXPOSED END CABINET FACES TO HAVE MATCHING FINISH END PANEL

ELEVATION- GENERAL NOTES:

1. SEE PROJECT MANUAL FOR INTERIOR FINISHES AND FIXTURE SELECTIONS
2. RE: 5/A600 FOR TRIM PACKAGE

ELEVATION- KEY NOTES:

1. SLOPED CEILING
2. CROWN MOLDING
3. 1" FILLER
4. 2" FILLER
5. FINISHED END PANEL
6. LIGHT VALANCE
7. SPECIFIED MICROHOOD
8. FULL HT. BACKSPLASH
9. ADJUSTABLE ROLL-OUT SHELVES
10. RAISED BAR COUNTER
11. SOLID WOOD WALL END OPEN SHELF W/ SQ. T&B, RADIAL INTERMEDIATE SHELVES
12. 4" HT. SOLID QUARTZ BACKSPLASH
13. CURTAIN ROD AT 6'-7"
14. HAND HELD SHOWER WAND AT 6'-8" HT.
15. TOWEL RING AT 21" A.C.
16. TOWEL BAR AT 42" A.F.F.
17. SURFACE MOUNTED TOILET TISSUE HOLDER AT 26" A.F.F.
18. 24x36 FRAMELESS MIRROR
19. COOKIE SHEET DIVIDERS
20. CURTAIN ROD AT 6'-7" HT.
21. TOWEL HOOK (3 THUS)
22. WALL SCONCE AT 5'-6" HT.
23. EXHAUST FAN, RE: MECHANICAL
24. OUTLETS IN RAISED BAR COUNTER TO BE INSTALLED HORIZONTAL, RE: ELECTRICAL
25. 18x30 BATHROOM CABINET W/ OPEN SHELF BY MANUFACTURED CABINET SUPPLIER, TO MATCH VANITY

NO.	DATE	REVISION
5.	11/24/14	CONSTRUCTION DOCUMENT SUBMISSION
4.	10/20/14	DESIGN DEVELOPMENT SUBMISSION
3.	09/11/14	SCHEMATIC DESIGN SUBMISSION
2.	08/13/14	CONCEPT FLOOR PLANS
1.	08/08/14	AS-BUILT DRAWINGS

PEH ARCHITECTS
1319 Spruce Street Suite 207
Boulder, CO 80302
303-442-0408, fax: 303-447-1905
e-mail: peheinz@peharchitects.com

401 CHASE STREET REHABILITATION

401 Chase Street, Black Hawk, CO 80422

SHEET TITLE
INTERIOR ELEVATIONS

PROJECT: 2014.29
DATE: 07/31/14
DRAWN BY: TCF
CHECKED BY: PEH

SHEET NUMBER
A600

WINDOW SCHEDULE

TEMPERED	MARK	SIZE WIDTH	SIZE HEIGHT	TYPE	MATERIAL	NOTES	MFR.	UNIT #
	A	2'-4"	5'-0"	DH	ALUM CLAD WOOD	LOWER SASH TO BE OBSCURE GLASS	MARVIN	CUSTOM
	B	1'-10"	5'-0"	DH	ALUM CLAD WOOD		MARVIN	CUSTOM
	C	1'-10"	5'-0"	DH	ALUM CLAD WOOD		MARVIN	CUSTOM
YES	D	2'-6"	4'-8"	DH	ALUM CLAD WOOD		MARVIN	CUSTOM
	E	2'-6"	4'-8"	DH	ALUM CLAD WOOD		MARVIN	CUSTOM
	F	1'-7"	2'-0"	AWN	ALUM CLAD WOOD		MARVIN	CUSTOM
	G	1'-7"	2'-0"	AWN	ALUM CLAD WOOD		MARVIN	CUSTOM
	H	1'-8"	2'-0"	AWN	ALUM CLAD WOOD		MARVIN	CUSTOM
	J	1'-8"	2'-0"	AWN	ALUM CLAD WOOD		MARVIN	CUSTOM

1. VERIFY ALL WINDOW DIMENSIONS PRIOR TO ORDERING WINDOWS. CUSTOM WINDOW SIZING WILL BE REQ'D. SEE MANUFACTURER'S MEASURING INSTRUCTIONS.
2. VERIFY SILL BEVEL FOR WINDOW MANUFACTURER.
3. INSTALL WINDOWS PER MANUFACTURER'S RECOMMENDATIONS.
4. REQUEST SHOP DRAWINGS PRIOR TO ORDERING WINDOWS FOR ARCHITECT APPROVAL.
5. ADDITIONAL NOTES FOR WINDOWS IN PROJECT MANUAL
6. GLAZING U-VALUES TO MEET OR EXCEED VALUES LISTED ON A000.
7. REPLACE INTERIOR TRIM W/ (N) TRIM PER 5/A600.
8. INSULATE BETWEEN ROUGH OPENING AND WINDOW FRAME W/ LOW EXPANDING SPRAY FOAM INSULATION.
9. SEE CODE ANALYSIS IN REGARD TO EGRESS REQUIREMENTS.
10. FLASH WINDOWS ACCORDING TO A800.
11. WHERE REQ'D PER IRC R612.2-R612.4 PROVIDE WINDOW OPENING LIMITING DEVICE W/ REPLEASE MECHANISM.

DOOR AND FRAME SCHEDULE

DOOR MARK	SIZE WD	SIZE HGT	SIZE THK	MATL	GLAZING	FRAME	NOTES	MFR.	UNIT #	HDWR.
1	3'-0"	6'-8"	1-3/4"	PNT. WOOD	LOW-E CLEAR	WOOD	(N) 4-PANEL EXTERIOR DOOR, 2 UPPER LITES AND (N) WOOD STORM DOOR	SIMPSON	4006	NEW
2	2'-6"	6'-2"	1-3/4"	PNT. WOOD	LOW-E CLEAR	WOOD	(N) FLAT PANEL HALF-LITE EXTERIOR DOOR (CUSTOM SIZE REQ'D), (N) WOOD STORM DOOR	SIMPSON	7117	NEW
3	5'-0"	6'-8"	1-3/8"	PNT. WOOD	--	WOOD	(N) BYPASS DOUBLE 5-PANEL DOORS	SIMPSON	9255	NEW
4	2'-6"	6'-8"	1-3/8"	PNT. WOOD	--	WOOD	(N) 5-PANEL DOOR, FLAT PANEL	SIMPSON	9255	NEW
5	2'-6"	6'-8"	1-3/8"	PNT. WOOD	--	WOOD	(N) 5-PANEL DOOR, FLAT PANEL	SIMPSON	9255	NEW
6	5'-0"	6'-8"	1-3/8"	PNT. WOOD	--	WOOD	(N) BYPASS DOUBLE 5-PANEL DOORS	SIMPSON	9255	NEW
7	2'-0"	6'-8"	1-3/8"	PNT. WOOD	--	WOOD	(N) 5-PANEL DOOR, FLAT PANEL	SIMPSON	9255	NEW
8	2'-8"	6'-8"	1-3/8"	PNT. WOOD	--	WOOD	(N) 5-PANEL DOOR, FLAT PANEL	SIMPSON	9255	NEW
9	3'-0"	6'-8"	1-3/4"	INSULATED STEEL		WOOD	(N) 4-PANEL INSULATED STEEL EXTERIOR DOOR	THERMATRU	TS214	NEW

1. ADDITIONAL NOTES FOR (N) AND (E) DOORS IN THE PROJECT MANUAL.
2. PROVIDE DOORSTOPS TO PROTECT ADJACENT FINISHES.
3. GLAZING IN DOORS TO BE TEMPERED.
4. GLAZING U-VALUE TO MEET OR EXCEED VALUES LISTED ON A000.
5. G.C. TO VERIFY DOOR SIZES AT (E) DOOR OPENINGS.
6. (N) WOOD DOOR FRAMES AT ALL (N) AND (E) DOOR OPENINGS.
7. REPLACE INTERIOR TRIM W/ (N) TRIM PER 5/A600.
8. SEE PROJECT MANUAL FOR HARDWARE PACKAGES.

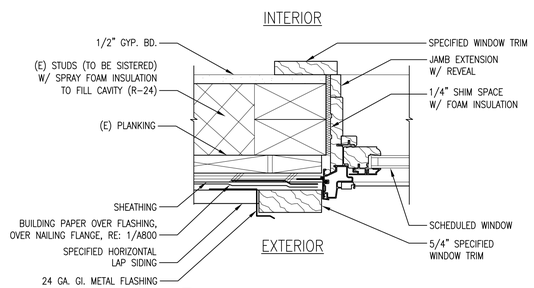

3 TYP. WINDOW JAMB DETAIL
3" = 1'-0"

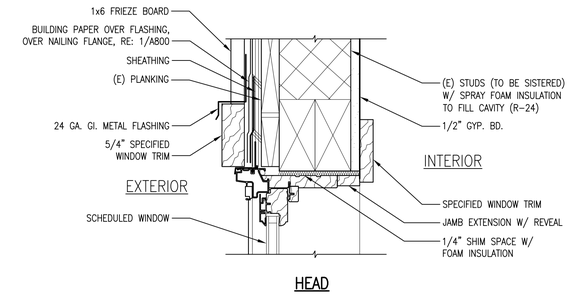

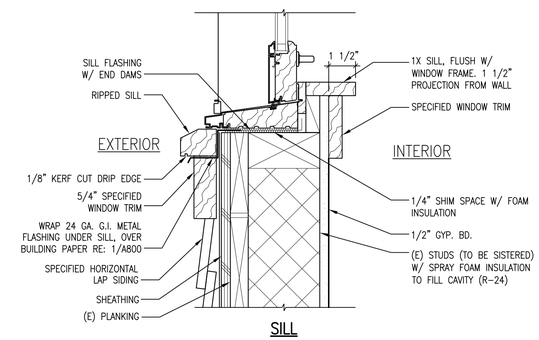

2 TYP. WINDOW HEAD AND SILL DETAIL
3" = 1'-0"

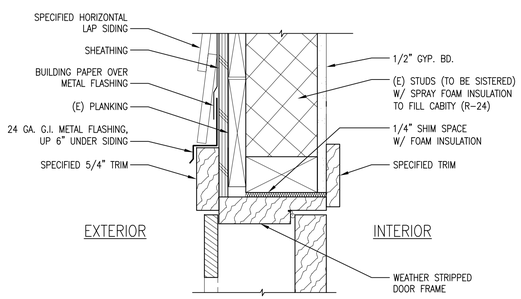

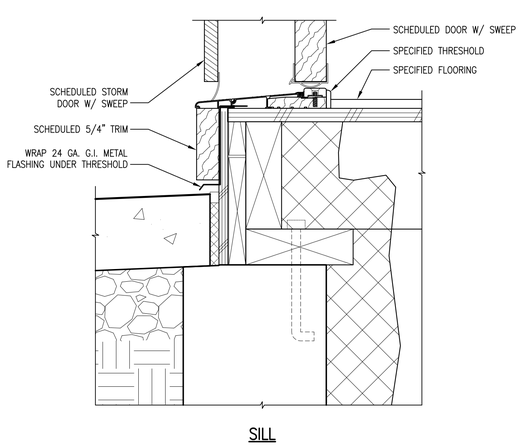

5 TYP. EXTERIOR DOOR HEAD AND SILL DETAIL
3" = 1'-0"

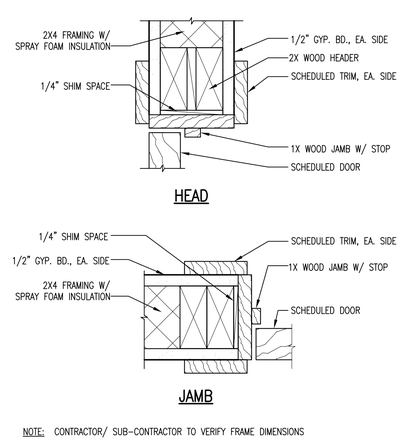

NOTE: CONTRACTOR/ SUB-CONTRACTOR TO VERIFY FRAME DIMENSIONS

4 TYP. INTERIOR DOOR HEAD AND JAMB DETAIL
3" = 1'-0"

STEPS

1. APPLY SILL FLASHING
2. APPLY BEAD OF SEALANT AT BACK OF WINDOW FLANGE & SET WINDOW
3. APPLY BEAD OF SEALANT AT SIDE JAMBS.
4. APPLY JAMB FLASHING
5. APPLY BEAD OF SEALANT AT HEAD
6. APPLY HEAD FLASHING
7. IN WATER SHEDDING FASHION, STARTING AT THE BASE OF THE WALL & WORKING TOWARDS THE TOP, INSTALL THE WRB TO THE FACE OF THE SHEATHING. TUCK WRB UNDER SILL FLASHING, AND OVER JAMB & HEAD FLASHING.
8. WITH SHEATHING TAPE, CONNECT THE WRB TO THE FLASHING (ALL 4 SIDES)

WINDOW INSTALLATION (METHOD A)

WEATHER RESISTIVE BARRIER (WRB) APPLIED AFTER TO THE WINDOW INSTALLATION. FLASHING APPLIED OVER THE FACE OF THE MOUNTING FLANGE. FLASHING TO BE SELF-ADHEARED BUTYL BASED FLASHING (GRACE VYCOR PRO OR EQUAL).

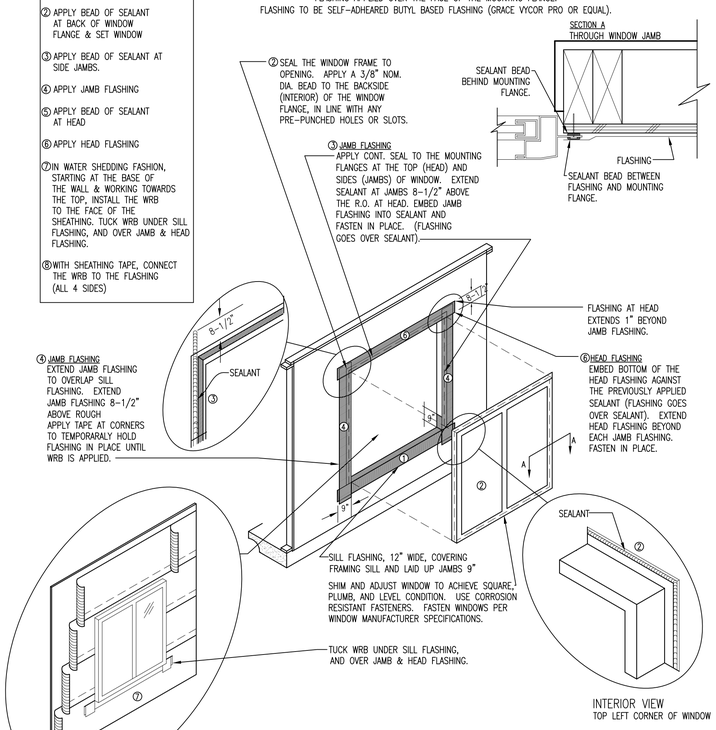

1 TYP. WINDOW INSTALLATION DETAILS
N.T.S.

NO.	DATE	REVISION
5.	11/24/14	CONSTRUCTION DOCUMENT SUBMISSION
4.	10/20/14	DESIGN DEVELOPMENT SUBMISSION
3.	09/11/14	SCHEMATIC DESIGN SUBMISSION
2.	08/13/14	CONCEPT FLOOR PLANS
1.	08/08/14	AS-BUILT DRAWINGS

PEH ARCHITECTS
1319 Spruce Street Suite 207
Boulder, CO 80302
303-442-0408, fax: 303-447-1905
e-mail: peheinz@peharchitects.com

401 CHASE STREET REHABILITATION

401 Chase Street, Black Hawk, CO 80422

SHEET TITLE
WINDOW/DOOR DETAILS AND SCHEDULES

PROJECT: 2014.29
DATE: 07/31/14
DRAWN BY: TCF
CHECKED BY: PEH

SHEET NUMBER
A800

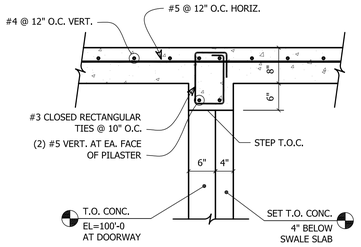

2 S201 PILASTER DETAIL

3/4"=1'-0"

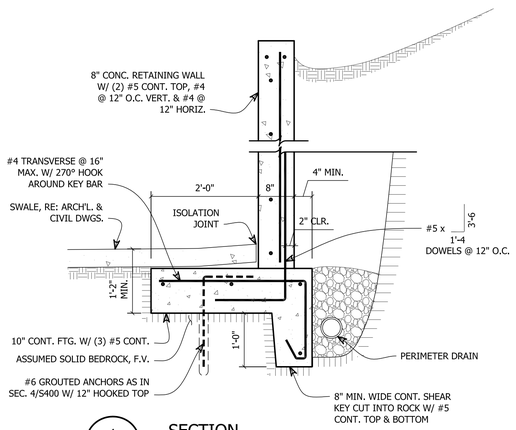

1 S201 SECTION

3/4"=1'-0"

FOOTING SCHEDULE		
SYMBOL	DIMENSIONS	REINFORCEMENT
F16	10" x 1'-4 CONT.	(2) #5 CONT.
F18	10" x 1'-6 CONT.	(2) #5 CONT.
F24	10" x 2'-0 CONT.	(2) #5 CONT.
F30	10" x 2'-6 CONT.	(3) #5 CONT.
F36	10" x 3'-0 CONT.	(3) #5 CONT. & PER DETAIL
F2.0	10" x 2'-0 SQUARE	(3) #4 EA. WAY, BOTTOM
F2.0 x 5.0	10" x 2'-0 x 5'-0	#4 @ 16" EA. WAY, CENTERED

PLAN NOTES

1. SET BOTTOM OF ALL FOOTINGS ON UNDISTURBED NATURAL SOIL OR CONTROLLED STRUCTURAL FILL AT 48" FROST DEPTH OR ON COMPETENT BEDROCK IF ENCOUNTERED ABOVE FROST DEPTH. DOWEL FOOTINGS TO SOLID ROCK IF BEDROCK IS AT A HIGHER ELEVATION THAN 4'-0" FROST DEPTH AS IN SECTION 4/S400.
2. REFER TO GENERAL STRUCTURAL NOTES ON SHEET S400 FOR ADDITIONAL STRUCTURAL INFORMATION AND MATERIAL SPECIFICATIONS.
3. CONTRACTOR TO VERIFY ASSUMED EXISTING (EX.) CONDITIONS PRIOR TO CONSTRUCTION. CONTACT DESIGN TEAM WITH DISCREPANCIES TO DEVELOP ALTERNATE STRUCTURAL SOLUTIONS.
4. ALL ROOF, FLOOR AND WALL FRAMING FOUND TO BE DAMAGED AND/OR ROTTEN SHALL BE REPLACED WITH NEW FRAMING.
5. COORDINATE DIMENSIONS WITH ARCHITECTURAL DRAWINGS AND EXISTING CONDITIONS.
6. CENTER FOOTINGS UNDER WALLS AND COLUMNS UNLESS NOTED OTHERWISE.
7. NEW FIRST FLOOR ELEVATION OF 100'-0"=USGS EL. 8154.9'.
8. NUMBER OF STUDS IN BUILT-UP STUD COLUMNS BELOW NOTED THUS: (X)
9. MATCH WIDTH OF SUPPORTED MEMBER IF NOT NOTED.
10. "A" INDICATES LOCATION OF BUILT-UP STUD COLUMN ABOVE. PROVIDE SOLID SUPPORT UNDERNEATH STUD COLUMN.
11. LUMBER IN CONTACT WITH MASONRY OR CONCRETE OR WITHIN 6" OF SOIL SHALL BE PRESERVATIVE TREATED. HARDWARE IN CONTACT WITH TREATED LUMBER SHALL BE Z-MAX GALVANIZED OR EQUIVALENT.
12. MINIMUM HEADER SIZE IS (2) 2x6 WITH ONE TRIMMER AND ONE KING STUD IN EACH JAMB UNLESS OTHERWISE NOTED THUS: X-T / X-K
13. ADD HEADERS OVER ALL OPENINGS IN EXTERIOR & INTERIOR BEARING WALLS OVER OPENINGS WIDER THAN 3'-0 WHERE NO HEADER EXISTS.
14. EXISTING FOUNDATIONS TO BE DEMOLISHED & REPLACED THROUGHOUT. REFER TO ARCHITECTURAL DRAWINGS FOR EXTENT OF BUILDING TO BE DEMOLISHED.
15. LEVEL/PLUMB EXISTING WALL FRAMING TO A TARGET TOLERANCE OF ¼" PER 8'-0". FRAMING SHALL BE PLUMB/LEVEL PRIOR TO INSTALLATION OF FOUNDATIONS.
16. ADD 7/16" MIN. OSB ROOF SHEATHING OVER (E) PLANK DECKING. NAIL WITH 10d @ 6" AT EDGES & 12" IN FIELD. SHEATH NEW ROOF FRAMING WITH 7/16" MINIMUM OSB NAILED PER THE GENERAL NOTES.
17. COORDINATE T.O. CONC. CURB WITH ARCHITECTURAL ELEVATIONS & WITH GRADES ON CIVIL PLANS. TOP OF CONC. CURB TO BE 6" ABOVE GRADE/SLAB. SLOPE T.O. CURB FOR POSITIVE DRAINAGE.
18. SISTER ALL WALL STUDS THAT ARE NOT CONTINUOUS FROM FLOOR TO ROOF WITH NEW WALL STUD THAT IS CONTINUOUS. SIDENAIL WITH 8d @ 8" MAX.

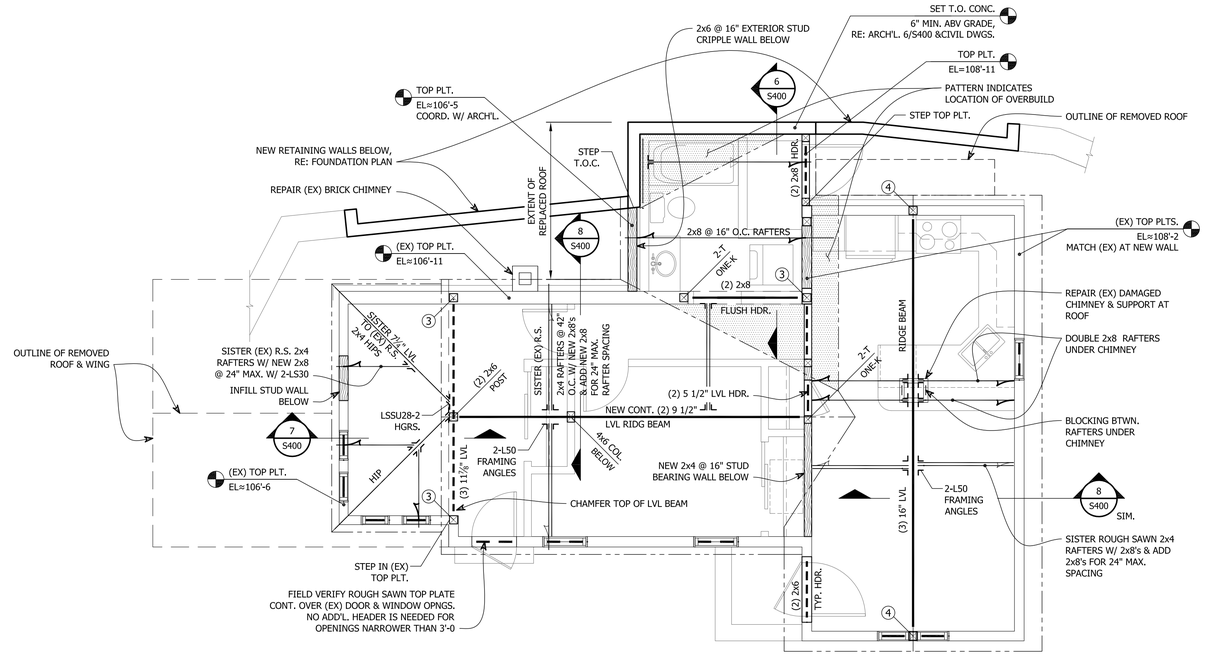

ROOF FRAMING PLAN

SCALE: 1/4"=1'-0"

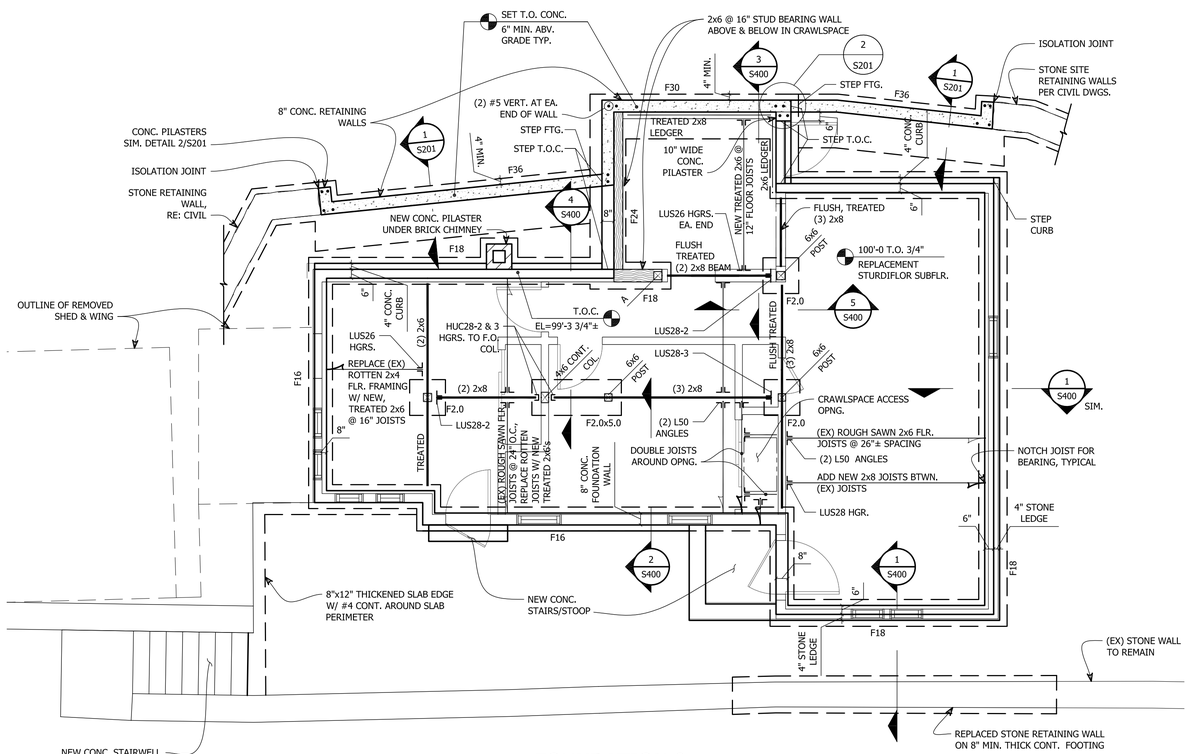

FOUNDATION & FLOOR FRAMING PLAN

SCALE: 1/4"=1'-0"

PLAN NORTH

MOZER-RENN
STRUCTURAL SERVICE
6000 E. EVANS AVENUE
SUITE #1-021
DENVER, CO 80222
303-759-2200
nmozer-renn@MRstructural.com

NO.	DATE	REVISION
5.	11/24/14	CONSTRUCTION DOCUMENT SUBMISSION
4.	10/20/14	DESIGN DEVELOPMENT SUBMISSION
3.	09/11/14	SCHEMATIC DESIGN SUBMISSION
2.	08/13/14	CONCEPT FLOOR PLANS
1.	10/10/14	50% DESIGN DEVELOPMENT

PEH ARCHITECTS
1319 Spruce Street Suite 207
Boulder, CO 80302
303-442-0408, fax: 303-447-1905
e-mail: peheinz@peharchitects.com

401 CHASE STREET REHABILITATION

401 Chase Street, Black Hawk, CO 80422

SHEET TITLE

FOUNDATION & FLOOR FRAMING & ROOF FRAMING PLANS

PROJECT: 0704H14
DATE: 11/24/14
DRAWN BY: SRH
CHECKED BY: NMR

SHEET NUMBER S201

GENERAL STRUCTURAL NOTES

JOB #0704H14 - 401 CHASE STREET RENOVATION

DESIGN LIVE LOADS: 2012 IRC AND CITY OF BLACK HAWK DESIGN ORDINANCE
- SNOW 55 PSF GROUND SNOW WITH ASCE 7 MODIFICATIONS
- WIND 120 MPH ULTIMATE WIND SPEED, EXPOSURE C ON ESCARPMENT
- SEISMIC SEISMIC DESIGN CATEGORY B
- LIVE 40 PSF RESIDENTIAL

REQUIRED VERIFICATION & INSPECTIONS:
- PERIODIC INSPECTION IS REQUIRED OF ALL STRUCTURAL STEEL CONSTRUCTION, INCLUDING WELDED AND BOLTED CONNECTIONS. INSPECTION SHALL ALSO BE PERFORMED AT THE FABRICATION PREMISES OF LOAD-BEARING MEMBERS, UNLESS THE FABRICATOR IS REGISTERED TO PERFORM WORK WITHOUT SPECIAL INSPECTION.
- PERIODIC INSPECTION OF CONCRETE CONSTRUCTION, INCLUDING REINFORCING STEEL, FORMWORK, CURING TECHNIQUES, CAST-IN ANCHORS AND VERIFICATION OF MIX, SLUMP, AIR CONTENT AND TEMPERATURE TESTS SHALL BE PERFORMED WHEN STRENGTH SAMPLES ARE TAKEN FOR EACH POUR.
- PERIODIC VERIFICATION OF SOIL DESIGN CRITERIA SHALL BE PERFORMED BY THE GEOTECHNICAL ENGINEER. CONTINUOUS INSPECTION OF INSTALLATION OF CONTROLLED FILL IS REQUIRED.
- CONTINUOUS INSPECTION OF ROCK ANCHOR INSTALLATION IS REQUIRED.
- CONTINUOUS VERIFICATION OF PROPER PLACEMENT OF COMPACTED FILL IS REQUIRED.
- PERIODIC INSPECTION OF "HIGH-LOAD" WOOD DIAPHRAGMS (SHEAR WALLS) AND OF LOAD-BEARING WOOD ELEMENTS & THEIR CONNECTIONS IS REQUIRED.

FOUNDATION:
- FOUNDATION DESIGN IS IN ACCORDANCE WITH RECOMMENDATIONS CONTAINED IN SOILS INVESTIGATION REPORT NUMBER 14.173.A PREPARED BY CESARE, INC. DATED AUGUST 15, 2014.
- THE REPORT IS HEREBY REFERENCED AND EXCEPT WHERE OTHERWISE SPECIFICALLY NOTED HEREIN, ALL RECOMMENDATIONS AND PRECAUTIONS CONTAINED IN THAT REPORT SHALL BE ADHERED TO BY THE CONTRACTOR.
- FOOTINGS SHALL BE PLACED ON NATURAL, UNDISTURBED SOILS, ON CONTROLLED STRUCTURAL FILL OR ON COMPETENT BEDROCK, APPROVED BY THE SOIL ENGINEER.
- MAXIMUM DESIGN SOIL PRESSURE: 2500 PSF.
- LATERAL SOIL PRESSURE (EQUIVALENT FLUID PRESSURE):
  - RESTRAINED FOUNDATION WALLS: 70 pcf AT-REST WITH ONSITE SOIL
  - CANTILEVERED RETAINING WALLS: 45 pcf/FT. ACTIVE WITH ONSITE SOIL STRUCTURAL FILL (45 pcf/FT. MINUS 3" GRANULAR SOILS)
  - RESISTING: 275 pcf PASSIVE 0.6 COEFFICIENT OF FRICTION.
- WHERE APPLICABLE, BACKFILL ALL RETAINING WALLS WITH FREE DRAINING GRANULAR MATERIAL EXCEPT THE TOP TWO FEET.
- PROVIDE PERIMETER DRAIN SYSTEM WITH INVERT MINIMUM OF 6" BELOW BOTTOM OF FOUNDATION. EXTEND PERIMETER DRAIN TO DAYLIGHT OR TO SUMP.
- SLOPE PERIMETER GRADE AWAY FROM BUILDING.
- PLACE CONCRETE CONTINUOUSLY WITHOUT HORIZONTAL COLD JOINTS UNLESS SPECIFICALLY NOTED OTHERWISE

CONCRETE AND REINFORCEMENT:
- CONCRETE SHALL CONFORM TO APPLICABLE PROVISIONS OF ACI 301 AND 318.
- MINIMUM 28 DAY COMPRESSIVE STRENGTH (F'C) AND DURABILITY REQUIREMENTS ARE AS FOLLOWS:
  - FOUNDATION WALLS & EXTERIOR SLABS W/ EXTERIOR EXPOSURE: 4000 PSI W/ 0.45 MAXIMUM WATER/CEMENT RATIO & AIR ENTRAINMENT PER ACI 318-08
  - INTERIOR SLABS & BELOW-GRADE FOOTINGS: 3500 PSI W/ 0.5 MAX. W/C RATIO & AIR ENTRAINMENT
  - EXTERIOR SLABS: 4500 PSI W/ 0.45 MAX. WATER/CEMENT RATIO & AIR ENTRAINMENT
- CEMENT TYPE II FOR RESISTANCE TO MODERATE TO SEVERE SULFATE EXPOSURE
- DEFORMED REINFORCEMENT: ASTM A615 GRADE 60
- REINFORCEMENT SHALL BE FABRICATED AND PLACED PER ACI MANUAL OF STANDARD PRACTICE (ACI_315). AT SPLICES, LAP BARS 50 DIAMETERS UNLESS NOTED OTHERWISE.
- MINIMUM 2 #5 AROUND ALL FOUR SIDES OF ALL OPENINGS, EXTEND MIN. 2'-6 HORIZONTALLY BEYOND OPENINGS. VERTICAL BARS SHALL BE FULL HEIGHT.
- CONCRETE COVER OVER REINFORCING: 1 1/2" FOR CONCRETE PLACED AGAINST FORMS; 3" FOR CONCRETE PLACED AGAINST EARTH.
- IN CONTINUOUS MEMBERS, SPLICE TOP BARS AT MID SPAN AND BOTTOM BARS OVER SUPPORTS.
- KEEP REINFORCEMENT CLEAN AND FREE OF DIRT, OIL, SCALE. OIL FORMS PRIOR TO PLACING REINFORCEMENT.

STRUCTURAL STEEL & FASTENERS:
- ANGLES, PLATES, MISC.: ASTM A36
- ADJUSTABLE PIPE COLUMNS: 3" NOMINAL DIAMETER "HEAVY DUTY" SCHEDULE 40 (3.5" OUTSIDE DIAMETER). MAXIMUM SCREW EXTENSION OF 2"
- ANCHOR BOLTS: ASTM A307 OR A36
- CONNECTOR BOLTS: ASTM A307
- EXPANSION AND ADHESIVE ANCHORS SHALL BE NER APPROVED, INSTALLED IN ACCORDANCE WITH MANUFACTURERS SPECIFICATIONS.
  - IN CONCRETE: WEDGE TYPE
  - IN SOLID MASONRY: SLEEVE TYPE
- NON-SHRINK GROUT BENEATH COLUMN BASE AND BEAM BEARING PLATES SHALL BE NON-METALLIC WITH MINIMUM COMPRESSIVE STRENGTH 5000PSI.
- WELDING SHALL BE BY QUALIFIED WELDERS. E70XX ELECTRODES.
- IF APPLICABLE, ALL STRUCTURAL STEEL SHALL BE FABRICATED AND ERECTED PER THE CURRENT EDITION OF AISC STEEL CONSTRUCTION MANUAL.

LOOSE LINTELS:
- MINIMUM LINTEL EXCEPT AS NOTED, ONE ANGLE FOR EACH 4" OF WALL THICKNESS TO BEAR 6" EACH END:
  - OPENINGS TO 4'-0 L 3-1/2 X 3-1/2 X 1/4
  - 4'-0 TO 5'-4 L 5 X 3-1/2 X 1/4
  - 5'-5 TO 6'-6 L 6 X 3-1/2 X 5/16

WOOD FRAMING:
- DIMENSION LUMBER IS DESIGNED AND SHALL BE SUPPLIED USING BASE VALUES DESIGN CRITERIA FOR HEM-FIR #2 AND BETTER (MAXIMUM MOISTURE CONTENT 19%) UNLESS OTHERWISE NOTED IN THE DRAWINGS
- PLATES: SILL PLATES: WOLMANIZED HEM FIR OR SOUTHERN PINE
  TOP AND BOTTOM PLATES: HEM FIR
- HEM FIR STUDS U.O.N: NON-BEARING PARTITION WALLS: STUD GRADE
  BEARING & EXTERIOR WALLS: NO. 2 AND BETTER
- BEAMS AND COLUMNS: DOUGLAS FIR NO. 2
- LUMBER IN CONTACT WITH CONCRETE OR MASONRY OR WITHIN 6" OF SOIL SHALL BE PRESERVATIVE-TREATED
- LAMINATED VENEER LUMBER (LVL): MANUFACTURED 1 3/4" WIDE MICROLLAMS (ML) BY TRUS JOIST OR EQUIVALENT WITH THE FOLLOWING MINIMUM PROPERTIES: FB=2,600 PSI, E=1,900,000 PSI, FV=285 PSI, DEPTH NOTED ON PLANS.
- LSL RIM JOISTS ARE 1¼" THICK LAMINATED STRAND LUMBER BY iLEVEL OR APPROVED EQUIVALENT.
- ALL PLYWOOD AND ORIENTED STRAND BOARD (OSB) SHEATHING SHALL BE ENGINEERED GRADES WITH APA GRADE STAMP INDICATING APPROPRIATE MAXIMUM SPACING OF SUPPORTS.
- FLOOR SHEATHING: ¾" STURDIFLOR, GLUED & NAILED.
- ROOF SHEATHING: MINIMUM ⅝" CDX PLYWOOD, OR 7/16" OSB, APA 32/16, NAILED.
- WALL SHEATHING: 1/2" CDX PLYWOOD OR 7/16" OSB, APA 24/16, BLOCKED AND NAILED.
- NAIL WALL SHEATHING WITH 8D COMMONS AT 4" O.C. AT PANEL EDGES, AND 12" O.C. INTERMEDIATE FRAMING U.N.O. BLOCK AND NAIL ALL EDGES BETWEEN STUDS. SHEATHING SHALL BE CONTINUOUS FROM BOTTOM PLATE TO TOP PLATE. CUT IN "L" AND "T" SHAPES AROUND OPENINGS. LAP SHEATHING OVER RIM JOISTS MIN. 4" AT FLOOR TO TIE UPPER AND LOWER STUD WALLS TOGETHER. MINIMUM HEIGHT OF SHEATHING PANELS SHALL BE 16" TO ASSURE THAT PLATES ARE TIED TO STUDS. USE MINIMUM 3-8D PER STUD AND NAIL PLATES WITH EDGE NAIL @ 4" SPACING.
- SHEATH ALL EXTERIOR WALLS. SHEATH INTERIOR WALLS AS SHOWN ON THE DRAWINGS.
- MINIMUM NAILING SHALL COMPLY WITH IBC TABLE 2304.9.1 EXCEPT WHERE MORE OR LARGER NAILING SHOWN ON DRAWINGS.
- ALL ROOF RAFTERS, JOISTS AND BEAMS SHALL BE ANCHORED TO SUPPORTS WITH METAL FRAMING ANCHORS. TRUSS-TO-TRUSS CONNECTIONS SPECIFIED BY THE TRUSS SUPPLIER.
- DOUBLE JOISTS UNDER PARTITIONS WHERE JOISTS ARE PARALLEL TO PARTITIONS.
- ALL WALL STUDS SHALL BE CONTINUOUS FROM FLOOR TO FLOOR OR FROM FLOOR TO ROOF.
- CROSS BRIDGE ALL DIMENSION LUMBER ROOF AND FLOOR JOISTS AT MIDSPAN AND PROVIDE SOLID BLOCKING OR RIM JOISTS AT ALL JOIST SUPPORTS AND JOIST ENDS.
- METAL CONNECTORS: SIMPSON STRONG TIE UNLESS OTHERWISE NOTED, INSTALLED WITH NUMBER AND TYPE OF NAILS TO ACHIEVE MAXIMUM RATED CAPACITY. NOTE THAT HEAVY DUTY AND SKEWED HANGERS MAY REQUIRE SPECIAL ORDER.
- ALL BEAMS SHALL BE BRACED AGAINST ROTATION AT POINTS OF BEARING.
- UNLESS OTHERWISE INDICATED, INSTALL TWO LENGTHS OF SOLID BLOCKING X JOIST DEPTH X 12 INCHES LONG IN FLOOR FRAMING UNDER COLUMN LOADS. COLUMNS MUST HAVE A CONTINUOUS LOAD PATH TO FOUNDATION.
- LEAD HOLES FOR LAG BOLTS SHALL BE 60% TO 70% OF LAG SHANK DIAMETER IN COMPLIANCE WITH AITC CRITERIA.

GENERAL REQUIREMENTS
- THE STRUCTURAL DRAWINGS ILLUSTRATE THE COMPLETED STRUCTURE WITH ALL ELEMENTS IN THEIR FINAL POSITIONS, PROPERLY SUPPORTED AND BRACED. THE CONTRACTOR, IN THE PROPER SEQUENCE, SHALL PROVIDE PROPER SHORING AND BRACING AS MAY BE REQUIRED TO ACHIEVE THE FINAL COMPLETED STRUCTURE. BRACING AND SHORING DESIGN, IF REQUIRED, SHALL BE BY A COLORADO REGISTERED ENGINEER FOR THE CONTRACTOR.
- DUTY OF COOPERATION: RELEASE OF THESE CONTRACT DOCUMENTS ASSUMES FURTHER COOPERATION AMONG THE OWNER, CONTRACTOR AND DESIGN TEAM. ALTHOUGH THE ENGINEER HAS PERFORMED DESIGN SERVICES WITH DUE CARE AND DILIGENCE, PERFECTION CANNOT BE GUARANTEED. COMMUNICATION IS IMPERFECT AND EVERY CONTINGENCY CANNOT BE ANTICIPATED. THE ENGINEER DOES NOT WARRANT THAT THE DRAWINGS ARE PERFECT OR FREE OF DEFECTS. ANY AMBIGUITY OR DISCREPANCY DISCOVERED BY THE USE OF THESE PLANS SHALL BE REPORTED IMMEDIATELY TO THE DESIGN TEAM SO THAT A SOLUTION CAN BE DEVELOPED. A FAILURE TO COOPERATE THROUGH NOTIFICATION RELIEVES THE DESIGN TEAM FROM RESPONSIBILITY AND ALL CONSEQUENCES.
- OBSERVATIONS OF FOUNDATION REINFORCING OR FRAMING REQUIRED BY THE OWNER, LENDER, INSURER, BUILDING DEPARTMENT OR ANY OTHER PARTY WILL BE ACCOMPLISHED BY THE ENGINEER AT THE OWNER'S EXPENSE. AT LEAST 48 HOURS ADVANCE NOTICE IS REQUESTED.
- ALL SLABS ON GRADE SHALL BE SEPARATED FROM ADJACENT STRUCTURAL AND FINISH ELEMENTS TO ALLOW FREE MOVEMENT OF THE SLAB, UNLESS SPECIFICALLY SHOWN AND NOTED OTHERWISE.
- THE CONTRACTOR SHALL INSPECT EXISTING CONDITIONS TO VERIFY ASPECTS OF THE WORK SHOWN ON THE DRAWINGS. VARIATIONS OR DISCREPANCIES SHALL BE REPORTED TO THE DESIGN TEAM PRIOR TO PROCEEDING WITH THE WORK TO ALLOW REMEDIES TO BE DEVELOPED. MOZER-RENN STRUCTURAL SERVICE SHALL NOT BE HELD LIABLE FOR MATERIALS, LABOR OR RE-DESIGN COSTS ASSOCIATED WITH EXISTING CONDITIONS WHICH DIFFER FROM THOSE INDICATED ON THE DRAWING.

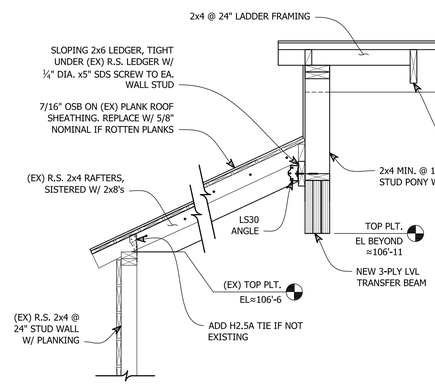

7 S400 SECTION 3/4"=1'-0"

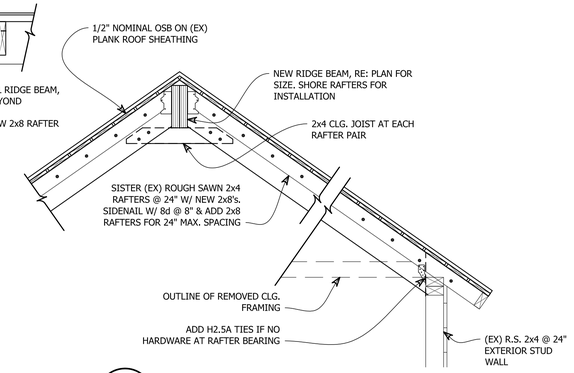

8 S400 SECTION 3/4"=1'-0"

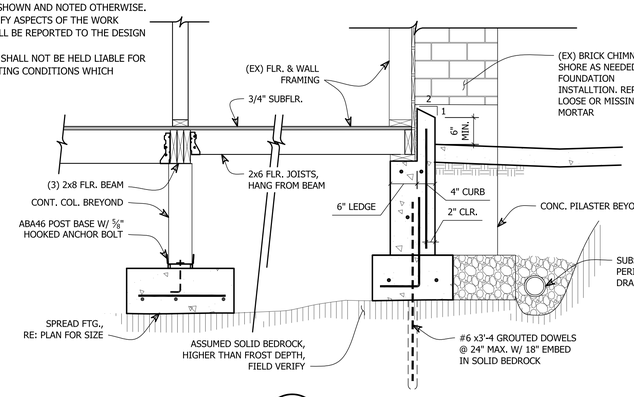

4 S400 SECTION 3/4"=1'-0"

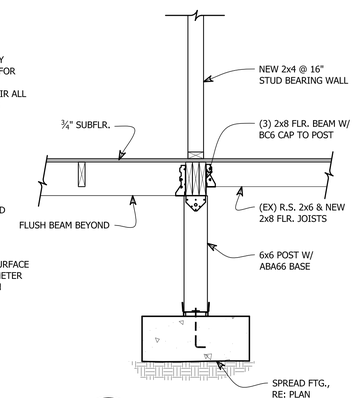

5 S400 SECTION 3/4"=1'-0"

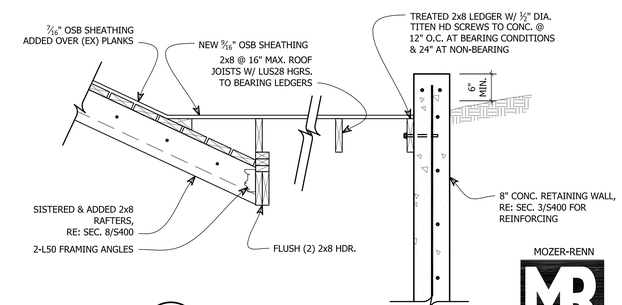

6 S400 SECTION 3/4"=1'-0"

MOZER-RENN
STRUCTURAL SERVICE
6000 E. EVANS AVENUE
SUITE #1-021
DENVER, CO 80222
303-759-2200
nmozer-renn@MRstructural.com

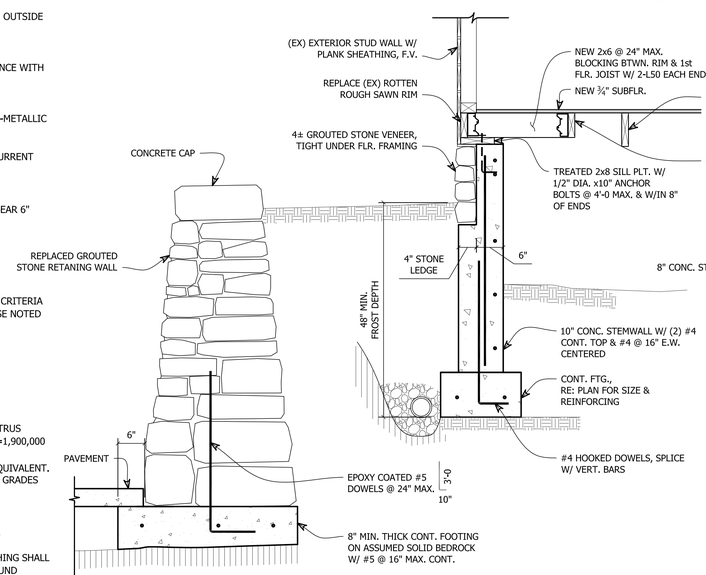

1 S400 SECTION 3/4"=1'-0"

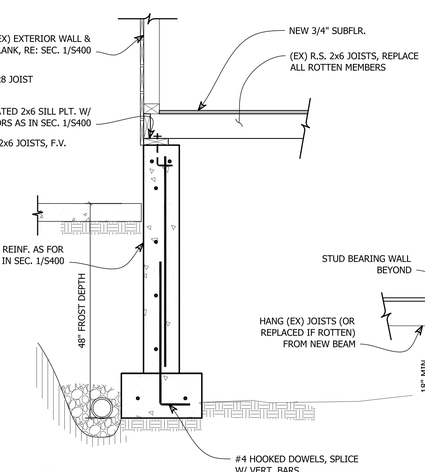

2 S400 SECTION 3/4"=1'-0"

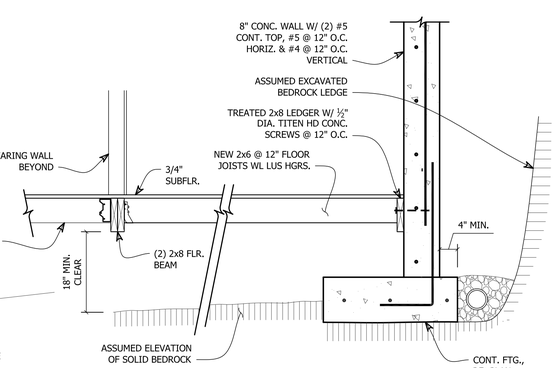

3 S400 SECTION 3/4"=1'-0"

NO.	DATE	REVISION
5.	11/24/14	CONSTRUCTION DOCUMENT SUBMISSION
4.	10/20/14	DESIGN DEVELOPMENT SUBMISSION
3.	09/11/14	SCHEMATIC DESIGN SUBMISSION
2.	08/13/14	CONCEPT FLOOR PLANS
1.	10/10/14	50% DESIGN DEVELOPMENT

PEH ARCHITECTS
1319 Spruce Street Suite 207
Boulder, CO 80302
303-442-0408, fax: 303-447-1905
e-mail: peheinz@peharchitects.com

401 CHASE STREET REHABILITATION

401 Chase Street, Black Hawk, CO 80422

SHEET TITLE
SECTIONS

PROJECT: 0704H14
DATE: 11/24/14
DRAWN BY: SRH
CHECKED BY: NMR

SHEET NUMBER
S400

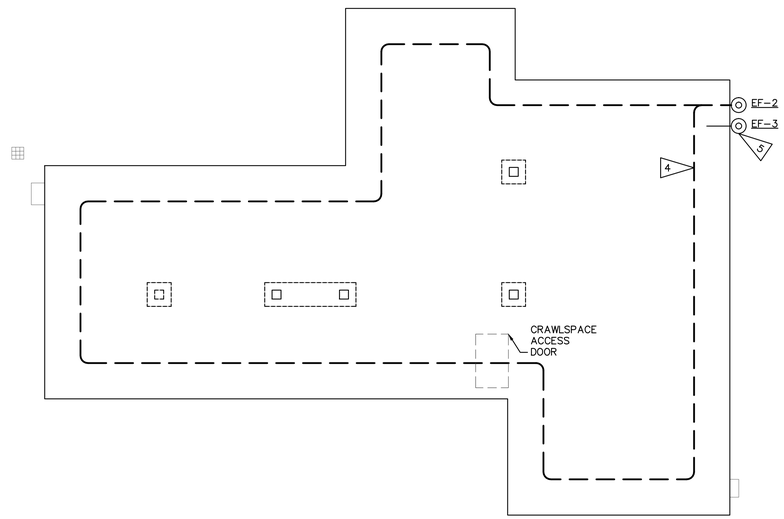

CRAWLSPACE PLAN

SCALE: 1/4" = 1'-0"

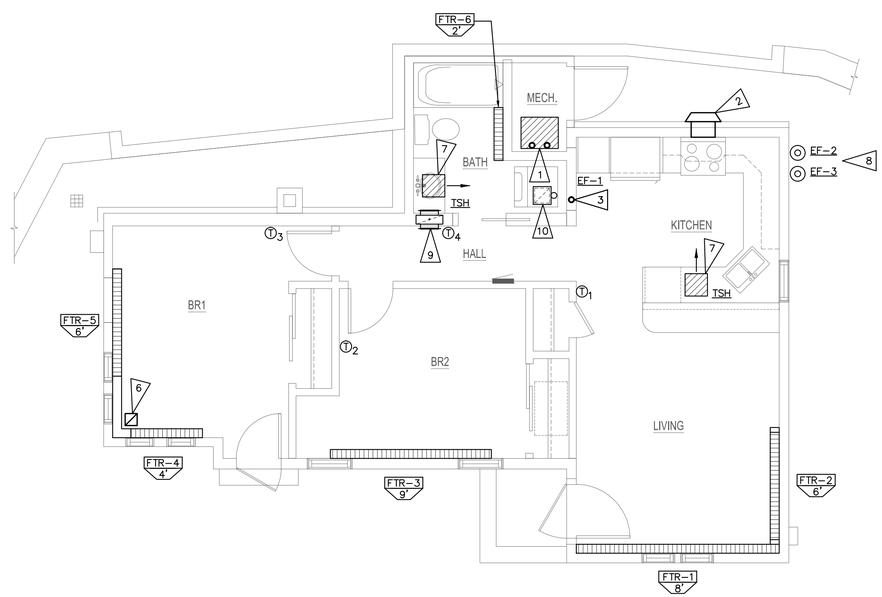

MECHANICAL FLOOR PLAN

SCALE: 1/4" = 1'-0"

GENERAL NOTES

1. THERMOSTATS TO HAVE DIRECT 24 V POWER WITH BATTERY BACKUP. HONEYWELL TH2110D. PROVIDE 24V, 150VA TRANSFORMER. REFER TO ELECTRICAL DRAWINGS FOR LOCATION OF BOX FOR TRANSFORMER IN UTILITY ROOM.
2. DUCTING FOR RADON FAN TO BE 4" PVC. IN CRAWLSPACE, INSTALL PERFORATED 4" PVC PIPE IN WIDE TRENCH UNDER THE VAPOR RETARDER.
3. ALL HEATING WATER PIPING IN CRAWLSPACE TO BE INSULATED PER SPECIFICATIONS.

FLAG NOTES

1. ROUTE COMBUSTION AND FLUE VENTS THROUGH ROOF PER MANUFACTURERS RECOMMENDATIONS.
2. DUCT EXHAUST FROM MICRO HOOD TO EXTERIOR. PROVIDE WALL CAP.
3. ROUTE DRYER EXHAUST INTO RECESSED DRYER DUCT BOX AND THEN THROUGH ROOF. PROVIDE WEATHER CAP. DRYER EXHAUST BOX TO BE IN-O-VATE TECHNOLOGIES MODEL #350. COORDINATE CENTERLINE HEIGHT OF VENT FOR BOX PLACEMENT.
4. 4" PERFORATED PVC RADON DUCTING BELOW VAPOR BARRIER.
5. ROUTE INTAKE FOR EF-3 INTO CRAWLSPACE THROUGH RIM JOIST.
6. 6"X6" FLOOR REGISTER. REGGIO REGISTER CAST IRON SCROLL DESIGN. EXTEND 6/6 DUCT DOWN 6" AND ELBOW OVER 6" IN CRAWLSPACE.
7. LOCATE TOE SPACE HEATER IN CABINETRY TOE KICK SPACE.
8. ROUTE 4" PVC EXHAUST DUCTS UP TO ROOF LEVEL. PROVIDE RAIN CAPS.
9. 3/10 TRANSFER AIR DUCT. PROVIDE TWO TITUS 350RL GRILLES 8/8. GRILLE IN RESTROOM TO TOUCH CEILING. GRILLE IN HALLWAY TO BE 12" AFF.
10. INSTALL BATH EXHAUST FAN IN DROPPED CEILING. ROUTE 4" EXHAUST THROUGH ROOF. PROVIDE WEATHER CAP.

Seward Mechanical Systems

Design – Engineering

Paul D. Seward, P.E.

801 Main Street
Suite 310
Louisville, Colorado
80027

Phone: 303.926.9245
Fax: 303.926.9241
Email: seward@steam-engine.com

Proj#: 14041

NO.	DATE	REVISION
5.	11/24/14	CONSTRUCTION DOCUMENT SUBMISSION
4.	10/20/14	DESIGN DEVELOPMENT SUBMISSION
3.	09/11/14	SCHEMATIC DESIGN SUBMISSION
2.	08/13/14	CONCEPT FLOOR PLANS
1.	08/08/14	AS-BUILT DRAWINGS

PEH ARCHITECTS
1319 Spruce Street Suite 207
Boulder, CO 80302
303-442-0408, fax: 303-447-1905
e-mail: peheinz@peharchitects.com

401 CHASE STREET
REHABILITATION

401 Chase Street, Black Hawk, CO 80422

SHEET TITLE

MECHANICAL AND PLUMBING PLAN

PROJECT: 2014.29
DATE: 07/31/14
DRAWN BY: PS
CHECKED BY: PS

SHEET NUMBER

M201

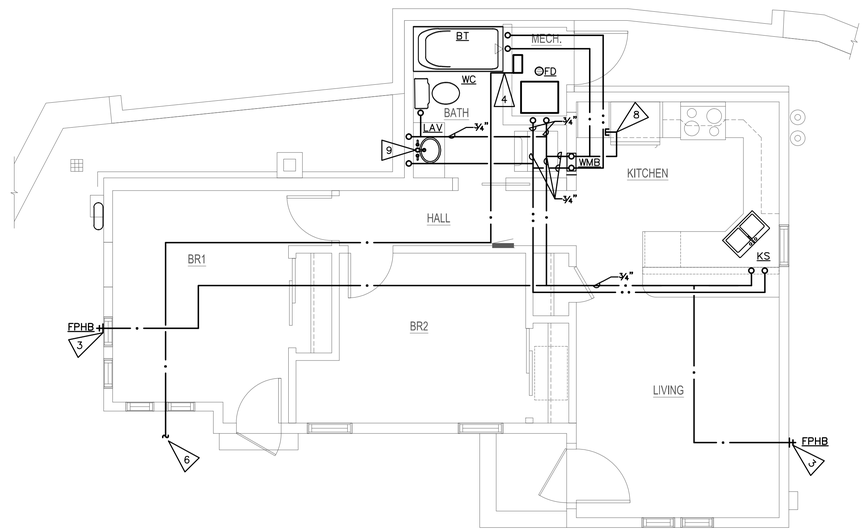

DOMESTIC WATER FLOOR PLAN

SCALE: 1/4" = 1'-0"

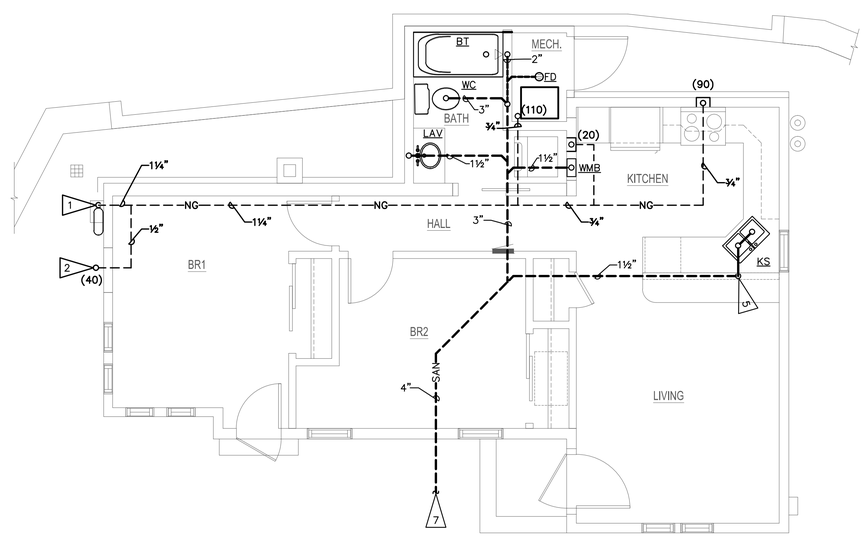

WASTE AND VENT FLOOR PLAN

SCALE: 1/4" = 1'-0"

PIPING LEGEND

ABBR	SYMBOL	DESCRIPTION
CW		DOMESTIC COLD WATER
DHW		DOMESTIC HOT WATER
RECIRC		DOMESTIC RECIRCULATION
SAN	SAN	SANITARY WASTE (BELOW GRADE)
SAN	SAN	SANITARY WASTE (SUSPENDED)
VENT	V	SANITARY VENT
NAT. GAS	NG	NATURAL GAS
HB		WALL HYDRANT OR HOSE BIBB
FD		FLOOR DRAIN
POC		POINT OF CONNECTION

NOTE:
1. IN GENERAL, LIGHT LINE WEIGHTS INDICATE EXISTING PIPING AND HEAVY INDICATE NEW PIPING.
2. IN GENERAL, DASHED PIPING INDICATES BELOW GRADE AND SOLID PIPING INDICATES ABOVE GRADE.

ROUGH-IN PIPING SCHEDULE

ITEM	HW	CW	WASTE (INCHES)	VENT (INCHES)
LAVATORIES	½	½	1½	1¼
KITCHEN SINK	½	½	1½	1¼
WATER CLOSET (FLUSH TANK)	–	½	3	2
FLOOR DRAIN	–	–	**	**
HOSE BIBB	–	½	–	–
SHOWER	½	½	2	1¼

** Or as recommended by the urinal manufacturer.*
*** Denotes as indicated on drawings.*

GENERAL NOTES

1. LOCATION OF PIPING ON PLANS IS GRAPHIC AND NOT INTENDED TO SHOW EXACT PLACEMENT OF PIPE ROUTING.
2. DOMESTIC HOT AND COLD WATER TO BE ROUTED IN CRAWL SPACE. INSULATE WITH 1" FIBERGLASS INSULATION.
3. NATURAL GAS PIPING TO BE ROUTED IN CRAWL SPACE.
4. PROVIDE RECESSED BOXES IN WALLS FOR GAS STUBOUTS.

FLAG NOTES

1. ROUTE NATURAL GAS IN CRAWLSPACE. PENETRATE RIM BOARD ABOVE FOUNDATION.
2. PROVIDE GAS COCK AND QUICK CONNECT GAS FOR BARBEQUE. COORDINATE LOCATION.
3. ROUTE PIPING TO FPHB IN RIM JOIST.
4. ROUTE DOMESTIC COLD WATER TO BACKFLOW PREVENTER BEFORE SERVING ANY FIXTURES.
5. PROVIDE AIR ADMITTANCE VALVE FOR KITCHEN SINK. INSTALL ABOVE FLOOD LEVEL OF RIM.
6. WATER SERVICE ENTRY. COORDINATE WITH CIVIL.
7. TIE INTO NEW SANITARY SERVICE. CONFIRM LOCATION AND INVERT.
8. ICE MAKER OUTLET BOX. ROUTE ¼" CU LINE TO IT WITH BALL VALVE. MOUNT RECESSED BOX IN TOE SPACE OF ADJACENT PANTRY CABINET.
9. ROUTE DOMESTIC WATER LINES IN CABINETRY AND NOT IN EXTERIOR WALL.

Seward Mechanical Systems
Design – Engineering
Paul D. Seward, P.E.
801 Main Street
Suite 310
Louisville, Colorado
80027
Phone: 303.926.9245
Fax: 303.926.9241
Email: seward@steam-engine.com
PROJ#: 14041

NO.	DATE	REVISION
5.	11/24/14	CONSTRUCTION DOCUMENT SUBMISSION
4.	10/20/14	DESIGN DEVELOPMENT SUBMISSION
3.	09/11/14	SCHEMATIC DESIGN SUBMISSION
2.	08/13/14	CONCEPT FLOOR PLANS
1.	08/08/14	AS-BUILT DRAWINGS

PEH ARCHITECTS
1319 Spruce Street Suite 207
Boulder, CO 80302
303-442-0408, fax: 303-447-1905
e-mail: peheinz@peharchitects.com

401 CHASE STREET
REHABILITATION

401 Chase Street, Black Hawk, CO 80422

SHEET TITLE
PLUMBING
PLAN

PROJECT: 2014.29
DATE: 07/31/14
DRAWN BY: PS
CHECKED BY: PS

SHEET NUMBER
P201

HVAC Specifications

1. Provide an Operation and Maintenance Manual at the end of Construction.
2. Provide a set of redlined drawings indicating all differences from the contract documents.
3. Provide balancing report at the end of the project.
4. Provide condensate drain lines from all condensate pans in equipment. Route to approved location.
5. All ducts and plenums shall be constructed in accordance with the applicable SMACNA duct manuals including gauge of metal, type of joint, reinforcing, geometry of the fittings, and support and hanging of the ductwork.
6. Round duct take-offs from rectangular ductwork shall utilize bell-mouth fittings with balancing damper.
7. Radius elbows with throat radius (measured at inside surface) equal to duct depth should be used wherever possible. Rectangular elbows are discouraged. If rectangular elbows are needed, they shall have single-wall turning vanes, with intermediate supports if the length of the vanes exceeds 36". Edges of the turning vanes shall be parallel with the sides of the elbow.
8. Provide flexible connections on all vibrating or rotating equipment.
9. Transitions in ductwork, for changing shapes and sizes, shall be made with angles not exceeding 15 degrees per side wherever possible.
10. All ductwork shall be sealed with sealant per SMACNA Standards.
11. Flexible duct is not allowed for the restroom exhaust or kitchen hood exhaust

Plumbing and Piping Specifications

1. Provide an Operation and Maintenance Manual at the end of Construction
2. Provide a set of redlined drawings indicating all differences from the contract documents.
3. Provide balancing report at the end of the project.
4. Isolation valves for hydronic systems shall be full port ball valves.
5. Provide unions and isolation valves at all equipment connections.
6. Install gas piping in accordance with NFPA Standard 54 and the International Fuel Gas Code.
7. Provide 1/2 inch automatic vent valves at high points of mains and risers.
8. Install piping so that it can be easily drained. Provide drain valves and drain lines from each piping low point, between two block valves, between block valves and backflow preventer discharge check valves, and from each item of equipment requiring drains.
9. Coordinate wiring responsibilities with Electrical Contractor and Temperature Controls Contractor.
10. All piping and plumbing systems shall be pressure tested prior to concealment.
11. Clean all closed piping systems with an alkaline cleaning product containing dispersants, detergent, and organic corrosion inhibitors. Provide sufficient cleaner to elevate the pH above 10.5. Circulate for 24 hours and, if a heating water system, heat the system water up to 140°-180°F. Following circulation, drain down and flush. Fill with chemicals as required.
12. Provide access doors to all equipment, valves, etc. that will require service or adjustment.
13. Piping shall be insulated as follows:
14. Pipe insulation shall be rigid, molded, non-combustible with a K-value of 0.23. Provide vapor retarder jacket.

PIPE INSULATION SCHEDULE

Minimum Pipe Insulation (inches)						
Fluid Design Operating Temperature Range (°F)	Mean Rating Temperature	Nominal Pipe Diameter (inches)				
		1 and less	1-1/4 to 2	2-1/2 to 4	5 and 6	8 and up
A. Heating Systems: Heating Water						
201-250	150	1.5	1.5	2.0	2.0	3.5
141-200	125	1.5	1.5	1.5	1.5	1.5
105-140	100	1.0	1.0	1.0	1.5	1.5
B. Domestic and Service Hot Water Systems including recirculation						
105 and Greater	100	1.0	1.0	1.5	1.5	1.5
C. Domestic Cold Water						
		1	1	1	1	1
D. Piping Exposed to Freezing						
		1-1/2	1-1/2	1-1/2	1-1/2	1-1/2

15. Domestic water piping shall be:
    1. Above grade:
       a. Type L hard-drawn copper tube with wrought-copper fittings and low liquidus/solidus non-lead, non-antimony solder with a shear strength equal to or greater than 10,000 psi. All-State "Aquasafe" or approved equal.
    2. Below grade:
       b. 2-1/2 inches and smaller: Type K soft-drawn copper tube with wrought-copper fittings and silver brazed non-lead, non-antimony solder.
16. Interior Soil and Waste and Vent piping shall be:
    1. Above grade:
       a. Galvanized steel pipe with cast-iron drainage fittings
       b. Service weight cast-iron soil pipe with No-Hub fittings
       c. DWV copper pipe and fittings.
       d. Schedule 40 ASTM D2665 polyvinyl chloride (PVC) with ASTM D2564 solvent welded socket fittings.
    2. Below grade:
       a. Service weight, cast-iron soil pipe with hub-and-spigot fittings with neoprene compression gaskets.
       b. Schedule 40 PVC with solid core.
17. Natural gas and LPG piping shall be:
    1. Interior, exposed or accessible:
       a. 2 inches and smaller:
          1) Pipe: Schedule 40, ASTM A120.
          2) Fittings: Threaded, malleable iron.
          3) Joint Seal: Rector seal or Teflon paste.
          4) Unions : Black malleable iron, ground joint, bronze to iron seat, 150 pound class, ANSI B2.1 and ASTM A197.
    2. Interior, concealed or in air plenums: All pipe and fittings shall be welded type.
    3. Below grade and outside of building footprint: Standard weight, black iron with all joints welded and wrapped per code, or approved PE pipe.
18. Equipment drain piping shall be:
    1. Type L copper with wrought copper fittings, 95/5 solder.
    2. Schedule 40 galvanized steel pipe with 150-pound malleable iron threaded fittings.
    3. Schedule 40 PVC pipe with solvent welded fittings.
19. Grade waste and vent inside of building with a uniform grade of not less than piping 1/8-inch per foot for all horizontal piping 4" in diameter or greater. All waste lines inside the building less than 4" in diameter shall be graded to not less than 1/4" per foot.
20. Provide cleanouts for sanitary systems. Cleanouts shall be full size except that maximum size shall be 4 inches. Install cleanouts full size at base of all sewer mains, at changes in direction of sewer mains, and at the ends of each horizontal run. Install cleanouts in horizontal piping for interior sewers at a maximum spacing of 50 feet for piping 3 inches or smaller and 100 feet for piping 4 inches or larger; and of a maximum spacing of 100 feet for exterior sewers. Install cleanouts 6 inches above the highest trap on the floor in the main vent of each group of fixtures and in vent stacks for isolated fixtures on each floor.
21. Assemble lavatory and sink wastes and traps with slip joints with lock nuts and rubber gaskets or with threaded joints on fixture side of trap. Do not use slip joints on sewer side of traps. Make sewer side connections with screwed trap nipples, compression fittings or solder joints.
22. The tubing for the"homeruns" to the fintube radiation to be with PEX-AL-PEX, type A with aluminum interior oxygen barrier as made by Uponor. Insulate piping.

Seward Mechanical Systems

Design – Engineering

Paul D. Seward, P.E.

801 Main Street
Suite 310
Louisville, Colorado
80027

Phone: 303.926.9245
Fax: 303.926.9241
Email: seward@steam-engine.com

Pro.#:14041

NO.	DATE	REVISION
5.	11/24/14	CONSTRUCTION DOCUMENT SUBMISSION
4.	10/20/14	DESIGN DEVELOPMENT SUBMISSION
3.	09/11/14	SCHEMATIC DESIGN SUBMISSION
2.	08/13/14	CONCEPT FLOOR PLANS
1.	08/08/14	AS-BUILT DRAWINGS

PEH ARCHITECTS
1319 Spruce Street Suite 207
Boulder, CO 80302
303-442-0408, fax: 303-447-1905
e-mail: peheinz@peharchitects.com

401 CHASE STREET
REHABILITATION

401 Chase Street, Black Hawk, CO 80422

SHEET TITLE

MECHANICAL SPECS

PROJECT: 2014.29
DATE: 07/31/14
DRAWN BY: PS
CHECKED BY: PS

SHEET NUMBER

MP400

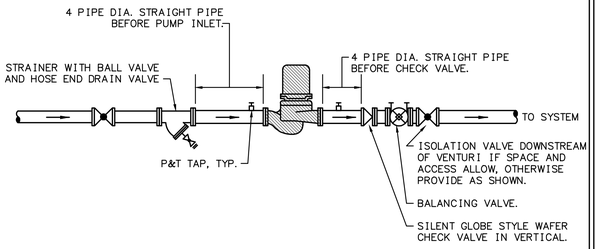

IN-LINE PUMP DETAIL
NOT TO SCALE

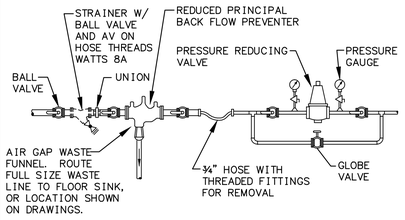

NOTES:
1. MOUNT THE RP DEVICE A MINIMUM OF 12" AFF.
2. PROVIDE A PERMANENT PLATFORM FOR INSTALLATIONS HIGHER THAT 60" AFF.
3. WHEN THE TEST COCKS FACE A WALL OR SIMILAR OBSTRUCTION, PROVIDE A MINIMUM OF 24" CLEARANCE TO THE WALL.
4. WHEN THE TEST COCKS FACE AWAY FROM A WALL, PROVIDE A MINIMUM OF 12" CLEARANCE TO THE WALL.
5. PROVIDE 36" CLEAR SPACE IN FRONT OF THE ASSEMBLY.

CLOSED SYSTEM WATER MAKE-UP DETAIL
SCALE: NTS

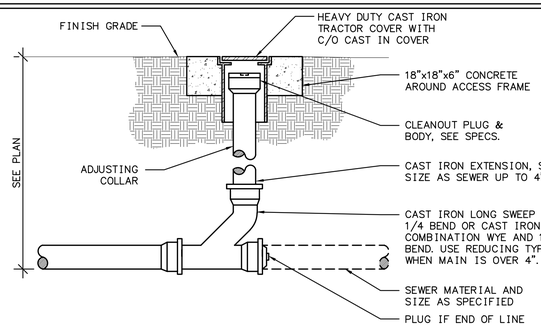

GRADE CLEANOUT DETAIL
NOT TO SCALE

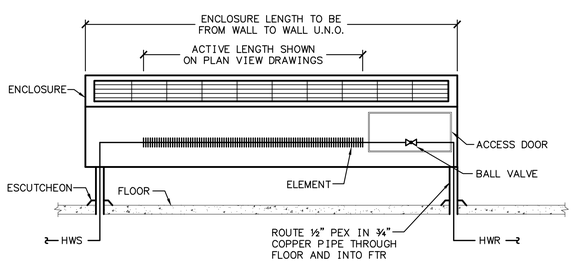

HOT WATER FINTUBE RADIATION PIPING DETAIL
NOT TO SCALE

PLUMBING FIXTURE SCHEDULE

CODE	DESCRIPTION	MANUFACTURER AND MODEL	SUPPLY FITTING	WASTE FITTING	NOTES
WC	FLOOR MOUNTED TANKTYPE WATER CLOSET	KOHLER CIMARRON K-11451			6, 9, 10
LAV	19" DIAMETER VITREOUS CHINA DROP IN LAVATORY	KOHLER BROOKLINE K-2202-4	DELTA 520-DST	50/50 POP-UP	1, 6
SHWR-1	HAND SHOWER	DELTA #55021	CLASSIC MONITOR 13 #T13020 TRIM		6, 7, 8
SHWR-2	FIXED SHOWER	DELTA #55021	DELTA 3-SETTING DIVERTOR VALVE TRIM #T11800 DELTA 16 SHOWER ARM #RP46870 AND DELTA SINGLE SETTING SHOWER HEAD #RP52382		6, 8, 11, 12
KS	18 GAUGE STAINLESS STEEL SELF RIMMING SINK	MOEN G181953	DELTA PALO 467-DST FAUCET AND INSINKERATOR INVOLVE H-VIEW-SS INSTANT HOT WATER DISPENSER	DELTA DISPOSAL AND FLANGE STOPPER #72030	2, 3, 4, 5, 6
WMB	WASHING MACHINE BOX	GUY GREY		2"	
FD	FLOOR DRAIN	JOSAM 30002-A			
FPHB	FREEZE PROOF HOSE BIBB	WOODFORD 67	3/4"		

NOTES:
1. WHITE COLOR
2. 3-HOLE FAUCET
3. 4-HOLE DRILLING IN SINK
4. PROVIDE INSINKERATOR EVOLUTION ESSENTIAL GARBAGE DISPOSER, ¾ HP
5. 115V, 750 WATTS WITH GROUNDED 3-PRONG PLUG
6. POLISHED CHROME
7. PROVIDE #50560 WALL ELBOW
8. PROVIDE MULTICHOICE UNIVERSAL ROUGH-IN VALVE
9. 1.28 GALLON FLUSH
10. ELONGATED BOWL
11. PROVIDE R11000 DIVERTER ROUGH-IN
12. PROVIDE DELTA SHOWER FLANGE #RP065

EXPANSION TANK SCHEDULE

CODE	MANUFACTURER AND MODEL	SYSTEM SERVED	TYPE	SYSTEM CONTENT GAL.	MIN. FILL PRESS PSIG	MAX. OPER. PRESS PSIG	AVG. WATER TEMP.	ACCEPT. VOL. GAL.	MIN. TANK VOL. GAL.	NOTES
ET-1	AMTROL ST-5-C	HEATING WATER	BLADDER	20	20	80	140	.9	2.1	
ET-2	AMTROL 101-1	DOMESTIC HOT WATER	BLADDER	17.9	5	30	110	.4	2.0	

FAN SCHEDULE

CODE	MANUFACTURER AND MODEL	SERVICE	ARRANGEMENT	CFM	ALT.	TSP	RPM	DRIVE	CURB	ISO	W	HP	ELECTRICAL	NOTES
EF-1	PANASONIC WHISPER GREEN FV-11VK3	BATHROOM	IN-LINE CABINET	110	8540	3/8"	1050	DIRECT	NO	NO	77		115/1ø	1, 2
EF-2	FANTECH HP 175	RADON	IN-LINE	91	8540	0.75		DIRECT	NO	NO	50		115/1ø	1, 2
EF-3	FANTECH HP 2133	CRAWLSPACE VENTILATION	IN-LINE	68	8540	.5		DIRECT	NO	NO	20		115/1ø	1, 2

NOTES:
1. PROVIDE WEATHER CAP WITH UNIT.
2. PROVIDE BACKDRAFT DAMPER.

BOILER SCHEDULE

CODE	MANUFACTURER AND MODEL	TYPE	SERVICE	EFFICIENCY	OPER. ELEV.	S.L. INPUT MBH	OUTPUT MBH OR LB/HR	BURNER TYPE	FUEL TYPE	FLUE OUTLET	RATED PRESS.	HP	ELECTRICAL	OPER. WEIGHT	NOTES
B-1	TRIANGLE TUBE PRESTIGE EXCELLENCE PE-110	CONDENSING	HOUSE	95%	8540	110	82.1		NAT GAS	3"	30		120V	190	1, 2

NOTES:
1. WITH 14 GALLON DOMESTIC WATER TANK
2. 25% PROPYLENE GLYCOL

PUMP SCHEDULE

CODE	MANUFACTURER AND MODEL	TYPE	SERVICE	GPM	TDH FEET	IMP. DIA.	RPM	HP	WATTS	ELECTRICAL	NOTES
P-1		SYSTEM LUBRICATED	BOILER PUMP								2, 3
P-2	GRUNDFOS ALPHA	SYSTEM LUBRICATED	HEATING CIRCULATION	6.0	10						1, 2

NOTES:
1. PROVIDE VARIABLE FREQUENCY DRIVE.
2. PROVIDE HIGH EFFICIENCY MOTOR.
3. PROVIDED WITH BOILER.

TOE SPACE HEATER SCHEDULE

CODE	MANUFACTURER AND MODEL	CFM	HEATING COIL					ELECTRICAL	NOTES
			BTU	EAT	EWT	GPM	WPD		
TSH-1	WHISPA III 5000	93	5000	65	105	1	0.4'	115/1ø	1, 2

NOTES:
1. TWO SPEED FAN.
2. ELECTRIC CORD AND PLUG.

FINNED TUBE RADIATION SCHEDULE

CODE	MANUFACTURER AND MODEL	CAPACITY BTUH/FT	LENGTH	WATER			ELEMENT				ENCLOSURE			NOTES
				EWT	LWT	GPM	ROWS	PIPE SIZE	FIN SIZE	FINS/FT	HEIGHT	DEPTH	CONFIGURATION	
FTR-1	SLANT FIN FINE LINE 30	510	8'	180	160	1	1	3/4	2-5/8 x 2-1/8	55	7-7/8	2-11/16	SLOPE TOP	1
FTR-2	SLANT FIN FINE LINE 30	510	6'	180	160	1	1	3/4	2-5/8 x 2-1/8	55	7-7/8	2-11/16	SLOPE TOP	1
FTR-3	SLANT FIN FINE LINE 30	510	9'	180	160	1	1	3/4	2-5/8 x 2-1/8	55	7-7/8	2-11/16	SLOPE TOP	1
FTR-4	SLANT FIN FINE LINE 30	510	4'	180	160	1	1	3/4	2-5/8 x 2-1/8	55	7-7/8	2-11/16	SLOPE TOP	1
FTR-5	SLANT FIN FINE LINE 30	510	6'	180	160	1	1	3/4	2-5/8 x 2-1/8	55	7-7/8	2-11/16	SLOPE TOP	1
FTR-6	SLANT FIN FINE LINE 30	510	2'	180	160	1	1	3/4	2-5/8 x 2-1/8	55	7-7/8	2-11/16	SLOPE TOP	1

NOTES:
1. PROVIDE DAMPER.
2. FINTUBE COVERS TO BE WHITE.

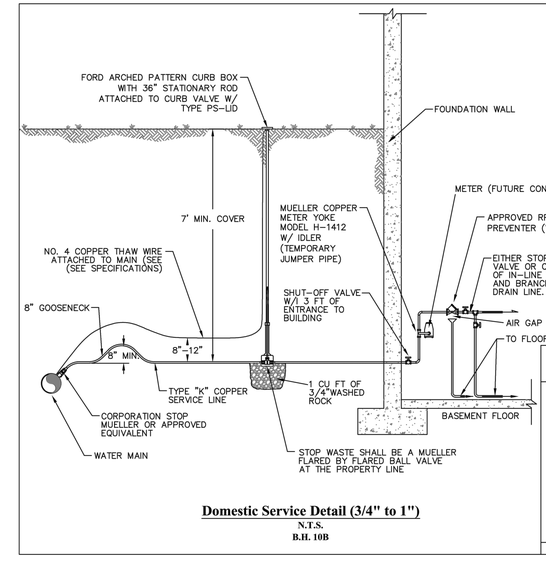

Domestic Service Detail (3/4" to 1")
N.T.S.
B.H. 10B

Water Standards Domestic Service Detail

BLACK HAWK

DATE: 05/02/13 | SHEET 10b OF 19

Seward Mechanical Systems
Design – Engineering
Paul D. Seward, P.E.
801 Main Street
Suite 310
Louisville, Colorado
80027
Phone: 303.926.9245
Fax: 303.926.9241
Email: seward@steam-engine.com
Proj#: 14041

NO.	DATE	REVISION
5.	11/24/14	CONSTRUCTION DOCUMENT SUBMISSION
4.	10/20/14	DESIGN DEVELOPMENT SUBMISSION
3.	09/11/14	SCHEMATIC DESIGN SUBMISSION
2.	08/13/14	CONCEPT FLOOR PLANS
1.	08/08/14	AS-BUILT DRAWINGS

PEH ARCHITECTS
1319 Spruce Street Suite 207
Boulder, CO 80302
303-442-0408, fax: 303-447-1905
e-mail: peheinz@peharchitects.com

401 CHASE STREET REHABILITATION

401 Chase Street, Black Hawk, CO 80422

SHEET TITLE
MECHANICAL DETAILS AND SCHEDULES

PROJECT: 2014.29
DATE: 07/31/14
DRAWN BY: PS
CHECKED BY: PS

SHEET NUMBER
MP401

SEQUENCES OF OPERATION

A. BOILER

1. MICROPROCESSOR-BASED MODULAR CONTROL PANEL SHALL SENSE SUPPLY WATER TEMPERATURE AND OUTDOOR AIR TEMPERATURE TO MONITOR AND CONTROL THE OPERATION OF THE BOILER. PROGRAMMABLE SET POINT, CONTROL BAND, AND RESET RATIO SHALL CONTROL THE RELATIONSHIP BETWEEN THE SUPPLY WATER TEMPERATURE AND THE OUTSIDE AIR TEMPERATURE.
2. ENABLE THE HEATING SYSTEM WHEN THE OUTSIDE AIR TEMPERATURE IS BELOW 55° F, (ADJUSTABLE), ON A CALL FOR HEAT FROM THE RADIANT HEAT, TOE SPACE HEATER OR DOMESTIC HOT WATER.
3. ENABLE THE BOILER CIRCULATION PUMP, P-1, ON A CALL FOR HEAT. PROVIDE OUTPUT TERMINALS (120V) FOR SYSTEM CIRCULATION STARTER RELAYS.
4. LOCK OUT THE FLAME UNTIL THERE IS A PROOF OF WATER FLOW THROUGH THE BOILER.
5. ENABLE THE HEATING WATER SUPPLY PUMP, P-2, WHEN THE BOILER CIRCULATION PUMP IS ENABLED.
6. RESET THE HEATING WATER SUPPLY TEMPERATURE BASED ON OUTSIDE AIR TEMPERATURE AS FOLLOWS:

OAT	HWS
55	85
-10	180

B. FINTUBE RADIATION SYSTEM
1. LOCAL THERMOSTATS SHALL OPEN AND CLOSE ZONE VALVES.

C. DOMESTIC WATER SYSTEM

1. THE DOMESTIC WATER SYSTEM SHALL HAVE PRIORITY OVER THE FINTUBE RADIATION HEAT SYSTEM.
2. UPON A CALL FOR HEAT AS SENSED BY THE SENSOR LOCATED WITHIN THE INDIRECT WATER HEATER.
a. ENABLE THE BOILER AS INDICATED ABOVE.
b. THE OUTSIDE AIR RESET SCHEDULE SHALL BE OVERRIDDEN AND THE BOILER SHALL FIRE AT 180° F.
c. DISABLE THE FINTUBE RADIATION PUMP P-2, IF ON.

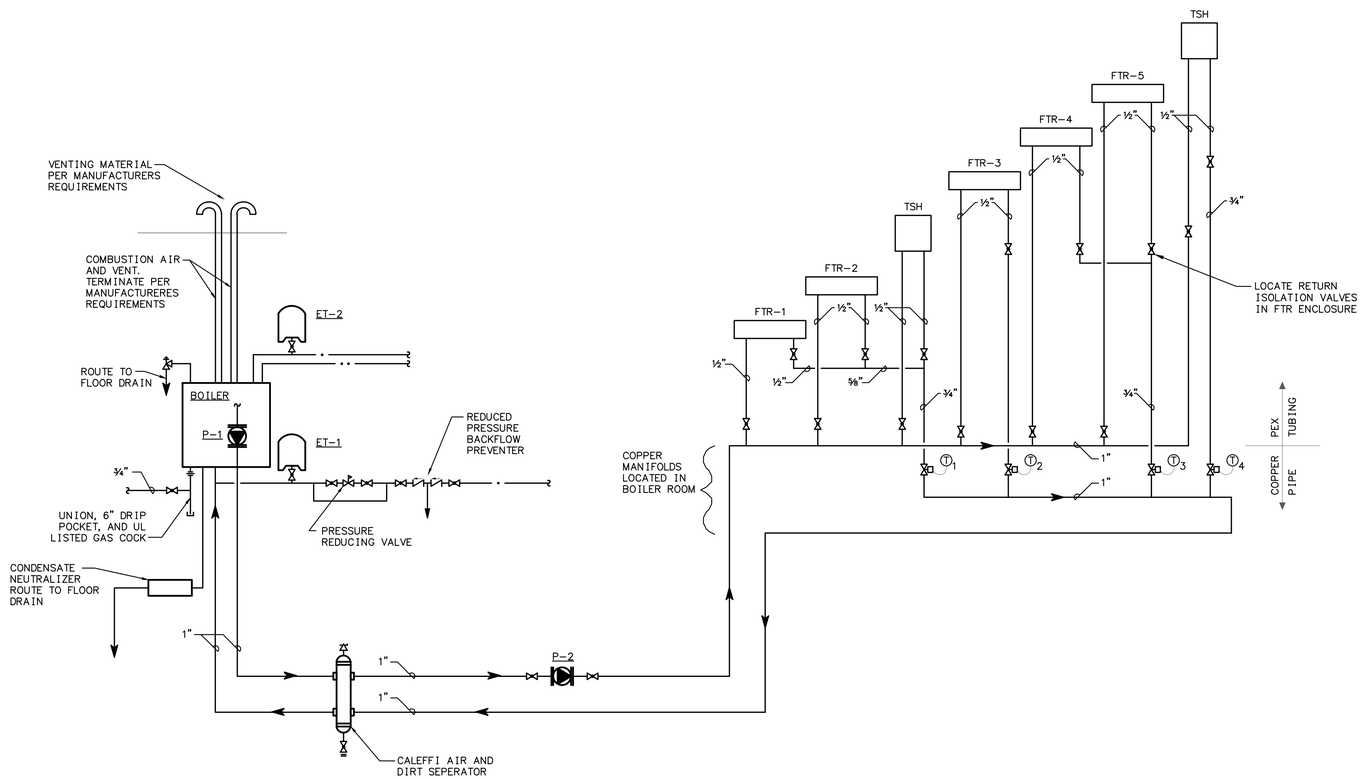

Seward Mechanical Systems

Design – Engineering

Paul D. Seward, P.E.

801 Main Street
Suite 310
Louisville, Colorado
80027

Phone: 303.926.9245
Fax: 303.926.9241
Email: seward@steam-engine.com

Proj#: 14041

NO.	DATE	REVISION
5.	11/24/14	CONSTRUCTION DOCUMENT SUBMISSION
4.	10/20/14	DESIGN DEVELOPMENT SUBMISSION
3.	09/11/14	SCHEMATIC DESIGN SUBMISSION
2.	08/13/14	CONCEPT FLOOR PLANS
1.	08/08/14	AS-BUILT DRAWINGS

PEH ARCHITECTS
1319 Spruce Street Suite 207
Boulder, CO 80302
303-442-0408, fax: 303-447-1905
e-mail: peheinz@peharchitects.com

401 CHASE STREET REHABILITATION

401 Chase Street, Black Hawk, CO 80422

SHEET TITLE

MECHANICAL PIPING DIAGRAM

PROJECT:	2014.29
DATE:	07/31/14
DRAWN BY:	PS
CHECKED BY:	PS

SHEET NUMBER

MP402

ELECTRICAL LEGEND

SYMBOL	DESCRIPTION
LIGHTING	
a	SPST WALL SWITCH, +48" UNLESS NOTED OTHERWISE, LETTER DENOTES SWITCHLEG.
3	3-WAY WALL SWITCH, +48" ABOVE FLOOR UNLESS NOTED OTHERWISE.
4	4-WAY WALL SWITCH, +48" ABOVE FLOOR UNLESS NOTED OTHERWISE.
D	SLIDE-TO-OFF DIMMER SWITCH, +48" UNLESS NOTED OTHERWISE.
OC	OCCUPANCY SENSOR WALL SWITCH, +48" ABOVE FLOOR UNLESS NOTED OTHERWISE.
(2)	MULTIPLE GANG SWITCH BANK, +48" ABOVE FLOOR UNLESS NOTED OTHERWISE.
	FLUORESCENT STRIP LIGHT, LENGTH AND MOUNTING PER FIXTURE SCHEDULE.
	SURFACE OR PENDANT FLUORESCENT FIXTURE, LENGTH/MOUNTING PER FIXTURE SCHEDULE.
	RECESSED GRID MOUNTED FLUORESCENT FIXTURE. SIZE PER FIXTURE SCHEDULE.
	RECESSED GYP. MOUNTED FLUORESCENT FIXTURE. SIZE PER FIXTURE SCHEDULE.
	RECESSED DOWNLIGHT FIXTURE, TYPE AND SIZE PER FIXTURE SCHEDULE.
	RECESSED WALLWASH FIXTURE, TYPE AND SIZE PER FIXTURE SCHEDULE.
	SURFACE OR PENDANT MOUNTED FIXTURE, TYPE AND SIZE PER FIXTURE SCHEDULE.
K	KEYLESS LAMP HOLDER WITH 100W A-19 LAMP, UNLESS NOTED OTHERWISE.
	WALL MOUNTED FLUORESCENT FIXTURE, LENGTH AND MOUNTING PER FIXTURE SCHEDULE.
	WALL MOUNTED FIXTURE, TYPE AND MOUNTING PER FIXTURE SCHEDULE.
K	WALL MOUNTED KEYLESS LAMP HOLDER WITH 100W A-19 LAMP, UNLESS NOTED OTHERWISE.
	TRACK LIGHT FIXTURE, LENGTH AND MOUNTING PER FIXTURE SCHEDULE.
	PARKING LOT POLE MOUNTED FIXTURE, TYPE AND MOUNTING PER FIXTURE SCHEDULE.
	GRADE MOUNTED BOLLARD FIXTURE, TYPE AND MOUNTING PER FIXTURE SCHEDULE.
	SINGLE FACE EXIT SIGN, WITH ARROW AS SHOWN TYPE AND COLOR PER FIXTURE SCHEDULE.
	DOUBLE FACE EXIT SIGN, WITH ARROW AS SHOWN TYPE AND COLOR PER FIXTURE SCHEDULE.
POWER / TELECOMM.	
	DUPLEX RECEPTACLE, +15" UNLESS NOTED OTHERWISE.
	DOUBLE-DUPLEX RECEPTACLE, +15" UNLESS NOTED OTHERWISE.
	HALF SWITCHED DUPLEX RECEPTACLE, +15" UNLESS NOTED OTHERWISE.
	CEILING MOUNTED DUPLEX RECEPTACLE.
	CEILING MOUNTED DOUBLE-DUPLEX RECEPTACLE.
30A	SPECIAL RECEPTACLE, +15" UNLESS NOTED OTHERWISE.
	FLUSH FLOOR MOUNTED DUPLEX RECEPTACLE
	JUNCTION BOX, WALL MOUNTED AT +15" UNLESS NOTED OTHERWISE.
J	JUNCTION BOX ABOVE CEILING.
	VOICE/DATA JACK, +15" ABOVE FLOOR IN A 2 1/8"D x 4" SQ. BOX WITH A TRIPLE PORT PLATE (PHONE/DATA/BLANK) WITH CABLING PER GENERAL NOTES.
	CABLE OR SATELLITE OUTLET RECEPTACLE, +15" UNLESS NOTED OTHERWISE.
TO	FRACTIONAL HP THERMAL-OVERLOAD SWITCH.
x	MOTOR, SUBSCRIPT INDICATES HORSEPOWER.
30/3	DISCONNECT SWITCH, SIZE AND POLES AS SHOWN.
	PUSH-BUTTON CONTROL WITH 1/2"C. TO ACCESSIBLE CEILING.
	WEATHER-HEAD.
T	DRY-TYPE TRANSFORMER, SIZE AS NOTED.
	BRANCH CIRCUIT PANELBOARD, +66" TO TOP OF PANEL.
M	UTILITY METER.
CT	CT CABINET.
FIRE ALARM / SECURITY	
P	PHOTOELECTRIC SMOKE DETECTOR.
CO	CARBON MONOXIDE DETECTOR.
SB	120V/12V SMOKE DETECTOR WITH SOUNDER BASE (ALL DETECTORS TO BE INTERCONNECTED).
	WALL MOUNTED SMOKE DETECTOR, 6" BELOW CEILING..
CIRCUITING / TAGS	
	FLEX CONDUIT CONNECTION.
	CONDUIT, CONCEALED IN WALLS OR CEILING.
	CONDUIT, CONCEALED IN FLOOR.
E UG	CONDUIT, UNDERGROUND BURIED.
A-1,3,5	BRANCH CIRCUIT HOMERUN TO PANELBOARD, ARROWS INDICATES NUMBER OF CIRCUITS.
	NEUTRAL, HOT, SWITCH LEG & GROUND CONDUCTORS AND CONTROL PAIR; RESPECTIVELY
	CONDUIT STUB-UP
	CONDUIT STUB-DOWN
1	ELECTRICAL DETAIL NOTE REFERENCE.
EF-1	MECHANICAL EQUIPMENT REFERENCE.
1	FAULT CALCULATION REFERENCE.
AC	ABOVE COUNTER
CLG	CEILING MOUNTED
DN	STUB-DOWN
EX	EXISTING TO REMAIN
GFI	GROUND FAULT INTERRUPTER
NF	NON-FUSED
R	EXISTING TO BE REMOVED
REL	RELOCATED – PROVIDE ADDITIONAL CONDUIT AND WIRE AS REQUIRED.
S	SURFACE MOUNTED
U.N.O.	UNLESS NOTED OTHERWISE
UP	STUB-UP
WP	WEATHER-PROOF

NOTE:
–HEAVY LINE WEIGHT INDICATES NEW WORK.
–LIGHT LINE WEIGHT INDICATES EXISTING TO REMAIN.
–LIGHT DASHED LINE WEIGHT INDICATES EXISTING TO BE REMOVED.

SITE PLAN - ELECTRICAL

SCALE: 1" = 10' – 0"

GENERAL NOTES

1. PROVIDE ALL EQUIPMENT AND SERVICES NECESSARY TO INSTALL THE COMPLETE SYSTEMS DESCRIBED BY THE CONTRACT DOCUMENTS AND SPECIFIED BELOW. THE DRAWINGS ILLUSTRATE THE GENERAL DESIGN AND EXTENT OF THE PERFORMANCE REQUIRED. ALL DIMENSIONS AND LOCATIONS SHALL BE TAKEN FROM THE ARCHITECTURAL DRAWINGS.
2. COMPLY WITH ALL STATE AND LOCAL CODES, UTILITY COMPANY REGULATIONS, FIRE DEPARTMENT REQUIREMENTS AND THE LATEST EDITIONS OF THE NFPA CODES.
3. EQUIPMENT AND MATERIALS SHALL BE NEW, UL-LISTED FOR THE USE INTENDED, BE FREE FROM DAMAGE OR DEFECT AND SHALL BE INSTALLED PER THE MANUFACTURERS INSTRUCTIONS.
4. THE CONTRACTOR SHALL BE RESPONSIBLE FOR THE SUCCESSFUL OPERATION OF THE ELECTRICAL SYSTEMS FOR A PERIOD OF ONE YEAR FROM THE DATE OF FINAL ACCEPTANCE. PROVIDE OPERATING AND MAINTENANCE INSTRUCTIONS FOR ALL ELECTRICAL SYSTEMS.
5. SUPPORT CONDUIT AND EQUIPMENT FROM THE STRUCTURE TO PREVENT SAGGING, POCKETING, SWAYING AND VIBRATIONS.
6. PROVIDE SLEEVES AND INSERTS FOR ALL ELECTRICAL CONDUIT. SEAL ALL CONDUIT PENETRATIONS PASSING THROUGH FIRE RATED BARRIERS AND EXTERIOR WALLS WITH AN APPROVED MATERIAL TO MAINTAIN THE FIRE RATED INTEGRITY.
7. PROVIDE COMPLETE SYSTEMS OF CONDUCTORS AND RACEWAYS USING CONDUIT AND/OR CABLE ASSEMBLIES APPROPRIATE TO THE FUNCTION AND LOCATION AND SPECIFICALLY APPROVED BY THE NEC. CONDUCTORS MUST BE DERATED PER THE NEC. LOAD BALANCE THE ENTIRE SYSTEM TO WITHIN 15% PER PHASE. PROVIDE A COMPLETE GROUNDING SYSTEM IN ACCORDANCE WITH ARTICLE 250 OF THE NEC.
8. PROVIDE GALVANIZED STEEL OUTLET AND JUNCTION BOXES, EXCEPT WHERE OTHERWISE INDICATED. BOXES SHALL BE A MINIMUM OF 4" SQUARE OR OCTAGONAL WITH DEPTH AS REQUIRED. PROVIDE WEATHERPROOF TYPE CAST BOXES WITH GASKET AND CAST COVERPLATES FOR ALL WET LOCATIONS. THROUGH THE WALL BOXES ARE NOT PERMITTED. PROVIDE PLASTER OR TILE RINGS FOR ALL FLUSH OUTLETS INSTALLED WHERE REQUIRED.
9. ALL CONDUCTORS SHALL BE COPPER, RATED AT 600 VOLTS (STRANDED FOR NO. 8 AWG AND LARGER), WITH THE FOLLOWING INSULATION RATINGS: THHN, THWN, XHHW. THE CONDUCTORS SHALL BE APPLIED USING THE 75C RATING TABLE.
10. DO NOT INSTALL EXPOSED CONDUIT IN AREAS OPEN TO THE PUBLIC. EXPOSED RACEWAYS MUST BE WIREMOLD WHERE REQUIRED AND ONLY WHERE APPROVED BY THE ARCHITECT. RUN EXPOSED RACEWAYS PARALLEL TO AND AT RIGHT ANGLES WITH THE BUILDING LINES.
11. USE FLEXIBLE METALLIC CONDUIT FOR CONNECTIONS TO MOTORS, FIXTURES AND OR OTHER EQUIPMENT WHERE VIBRATION IS ENCOUNTERED. PROVIDE SEALTITE FLEXIBLE METALLIC CONDUIT IN WET AREAS.
12. PROVIDE A GROUND WIRE IN NON-METALLIC CONDUIT, ROMEX AND FLEXIBLE CONDUIT.
13. PROVIDE CIRCUIT BREAKER TYPE LOADCENTERS AS SCHEDULED ON THE DRAWINGS. BREAKERS SHALL BE FULL WIDTH, THERMAL MAGNETIC, PLUG-IN TYPE. PROVIDE MULTI-POLE BREAKERS WITH COMMON TRIP AND SINGLE OPERATING HANDLE. PROVIDE SEPARATE GROUND BUS. PROVIDE A TYPED DIRECTORY IN A DIRECTORY FRAME. INSTALL TRIMS AND DOORS WITH THE PRIMER COATS IN FINISHED AREAS. PROVIDE ONE SPARE ½" CONDUIT UP OR DOWN TO AN ACCESSILBE LOCATION FOR EACH 3 UNUSED POLES IN THE LOADCENTER. LOADCENTERS SHALL BE SQUARE D OR EQUAL.
14. PROVIDE BRANCH CIRCUITS, FEEDERS, JUNCTION BOXES, DISCONNECT SWITCHES, ETC. AS REQUIRED FOR A COMPLETE SYSTEM. MAKE POWER CONNECTIONS TO MOTORS AND CONTROLS FOR HEATING, VENTILATION, AIR CONDITIONING, PLUMBING AND OWNER FURNISHED EQUIPMENT AS REQURIED.
15. EXTERIOR LIGHTING FIXTURES, RACEWAYS, BALLASTS, EQUIPMENT, ETC. SHALL BE WEATHERPROOF AND SUITABLE FOR TEMPERATURES DOWN TO -20F.
16. VOICE/DATA/CABLE: PROVIDE A COMPLETE SYSTEM OF CABLING. E.C. SHALL BE RESPONSIBLE FOR ALL CAT5 VOICE/DATA WIRING AND RG6U TV CABLING INCLUDING ALL COVERPLATES, CONNECTORS AND TERMINATIONS (VOICE 4 PIN, DATA 8 PIN). FIELD VERIFY ALL OUTLET LOCATIONS WITH THE ARCHITECT OR OWNER INCLUDING THE MOUNTING HEIGHT.
17. SWITCHES SHALL BE INSTALLED A MINIMUM OF 5" CLEAR FROM DOOR JAMBS OR AS REQUIRED TO NOT INTERFERE WITH DOOR CASING. COORDINATE WITH ARCHITECTURAL DRAWINGS.
18. ALL JUNCTION BOXES SHALL BE METALLIC (NON-METALLIC NOT PERMITTED).

(NEW) PANEL "A"

MOUNTING: ☐ FLUSH ☑ SURFACE
NEMA RATING: ☐ 1 ☑ 3R
SERVICE ENTRANCE RATED: ☑
ISOLATED GROUND BUS: ☐

LOCATION: GARAGE

VOLTAGE: 120/240V-1PH-3W
A.I.C. RATING: 10,000
M.L.O.: 200 AMP
BUS SIZE: 200 AMP

BRANCH BREAKERS

NOTES	CD	DESCRIPTION	SIZE	P	CIR.	LEFT PHASE A	LEFT PHASE B	RIGHT PHASE A	RIGHT PHASE B	CIR.	SIZE	P	DESCRIPTION	CD	NOTES
		LIGHTS	20	1	1	-		-		2	50		RECEPT-RANGE		
		LIGHTS	20	1	3		-		-	4		2	-----		
		LIGHTS	20	1	5	-		-		6	20	1	RECEPT-KITCHEN		
		LIGHTS	20	1	7		-		-	8	20	1	RECEPT-KITCHEN		
1		RECEPTACLES	20	1	9	-		-		10	20	1	RECEPT-KITCHEN		
1		RECEPTACLES	20	1	11		-		-	12	20	1	RECEPT-KITCHEN		
1		RECEPTACLES	20	1	13	-		-		14	20	1	RECEPT-KITCHEN		
1		RECEPTACLES	20	1	15		-		-	16	20	1	RECEPT-KITCHEN		
1		RECEPTACLES	20	1	17	-		-		18	20	1	BOILER		
1		RECEPTACLES	20	1	19		-		-	20	20	1	SPARE		
		RECEPT-DRYER	30		21	-		-		22	20	1	SPARE		
		-----		2	23		-		-	24	20	1	SPARE		
		RECEPT-WASHER	20	1	25	-		-		26	20	1	SPARE		
		SPARE	20	1	27		-		-	28	20	1	SPARE		
		SPARE	20	1	29	-		-		30	20	1	SPARE		
		SPARE	20	1	31		-		-	32	20	1	SPARE		
		SPARE	20	1	33	-		-		34	20	1	SPARE		
		SPARE	20	1	35		-		-	36	20	1	SPARE		
		SPARE	20	1	37	-		-		38	20	1	SPARE		
		SPARE	20	1	39		-		-	40	20	1	SPARE		
		SPARE	20	1	41	-		-		42	20	1	SPARE		
						0	0	0	0						

0	0	Total Connected VA
	0	=Total Connected VA all Phases

NEC 220 LOAD CALCULATIONS

1. 3 VA PER SQUARE FOOT (756 SQ. FT.)	2268 VA
2. SPECIFIC USE RECEPTACLES:	
a. DISHWASHER/DISPOSAL	1176 VA
b. WASHER	1100 VA
c. DRYER	5760 VA
d. MICROWAVE	1200 VA
e. REFRIGERATOR	850 VA
f. RANGE	9600 VA
3. MECHANICAL EQUIPMENT	1176 VA
4. TOTAL CALCULATED LOAD:	**23130 VA**
	96 AMPS

NOTES
1. PROVIDE ARC-FAULT BREAKERS FOR ALL LIVING AREA CIRCUITS.
2
3

ALL SINGLE PHASE SHARED NEUTRAL CIRCUITS SHALL BE SUPPLIED WITH BREAKER HANDLE TIES PER NEC 240.4

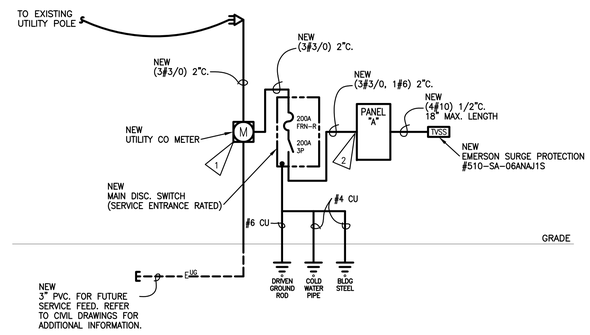

ELECTRICAL ONE-LINE DIAGRAM

SCALE: NONE

FAULT CURRENT CALCULATIONS

FAULT CURRENT AMPS AVAILABLE AT ASSUME EXISTING
100 KVA TRANSFORMER (120/240V-1P-3W) = 29,600 AMPS

FAULT #1 (LOCATION: AT UTILITY METER)

$$f = \frac{2}{1} \times \frac{125}{13.923} \times \frac{29,600}{240} = 2.215$$

$$M = \frac{1}{1 + 2.215} = 0.311$$

FAULT AVAILABLE = 29,600 x 0.311 = 9,206 AMPS (1)

FAULT #2 (LOCATION: AT NEW PANEL "A")

$$f = \frac{2}{1} \times \frac{10}{12.843} \times \frac{9,206}{240} = 0.060$$

$$M = \frac{1}{1 + 0.060} = 0.943$$

FAULT AVAILABLE = 9,206 x 0.943 = 8,681 AMPS (2)

NO.	DATE	REVISION
2.	11/14/14	CD SUBMISSION
1.	10/20/14	DD SUBMISSION

PEH ARCHITECTS
1319 Spruce Street Suite 207
Boulder, CO 80302
303-442-0408, fax: 303-447-1905
e-mail: peheinz@peharchitects.com

401 CHASE STREET
REHABILITATION

401 Chase Street, Black Hawk, CO 80422

JCN Engineering, Inc.
3281 Routt St., Wheat Ridge, CO 80033
(303) 239-0736

SHEET TITLE
ELECTRICAL SITE PLAN
ONE-LINE AND SCHEDULES

PROJECT: 1460
DATE: 11/14/14
DRAWN BY: DJK
CHECKED BY: JCN

SHEET NUMBER
E100
OF

Awaiting final fixture selection

FIXTURE SCHEDULE

KEY	LAMP(S)	DESCRIPTION	FINISH	VOLT	MOUNTING	MFR	CAT. NO.
A	-	EXTERIOR WALL SCONCE	-	120	-	-	-
B	-	EXTERIOR WALL SCONCE WITH MOTION DETECTOR	-	120	-	-	-
C	-	WALL SCONCE	-	120	-	-	-
D	-	CEILING FAN WITH LIGHT KIT	WHITE	120	-	-	-
E	-	PENDANT OVER BAR	-	120	-	-	-
F	-	48" SINGLE CIRCUIT TRACK - KITCHEN	-	120	-	-	-
G	-	22" LED UNDER CABINET LIGHT	-	120	UNDER CABINET	urbanlightsdenver.com	PRIORI 043T-22-DB
H	-	KEYLESS LAMP HOLDER	-	120	-	-	-
J	-	48" SINGLE CIRCUIT TRACK	-	120	-	-	-
K	-	VANITY LIGHT	-	120	-	-	-
L	-	24" SINGLE CIRCUIT TRACK	-	120	-	-	-

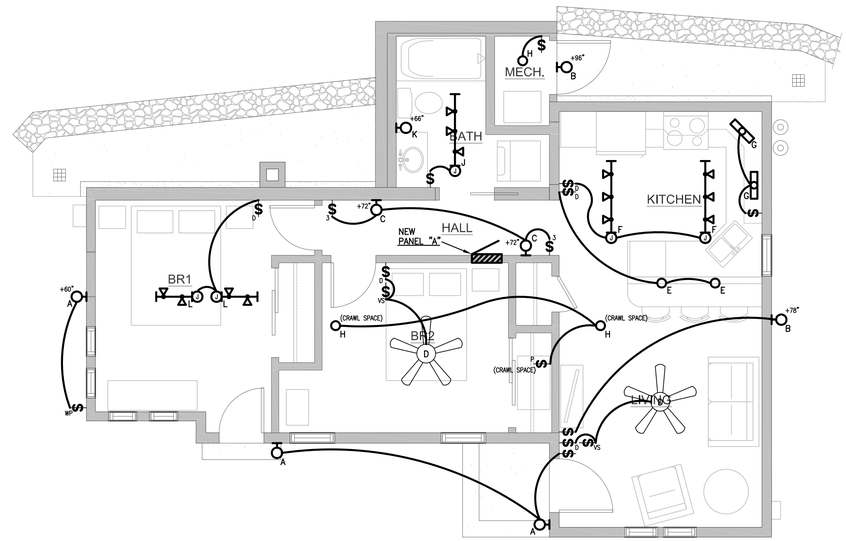

FLOOR PLAN - LIGHTING

SCALE: 1/4" = 1'-0"

GENERAL NOTES

1. NO SURFACE MOUNTED OR EXPOSED CONDUIT WILL BE ALLOWED EXCEPT IN THE BASEMENT.
2. REVIEW AND COORDINATE ALL THERMOSTAT WIRING WITH MECHANICAL CONTRACTOR.

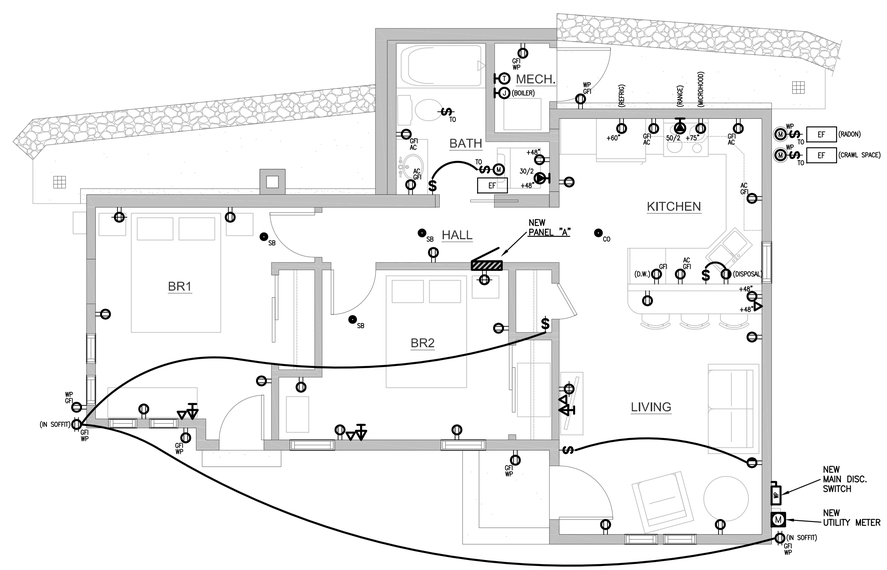

FLOOR PLAN - POWER

SCALE: 1/4" = 1'-0"

NO.	DATE	REVISION
2.	11/14/14	CD SUBMISSION
1.	10/20/14	DD SUBMISSION

PEH ARCHITECTS
1319 Spruce Street Suite 207
Boulder, CO 80302
303-442-0408, fax: 303-447-1905
e-mail: peheinz@peharchitects.com

401 CHASE STREET REHABILITATION

401 Chase Street, Black Hawk, CO 80422

SHEET TITLE

ELECTRICAL LIGHTING AND POWER PLANS, FIXTURE SCHED.

JCN Engineering, Inc.
3281 Routt St., Wheat Ridge, CO 80033
(303) 239-0736

PROJECT: 1460
DATE: 11/14/14
DRAWN BY: DJK
CHECKED BY: JCN

SHEET NUMBER
E200
OF

ATTACHMENT C

Project Manual, PEH Architects

Project Manual

401 Chase Street

Black Hawk, CO

11/24/14

Construction Document Set

P E H A R C H I T E C T S

1319 Spruce Street Suite 207 Boulder, CO 80302

phone: 303-442-0408 fax: 303-447-1905 email: peheinz@peharchitects.com

TABLE OF CONTENTS

Table of Contents
Section 0 - Conditions of the Contract 1
Section 1 - General Conditions Supplement 2
Section 2 - Site Work 5
Section 3 - Concrete 6
Section 4 - Masonry 7
Section 5 - Metals 8
Section 6 - Wood 9
Section 7 - Thermal & Moisture 11
Section 8 - Doors & Windows 13
Section 9 - Finishes 15
    Drywall 15
    Flooring, Wall Finish & Counters 15
    Painting 16
Section 10 - Specialties 18
Section 11 - Equipment 19
Section 12 - Furnishings 19
Section 13 - Special Construction 20
Section 14 - Conveying 20
Section 15 - Mechanical 20
Section 16 - Electrical 22
Appendix A: Shop Drawing Submittals Required 24
Appendix B: Interior Finishes and Products
Appendix C: Soils Report
Appendix D: Exterior Finishes Rendering

0 CONDITIONS OF THE CONTRACT

General Conditions and Modification to General Conditions:

These Outline Specifications are intended only to establish a scope and quality of work and are not intended to be complete detailed specifications. Where only one manufacturer is indicated, provide products of that manufacturer. “Equal” products may be submitted concurrently but shall not be submitted as a substitute without prior authorization.

It is implied and required that work which is not fully specified and/or detailed shall comply with applicable, recognized standards of the construction industry for the intended use of work, and shall be complete.

Where there is a conflict between the specifications and the drawings or within the specifications, the Contractor is to assume the higher quality, more expensive product or detail is to be used. It is the responsibility of the Contractor to ask for clarification from the Architect/Design Team.

Dimensions take precedence over scaled drawings. Large scale drawings take precedence over small scale drawings. Concrete and masonry dimensions are to face of concrete or masonry. Wood or steel stud construction is dimensioned to face of finished material unless noted otherwise. Do not scale drawings unless directed by the architect.

Before starting each portion of work, the contractor shall carefully study and compare the various drawings and other contract documents relative to that portion of work. The contractor shall field verify any existing condition related to that portion of work and shall observe any conditions at the site affecting it. These obligations are for the purpose of facilitating construction by the contractor and are not for the purpose of discovering errors, omissions, or inconsistencies in the contract documents; however, any errors, inconsistencies or omissions discovered by the contractor shall be reported to the architects as an RFI.

Any discrepancies found between the drawings and specifications, and site conditions, or any inconsistencies or ambiguities in the drawings or specifications shall be immediately reported to the owner, in writing, who will promptly resolve such inconsistencies or ambiguities in writing. Work done on unreported discrepancies, inconsistencies or ambiguities by the contractor shall be done at the contractor’s risk.

1 GENERAL CONDITIONS SUPPLEMENT

Summary of Work: (Project Description)

This project consists of a one-story historic structure to be finished as indicated on the drawings. Scope is defined in these Outline Specifications and Drawings dated *11/24/14*. The project is located at 401 Chase Street, Black Hawk, Colorado.

General Alternate Requirements:

General: The description for each alternate is recognized to be incomplete and abbreviated, but implies that each change must be complete for the scope of work affected. Refer to applicable sections and to applicable drawings for the specific requirements of the Owner, whether or not references are so noted in the description of each alternate. Modify surrounding work as required to integrate with the work of each alternate.

1. Add Alternate #1:

Mechanical and Electrical Coordination:

Contractor to carefully coordinate the interface between mechanical and electrical equipment. It shall be the responsibility of the Contractor to furnish, set in place, and wire for power and control.

Regulatory Requirements:

Contractor shall comply with the International Residential Code 2012, International Energy Conservation Code 2012 and all other applicable codes and ordinances, as well as secure all necessary permits and licenses.

Project Meetings:

The contractor shall schedule and administer a Pre-construction meeting, regular construction meetings and specially called meetings throughout the progress of the work. The contractor shall prepare and distribute meeting agenda and meeting minutes. Distribution of agenda and minutes shall be in pdf format. Distribution list shall include, but not be limited to, owner, owner’s rep, architect, and each representative of the design team. Paper hard-copies shall be provided at each meeting.

Quality Control:

All material and workmanship shall be subject to inspections, observation, examination and test by the Owner's Representative at any and all times.

Manufactured articles, materials, and equipment shall be applied, installed, connected, erected, cleaned and conditioned per manufacturer's written recommendations and/or trade association standards.

Temporary Utilities; Barriers and Controls:

The Contractor shall be responsible for furnishing all services and connections for water, electricity, and fuel for construction, and shall pay all charges entailed.

The contractor shall provide and pay for temporary services, utilities and facilities which will enable adequate construction progress and processes, and will accommodate other necessary activities at the project site. Services, utilities and facilities shall include but not be limited to water, telephone, electrical, gas, heat, ventilation, sanitary, fire extinguisher, site protection, enclosures, miscellaneous facilities and field office. The cost of providing and using temporary services shall be included in the contract sum. Any fee associated with connections, disconnects and relocations shall be included in the contract sum.

The Contractor shall provide barricades and temporary fences where needed. The construction site shall be cleaned and maintained clean to minimize the impact on surrounding property and rights of way.

Materials, equipment, fixtures or any other future components of the work shall be protected from the weather, stabilized at building temperature and moisture content or the like, as recommended by the manufacturer of the product.

Construction loads exceeding structural design loads shall not be placed upon the structures.

Substitutions and Product Options:

Cost saving alternates, substitutions, and proposals may be acceptable and should be submitted to the Architect for approval. If any alternative, substitute or proposal is found to be unacceptable, the Contractor shall provide the original product or detail at no additional cost.

Submittals:

The GC is to provide a Submittal Schedule upon commencement of construction. The schedule is to list all submittal items required per Appendix A, and to identify approximate dates of submittals. Submittals will be submitted in a timely manner so as to allow the Architect (10) days for review and approval.

GC shall review all submittals for general conformance and provide stamp/signature acknowledging review of documents. All documents (excluding physical samples) shall be provided via PDF format.

Work completed on submittal items prior to design team approval shall be done at the contractors risk.

Construction Photos:

GC to provide digital photos that document both electrical and mechanical rough-ins prior to installing insulation and drywall. GC is also to provide courtesy progress photos taken throughout the construction process. All photos are to burned onto CDs or jumpdrives, and to be organized in folders by day of photo taken. Two CDs or jumpdrives are to be provided, one for the design team and one for the owner.

Contract Closeout:

The Contractor shall provide both hard-copy and PDF format As-Built documentation, both hard-copy and PDF format Operation and Maintenance Manual (O&M Manual), and final lien wavers prior to application for final payment. In addition, the Contractor shall coordinate equipment start up and demonstrate/supply instructions for all equipment.

Cleaning:

At the completion of the work, remove all excess material, construction debris, tools and construction equipment from the site. The entire site and building areas shall be left clean and in ready to use condition, including but not limited to: visible labels removed, and all other exposed surfaces wiped, mopped or washed clean.

Operations and Maintenance:

The Contractor shall provide (1) copy of an O&M Manual and (1) PDF copy. The O&M Manual shall contain specification or product number and name for all appropriate finish materials, as used within the project, any and all warranty information, and any other pertinent information relating to this project. The hard-copy manual is to be 8.5”x11, 3 ring binder with items listed by CSI 16 divisions within. CSI divisions are to be tabbed and there is to be a complete table of contents at the front of the binder. The electronic PDF copy of the manual is to be burned onto a CD or jumpdrive, requiring the same documents included in the hard copy. PDFs of items are to be organized within folders labeled by CSI 16 divisions. A PDF of the complete table of contents is also required.

Selective Demolition:

All General and sub contractors used for demolition must be EPA Lead-Safe Certified.

Remove and dispose identified items described in Demolition Plan(s) and other contract drawings and documents, unless otherwise noted. Cap and identify utilities. Existing finished construction to remain shall be repaired, patched, and blended into new work. Remove all fasteners, hangers, clips, etc attached to or associated with demolished items and assemblies. Provide shoring and bracing as required for demolition work.

Plant Investment Fees:	Not Applicable. (N/A)
Taps:	See Civil Drawings.
Soils Report:	By Cesare, Inc., 8/15/2014 (Attached to Project Manual as Appendix C).
Building Permit:	Pick up by Contractor.

2 SITE WORK

Site Access:	Chase Street
Demolition:	Coordinate with demo plan and site plans
Grading-Excavating:	Excavate as required to install foundation improvement and provide 18” depth crawl space under house. Excavate/backfill site to install underground utilities. Per Civil Drawings. Bedrock removal is expected and is to be included within the contractor’s base bid. Bedrock removal shall be included for foundations, crawlspace, retaining walls, foundation drain, underground drain, radon piping, and domestic plumbing. Contractor to become familiar with Geotech report, and coordinate with drawings.
Drain Pipe:	See Civil Drawings
Extra Dirt:	Remove from site.
Top Soil:	Spread evenly on disturbed areas.
Landscaping:	Seed all disturbed grading with “multi-color high altitude seed mix” from Arkansas Valley Seed. Provide erosion control mat and temporary irrigation until completion of project. Erosion control mat to be 70% straw and 30% coconut fiber between polypropylene netting.
Irrigation System:	N/A
Site Fence:	See Section 5: Ornamental Guardrail and Section 5: Wire Metal Fencing
Retaining Walls:	See Section 4: Masonry
Tree Removal:	Remove or cut down trees as shown on the site plan. Removal shall include grinding out stump to a minimum of 12” below grade.

3 CONCRETE

Strength:	3000 psi.
Concrete:	Ready-mix.
Thickness:	4” U.N.O.
Expansion joints:	½” expansion filler material with plastic leveling screed peel-off caulk strip. Polyurethane non-sag self-leveling sealant. Provide at all junctions of slab and building.
Reinforcing:	Fibermesh or as noted in the drawings.
Finish:	Light broom exterior, steel trowel interior.
Protective coating:	N/A
Conc. Stain:	N/A
Walkways:	4” concrete with deep tooled control joints at 5’x5’ spacing (or as shown on plan) over 4” compacted road base. Provide expansion joints at all junctions of slab and building as noted above.
Driveway:	N/A
Exterior Patio:	See Walkways above.
Drainage Swale:	4” thick with broom finish over 4” compacted road base.
Concrete Stairs:	6” min. thickness, ½” bull nose, broom finish
Concrete Retaining Wall:	See structural plans and details.
Conc. Splash block:	12”w x 24”l x 3”h precast reinforced concrete splash block (Copeland Enterprises or equal).

4 MASONRY

Stone Retaining:	**Awaiting CoBH input:** Native stone, random sizing to maintain consistency of adjacent wall. Coursing to be roughly horizontal with irregular, rough, un-cut rubble of ___in. minimum to ___in. maximum in diameter. Match adjacent wall construction for stone color variation and stone coursing.
Stone Mortar:	ASTM Type M. Mortar joint to appear like stone is dry stack. Wall mortar to allow for free draining of water.
Foundation Stone Veneer:	**Awaiting CoBH input**: Native stone, roughly 3" thick. Coursing to be roughly horizontal with irregular, rough, un-cut rubble of ___in. minimum to ___in. maximum in face diameter. Provide reinforcing ties as detailed/specified by structural.
Stone Veneer Mortar:	ASTM Type S. Mortar joint to be flush with face of stone.
Brick Chimney:	Remove and replace deteriorated soft brick with like brick. Used replacement brick can be obtained at salvage yards such as Mendoza used Brick and Hillen Corp. Consider salvaging sound brick from cellar prior to demolition. Remove loose grout to a minimum depth of two times the joint width. Clean and moisten the joint prior to repointing. Ensure all repointing is well filled and compacted. Brick chimney at north will require deconstruction. Contractor to carefully remove bricks. Clean mortar from sound brick for reuse. Install new foundation per Structural. Reconstruct chimney to match historic height, plan dimensions, and aesthetic.
Brick Chimney Mortar:	ASTM Type O. Flush mortar joint with a starting proportion of 1: 2.5 :10 (Portland: hydrated lime: aggregate) by volume. It may be necessary to use white Portland cement to achieve an acceptable color match. Architect/Owner to approve color match prior to work.

5 METALS

Steel Items:	Primed 1 coat.
Foundation Bolts:	½” x 10”. ASTM A307 or A36, see structural drawings.
Post Stirrups:	1/8” steel.
Beam/Post Straps:	1/8” steel.
Connectors:	1/8” steel strapping or Simpson connectors.
Handrail:	1 ½” Diameter steel pipe with welded joints. Grind joints smooth. Powder coat black. Field touch up paint w/ black polyurethane paint. Provide vertical post or bracket at 6’-0” O.C. max.
Ornamental Guardrail:	See drawings for details, powder coated black (shop painted with field touch-ups using polyurethane paint). Grind all welds smooth. Panel at sloping grade to be installed on a rake to follow finished grade (top and bottom rail to follow slope of finished grade; posts to be vertical).
Wire Metal Fencing:	See drawings for details. All posts and horizontal rails to be weathering steel (Cor Ten). Grind all welds smooth. Wire fencing to be galvanized 11 ga., woven double loop, available at Hutchinson Western (303-287-8826). Wire tied at each steel post and at 24” O.C. top and bottom. Panel at sloping grade to be installed on a rake to follow finished grade (top and bottom rail to follow slope of finished grade; posts to be vertical).

6 WOOD

Studs:	Hem Fir, #2 or better, U.N.O. See Structural Plans.
Framing Lumber:	Hem Fir, #2 or better, U.N.O. See Structural Plans.
Roof Trusses:	N/A
Rafters:	Hem Fir, #2 or better, U.N.O. See Structural Plans.
Beams:	See Structural Plans.
Backing for Accessories:	2x6 U.N.O., backing shall be provided at 36” above tub/shower floor.
Wall Sheathing:	½” CDX plywood or 7/16” OSB - APA rated 24/16 exp 1, blocked and nailed U.N.O.
Roof Sheathing:	½” CDX plywood or 15/32” OSB, APA 32/16, nailed
Subfloor:	¾” T&G OSB, glue and screw install per structural.
Soffit:	3/8” x 4” double beadboard, smooth pine, painted. To be installed parallel to the wall face.
Fascia:	1x6, rough cedar, clear vertical grain, plowed for soffit.
Interior Trim:	All trim to be a poplar or solid wood (no finger joint material) paint grade. See drawings for profiles.
Base:	See “interior trim”
Casing:	See “interior trim”
Material:	See “interior trim”
Window:	See “interior trim”
Door:	See “interior trim”
Exterior Trim:	5/4” Rough cedar, clear vertical grain. Siding is not to project past the edge of the trim. Pre-prime all 6 sides and field cut prior to install.
Corner:	5/4”x4”.
Window:	5/4”x4”. For jamb and sill, include ripped 2”x4” sill extension w/ sloped top and drip edge kirf cut. See Elevation Drawings.
Door:	5/4”x4” for head and jamb.

Exterior Lap Siding:	Smooth cedar, clear vertical grain, bevel lap siding, 4” reveal. Pre-prime all 6 sides and field cuts prior to install. Fasteners to be concealed by consecutive installation of next lap board above.
Deck:	
Decking:	N/A
Fasteners:	N/A
Guardrail:	N/A
Exterior Stairs:	N/A
Stringer:	N/A
Treads:	N/A
Riser:	N/A
Handrail:	See Section 5: Metals
Balusters:	N/A
Interior Stairs/ Railing:	
Handrail:	N/A
Newel Post:	N/A
Baluster:	N/A
Top Rail:	N/A
Bottom Rail:	N/A
Closet Shelves:	¾” particle board with white melamine and PVC edge band on matching 1 x 2 wood ledger. Closets: Shelf @ 6’-0” A.F.F.
Closet Clothing Rod:	1 ½” diameter wood rod, provide middle bracket if span exceeds 4’-6”.
Built-in Cabinetry:	See plans for details.

7 THERMAL AND MOISTURE PROTECTION

Roofing:	
Type:	Asphalt, Owens Corning Oakridge Shingles, “Teak”
Warranty:	30 Year
Roofing Paper:	DuPont “Roofliner” underlayment
Ice + Water Shield:	Install Ice + Water Shield 3’-0” up from eave under roofing base.
Roof Accessories:	
Drip Edge:	28 gauge galvanized, painted.
Roof Vent:	N/A
Soffit Vent:	N/A
Gutters:	Galvanized 24 gage steel. Not painted. Hidden clips @ 18” O.C.
Size/Shape:	4” Half Round, with reverse bead (coordinate w/ clips).
Downspouts:	Galvanized 24 gage steel. Not painted. Clips @ 48” O.C. max.
Size/Shape:	3” circular.
Valley Flashing:	Lace asphalt shingles over valley. 3’-0” ice and water shield.
Drainage Plane at Concrete Retaining Wall:	Cosella Dorken, “DELTA-Drain 6000” drainage plane. 0.39” (10mm) depth polypropylene sheets. They are formed with dimples and a spunbond polypropylene fabric on one side. (Fabric to be on “dirt” side). Provide connection between drainage plain and perforated foundation drain.
Masonry Weep:	N/A
Insulation:	
Wall:	R-24 depth, 2lb. closed cell spray foam by Bayseal (R-6.9/Inch).
Under Roof:	R-49 depth, 2lb. closed cell spray foam by Bayseal (R-6.9/Inch). Provide intumescent paint in exposed attic areas as required by local code and per

	manufacturer's instructions. (Contractor's option to use closed cell spray foam with class 1 fire rating).
Flat Ceiling:	N/A
Conc. Floor:	N/A
Foundation:	R-15 depth, 2lb. closed cell spray foam by Bayseal(R-6.9/Inch). Provide intumescent paint in exposed crawl space areas as required by local code and per manufacturer's instructions. Provide 2' of R-15 F.G. batt insulation to lie on crawl space floor over vapor barrier, see drawings. (Contractor's option to use closed cell spray foam with class 1 fire rating).
Foam Insulation:	All electrical outlets and wire holes in plates/joists, windows and exterior doors (low expanding foam @ doors and windows).
Pipe Insulation:	See Mechanical Plans.
Vapor Barrier:	Class A - 15 mil, Stego Industries or equal. 6" overlap of sheet, 6" up foundation walls. Tape all seams with manufacturer's tape. Seal all penetrations with manufacture's tape.
Building Paper:	Tyvek "Home Wrap" vapor permeable infiltration barrier. Minimum 6" vertical overlap. Manufacturer approved tape at all seams and penetrations.
Skylights:	N/A
Asphaltic Waterproofing:	Bituminous Damproofing Provide 2 coats of an asphalt emulsion conforming to ASTM DI 187 to exterior vertical concrete surfaces of the foundation. Do not extend above grade.

8 DOORS AND WINDOWS

New Windows:

Brand:	Marvin
Type:	Ultimate Clad Double Hung/Awning
Interior:	Pine, factory applied prime. G.C. to paint per "Section 9c Interior Trim"
Exterior:	Factory applied AAMA 2605-05 finish. Color to be "Bronze."
Glass:	LOE-180-Argon, Double Pane. U-Value 0.31, Preserve protective film (high altitude). SHGC=0.49, VT=0.56, CR=55
Tempered Glass:	See Window Schedule on plans.
Egress:	See Window Schedule on plans.
Screens:	Aluminum full screen frame to match window finish. Charcoal fiberglass screen mesh.
Divided Lights:	N/A
Hardware:	Dark Bronze finish sash lock and sash lift.
Flashing:	Flash per manufacturer's instructions (See window details on plans).
Warranty:	Glazing - 20 year seal failure/10 year stress crack - Non-glazing components - 10 years

Additional Window Notes: N/A

Mirrors: (also see Section 10: Specialties for med cabinet)

Plate:	¼" frameless, polished edge, beveled
Size:	24x36
Location:	Bath

Doors:

Interior Passage Doors:	Simpson Primed Flat Panel. Redi-Prime Door series, Interior Panel #8055, with 3/8" hardboard flat panels. Painted.
Interior Door Hardware:	
Swing Door Hardware:	Kwikset, "Laurel" style knobsets, iron black finish (locking at bedroom doors).

Pocket Door Hardware:	Kwikset – brushed nickel finish. (Locking on hall/bath door only- Model #991-716). Pocket door frame and hardware to be Johnson 1500 Series.
Exterior Doors:	Simpson 4006 and custom sized Simpson 7117, Fir/Hemlock, ¾" insulated tempered glass. Painted.
Exterior Utility Room Door:	Thermatru "Traditions" TS214. Four panel, insulated steel door. Painted.
Exterior Screen Doors:	Chateau Shutter Company (303-761-4084), Style SC1L-2P, with interchangeable clear tempered glass and charcoal fiberglass screen insert, painted. See Door Schedule for sizing. Provide pneumatic door closer, thumb press or lever style door latch, door sweep, and "snubber" (chain attached to a spring to control how far the door can open).
Exterior Door Hardware:	Kwikset, "Avalon" style lockable handleset and deadbolt. Match key to all exterior handlesets and deadbolts. Iron black finish.
Hinges:	3 per door, finish to match interior handles.
Door Frames	Interior and exterior door frames to be solid, paint-grade wood, poplar or equal (No finger-joint material).
Weather seals:	Install/provide new at all new and existing exterior doors.
Thresholds:	Adjustable oak top sill with anodized aluminum exterior (Pemko or equal). Exterior finish to be anodized dark bronze aluminum. Provide aluminum sill extension to ensure full coverage at door threshold.
Door Stops:	Schlage Solid Door Stop #SC61Z619, finish to match door hardware. Provide at all pivot doors. Preferred mounting locations in order of most to least preferred: baseboard, floor, wall at knob, hinge mounted.
Exterior Storage Door:	N/A
Shed Doors:	N/A
Garage Doors:	N/A

9 FINISHES

A. DRYWALL/PLASTER

Material:	Gypsum wallboard-regular tapered edges throughout.
Finish Level:	Level 4 finish with texturing, provide paper board furring, plywood furring, and other accessories to ensure gyp board is plumb with the following tolerances: 1/16" per foot, 1/8" per 8 feet.
Wet Locations:	1/2" Dens-Sheild underlayment.
Thickness:	1/2" U.N.O.
Joint Treatment:	Butt Joint.
Corner Treatment:	1" Bullnose.
Attachment:	All drywall must be screwed.
Wall Finish:	Hand trowel finish w/ full mud coverage.
Ceiling Finishes:	Spray texture w/ light trowel.
No Finish Area:	N/A

B. FLOORING, WALL FINISH AND COUNTERS

Flooring:	Provide Schluter brushed aluminum transition strips at material changes.
Carpet 1:	N/A
Pad:	N/A
Wood 1:	N/A
Tile:	See Appendix B for selection(s) and location(s). Install on mortar bed over 1/8" waffle isolation mat (schluter-"ditra" or equal) over mortar bed. Follow manufacturer's instructions.
Grout:	See Appendix B for selection(s) and location(s). Grout lines to be as tight as recommended by tile manufacturer. Seal Grout with Mapei grout sealer. Provide color sample for approval by owner. Provide matching sanded caulk for expansion joint treatment at dissimilar material joints.

Sheet Vinyl:	See Appendix B for selection(s) and location(s). Provide full layer of ½" plywood underlayment to flush out finish floor height with floor tile. Install per manufacturer's recommendations.
Baseboard:	
Wood Base 1:	Poplar paint grade. See plans and Room Finish Schedule.
Tile:	N/A
Rubber:	N/A
Walls:	
Field Tile:	See Appendix B for selection(s) and location(s). Over ½" Dens-Shield underlayment. See architectural interior elevations for locations.
Accent Tile Band:	See Appendix B for selection(s) and location(s). Over ½" Dens-Shield underlayment. See architectural interior elevations for locations.
Tile Edge:	See Appendix B for selection(s) and location(s).
Grout:	See Appendix B for selection(s) and location(s). Grout lines to be as tight as recommended by tile manufacturer. Seal Grout with Mapei grout sealer. Provide color sample for approval by owner. Provide matching sanded caulk for expansion joint treatment at dissimilar material joints.
Tile Waterproofing:	N/A
Kitchen Backsplash:	See Appendix B for selection(s). Integral full ht. backsplash made from the same material as kitchen counters.
Grout:	N/A
Bath Backsplash:	See Appendix B for selection(s). Integral 4" backsplash made from the same material as bath counters.
Kitchen Counters:	See Appendix B for selection(s) and location(s).
Bath Counters:	See Appendix B for selection(s) and location(s).

C. PAINTING/STAINING

No Finish Areas:	N/A

Paint Primer:	Provide (1) coat of primer for all painted areas prior to applying the required listed number of finish coats of paint per each material section. Primer shall be of contrasting color to finish paint.
Exterior Wood:	3 coats satin acrylic latex over 1 coat primer. 3 color scheme. Exterior paint to be applied with either brush or roller only (do not spray). All paint by Sherwin Williams A-100 exterior latex A82 series or equal (coordinate w/ exterior rendering in Appendix). Body: SW 6440 Courtyard Trim + Soffit: SW 6819 Minuet White Accent: SW 6104 Kaffee
Deck Stain:	N/A
Breathable Waterproof Finish:	N/A
Conc. Stain:	See Section 3: Concrete, Concrete Retaining Wall
Exterior Metal:	Metals shall be powder coated in a climate controlled shop. Field touch-up paint at welds on-site with polyurethane paint, Sherwin Williams Hi-Solids Polyurethane paint over “Macropoxy 646” Fast cure epoxy primer.
Interior Drywall/Plaster:	2 coats acrylic latex, low VOC, over 1 coat primer. Sherwin Williams promar 200 zero VOC B31-2600 series or equal. Semi-gloss at kitchen, living, bath/laundry, and mech., all other areas to be satin (3 color options).
Paint:	See Appendix B and room finish schedule in architectural drawings for paint colors, finish, and location.
Interior Trim:	2 coats semi-gloss acrylic latex, low VOC, over 1 coat primer. Sherwin Williams promar 200 zero VOC B31-2600 series or equal. See Appendix B for color.
Interior Doors:	2 coats semi-gloss acrylic latex, low VOC, over 1 coat primer. Sherwin Williams promar 200 zero VOC B31-2600 series or equal. See Appendix B for color.
Caulking:	Silicone or Acrylic, all open joints, color of adjacent surface. Provide sanded caulk at tile areas.
MDF Products:	Prime all MDF products with low VOC acrylic latex
Construction Adhesives:	low VOC

10 SPECIALTIES

Crawl Space Vents:	N/A – Crawl space to be mechanically conditioned. See Mechanical Drawings.
House Numbers:	4” high, aged bronze finish. Schlage Classic House numbers.
Medicine Cabinets:	N/A
Fireplace:	
Model:	N/A
Brand:	N/A
Size:	N/A
Flue:	N/A
Attic Ladder:	N/A
Bathroom Accessories:	See Appendix B for selection(s). See interior elevations for mount height(s) and location.
Towel Ring:	See Appendix B.
Towel Rod:	See Appendix B.
Robe Hook:	See Appendix B.
Shower Curtain Rod:	See Appendix B.
Toilet Tissue Holder:	See Appendix B.

11 EQUIPMENT

Refrigerator:	Kenmore 33", 21.7 cu.ft. side-by-side, black. Model #41129. Provided by owner. Installation including any required installation kit or materials, by G.C.
Oven/Range:	Kenmore 30", 4.2 cu.ft. gas range with broil and serve drawer, black. Model #73239. Provided by owner. Installation including any required installation kit or materials, by G.C.
Dishwasher:	Kenmore 24" built-in, black. Model #13039. Provided by owner. Installation including any required installation kit or materials, by G.C.
Disposal:	See plumbing plans and schedule.
Microwave:	N/A
Microhood:	Kenmore 1.6 cu.ft. over-the-range microwave, black. Model #80329. Provided by owner. Installation including any required installation kit or materials, by G.C.
Hood:	N/A
Trash Compactor:	N/A
Washer/Dryer:	Kenmore 27" Laundry Center with gas dryer, white. Model #71532. Provided by owner. Installation including any required installation kit or materials, by G.C.

12 FURNISHINGS

Window Coverings:	N/A
Manufactured Cabinetry:	
Kitchen Cabinetry	See Appendix B for door and drawer style and finish. See Interior Elevations for location and sizes. Hardware: See Appendix B for selection(s). Hinges and door glides to be "no slam." Door overlay to be full overlay with concealed hinges.
Bath:	See Appendix B for door and drawer style and finish. See Interior Elevations for location and sizes. Hardware: See Appendix B for selection(s). Hinges and door glides to be "no slam." Door overlay to be full overlay with concealed hinges.

13 SPECIAL CONSTRUCTION (NO WORK.)

14 CONVEYING (NO WORK.)

15 MECHANICAL

Site Utilities:	See Civil Drawings.
Gas Service:	See Civil Drawings.
Gas Meter Location:	See Civil Drawings.
Pressure Reducing Valve:	See Civil Drawings.
Gas Piping:	Rework areas affected by renovation w/ galvanized piping. PE pipe at underground locations. Bury exposed pipe at retaining wall. Coord. w/ Civil Drawings.
Gas Devices:	Boiler, Range, Dryer, BBQ Grill.
Sewer Service:	See Civil Drawings.
House Sewer:	See Plumbing Drawings.
Water Supply:	See Civil Drawings.
Water Service:	See Civil Drawings.
Water Tap:	See Civil Drawings.
Water Meter:	See Plumbing Drawings.
Main Run Size:	See Civil drawings
Branch Size:	See Civil drawings
Hose Bib:	Frost proof. See Plumbing plans and schedule.
Sump Pump:	N/A
Floor Drains:	See mechanical plans.
Water Heater:	N/A
Make:	N/A
Model:	N/A
Type:	N/A

Fixtures:

Lavatories:	See plumbing plans and schedule.
Faucets:	See plumbing plans and schedule.
Controls:	See plumbing plans and schedule.
Kitchen Sink:	See plumbing plans and schedule.
Toilets:	See plumbing plans and schedule.
Shower:	See plumbing plans and schedule.
Bathtub:	See plumbing plans and schedule.
Shower Enclosure:	
Door:	N/A
Glazing:	N/A
Wall:	N/A
Bench:	N/A
Pan:	N/A

Mechanical System:	See Mechanical Plans.
Make:	See Mechanical Plans.
Supply Location:	See Mechanical Plans.
Zones:	See Mechanical Plans.
Controls:	See Mechanical Plans.
Programmable Thermostat:	See Mechanical Plans. With low-voltage or line voltage power (Battery power is not acceptable).
Unit Size:	See Mechanical Plans.
Floor Diffusers:	N/A
Duct Sizing:	N/A
Outside Air Intake:	See Mechanical Plans.
Make-up Air Intake:	See Mechanical Plans.
Air Conditioning:	N/A

16 ELECTRICAL

Service:	See Civil Drawings.
Meter Location:	See Civil Drawings.
Size:	See Electrical Plans.
Panel:	See Electrical Plans.
Wiring:	Romex.
Switches and Outlets:	All switches, outlets and cover plates to be white color, U.N.O. Alternate color at backsplash. Toggle.
Dimmers:	Slide level with Toggle On/Off.
TV Jacks/Data:	Relocate exposed cable wire within framing.
Type:	See Electrical Plans.
Location:	See Electrical Plans.
Wire and Install:	
Refrigerator:	Yes
Oven-Range:	Yes
Cook top:	N/A
Microwave:	N/A
Micro hood:	Yes
Hood:	N/A
Dishwasher:	Yes
Disposal:	Yes
Dryer:	Yes
Washer:	Yes
Electrical O.H. Door:	N/A
Bath Fans:	Low noise fan with backdraft damper. See Mechanical Plans.
Heat Lamp:	N/A
Air Conditioning:	N/A
Door Bell Location:	N/A

Telephone Outlets:	See Electrical Plans.
Location:	See Electrical Plans.
Smoke Detectors:	Hardwire and install per code, See Electrical Plan.
Carbon Monoxide Detector:	Hardwire and install per code, See Electrical Plan
Emergency Generator:	N/A
Light Fixtures:	See Appendix B Electrical Plan/Schedule.

END OF SPECIFICATIONS

APPENDIX A: SUBMITTAL TABLE

Spec. Section	Product or Material	Submittal Type (see below)
Div 2 Sitework	None	
Div 3 Concrete	Concrete Color	b, c
Div 4 Masonry	Stone masonry & mortar	c
	Brick masonry & mortar	c
Div 5 Metals	Ornamental Guardrail	a, b
	Wire Metal Fencing	a, b
Div 6 Wood	Interior trim- base & casing	b, c
	Exterior siding, trim, fascia & soffit	b, c
Div 7 Thermal/Moist.	Roofing	b, c
	Gutters & Downspouts	a, b, c
	Downspout adapter at grade	a, b
	Insulation	b
Div 8 Openings	Doors, frames & hardware	a, b
	Windows, frames & hardware	a, b
Div 9 Finishes	Flooring - all types (tile/vinyl/etc.)	b, c
	Wall tile	b, c
	Interior paint	b, c
	Exterior paint	b, c
	Kitchen & Bath counters & backsplashes	a, b, c
Div 10 Specialties	Bath Accessories	b
Div 11 Equipment	None	
Div 12 Furnishings	Manufactured Cabinetry & Pulls	a, b, c
Div 15 Plumb/Mech	Boiler	b
	Furnace	N/A
	Toilets	b
	Lavatories/Sinks & faucets	b
	Showers/Tubs & faucet/controls	b
Div 16 Electrical	Light fixtures	b

Legend

a. Shop drawings (PDF format)
b. Catalog data (PDF format)
c. Samples, colors
d. Mock-up

Submittals are not contract documents. Their purpose is to demonstrate the way by which the contractor proposes to conform to the information given and the design concept expressed in the contract documents for those portions of the work. Submittals that are not required will not be reviewed or returned by the design team. Submittals will be submitted in a timely manner so as to allow the architect (10) days for review and approval.

401 Chase Street
Interior Finishes and Products

Paint

Sheen notes:

Flat paint at all ceilings
Eggshell at all walls, unless noted otherwise
Semigloss at all painted wood trim and doors
Semigloss at Kitchen, Bath/Laundry and Mech

PT-0

Mfg:	Sherwin Williams
Color:	SW7007 Ceiling Bright White
Location:	*All painted wood trim and doors, all ceilings*

PT-1

Mfg:	Sherwin Williams
Color:	SW6224 Mountain Air
Location:	*Living room/kitchen walls unless noted otherwise*

PT-2

Mfg:	Sherwin Williams
Color:	SW6497 Open Air
Location:	*Living Room accent wall (west wall), Kitchen west wall, Hallway*

PT-3

Mfg:	Sherwin Williams
Color:	SW6956 Blue Refrain
Location:	*Bathroom and Bedroom 1*

PT-4

Mfg:	Sherwin Williams
Color:	SW6826 Whimsical White
Location:	*Bedroom 2*

Tile

TILE-1

Mfg:	Florida Tile
Style:	Porcelain Wood-look Tile
Color:	28092 Natura Charleston Brown
Size:	6"x24"
Installation:	Random (to look like wood planks), Install lengthwise East/West
Grout:	Custom Building Products #59 Saddle Brown; seal grout
Location:	*At floors throughout living room, kitchen, and hallway*

TILE-2

Mfg:	Arizona Tile
Style:	Touch
Color:	Snow
Sizes:	12"x12" square at floor, installed typically squares oriented with the room 12"x24" at walls, horizonatally, installed brick installation (except for decorative band TILE-3 specified below) Provide bullnose SBN 3"x12" at transition from tile to drywall (vertically along edge of bath enclosure, cut and align joints with field and accent tile joints)
Installation:	As recommended by manufacturer, grout lines as tight as recommended
Grout:	Custom Building Products #361 Bright White, note: seal grout
Location:	*At bathroom floors and walls, unless noted otherwise*

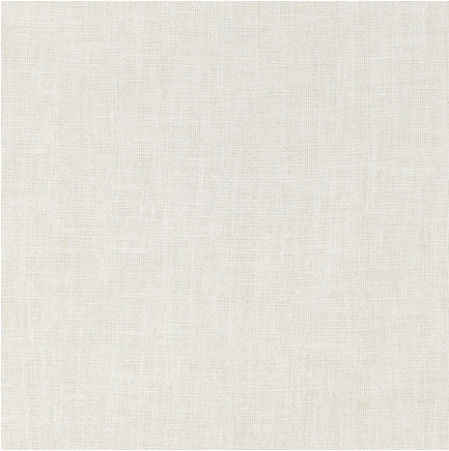

TILE-3

Mfg:	Arizona Tile
Style:	Glass Mosaic
Color:	Shimmer Abalone
Size:	1"x4" netted in 12" strip
	Install a 6" high course above 4th course of field tile (approx. 64"aff)
Installation:	As recommended by manufacturer
Grout:	Custom Building Products #361 Bright White, note: seal grout
Location:	*Shower decorative band*

LVT-1

Mfg:	Tandus/Centiva
Style:	Venue Wood (vinyl)
Color:	Taos VP-3605-U
Sizes:	6"x36" plank
Thickness:	20 mil wead layer
Installation:	Install per manufacturer's guidelines, install lengthwise East/West
Plank direction:	Refer to architectural drawings
Location:	*Bedrooms*

Cabinetry

QRTZ-1 Quartz Countertops

Mfg:	HanSstone Quartz
Style:	Magellan RM502
Thickness:	3cm
Finish:	Polished tops
Sink Mounting:	undermount
Location:	*Countertops throughout, unless noted otherwise. Kitchen to have integral full height backsplash in same material to underside of cabinets above. All restrooms shall have integral 4" backsplash made from same material*
Note:	Chiseled edge at counters, eased edge at backsplash

Cabinetry

CABS-1 Cabinetry

Description:	American Woodmark Cabinets (available at Home Depot) or equal. Cabinet boxes to be ½" engineered wood with veneer finish and corner cleats. Face frames to be ¾" solid wood to match doors. Doors and drawer faces to be solid wood. Drawers to be 5/8" hardwood 4-sided dovetail drawer box with full extension self-closing design hardware. Doors to have concealed hinges. Crown molding to be 3" ht. molded crown. Light valance/trim to be 1-1/2" ht. molded. Toekick to be ½" in a matching wood grain. (See interior elevations and floor plans for cabinetry design layout intent and additional cabinetry features and accessories). GC and cabinetry sub to coordinate availability of standard and custom requirements of cabinetry to meet the design intent.Fieldstone Cabinetry
Preferred Door Style:	Slab,flush panel, full overlay
Wood Effect:	Rustic
Location:	*At all cabinetry*
NOTE:	Illustrates concept only – finish to be determined within specific cabinet line selected

Indicates flush panel door style

Conceptual cabinetry color

PULLS-1 Cabinet Pulls

Mfg:	Richlieu
Style:	Village Expression - 5" Centers Square Edge Pull in Pewter RI-74227
Length:	3"
Note:	Provide (2) pulls at all extended width drawers
Location:	At all drawers

PULLS-2 Cabinet Pulls

Mfg:	Richlieu
Style:	Village Expression - Flat Faced Knob in Pewter (RI-74441)
Diameter:	1 1/8" Diameter
Location:	At all cabinet doors

Owner to choose preferred towel holder

This also serves as a TP holder

A METRA
841001-07
robe hook
*As shown:**
3.5"h x 2.75"w
x 2.25"proj
Dark smoke finish

B CURVED METRA
840014-07
towel holder
*As shown:**
14.5"w x 5.5"proj
Dark smoke finish
• Small bathroom tissue holder version:
8.5"w **840008**

C CURVED METRA
841016-07
towel holder
*As shown:**
21"w x 4.5"proj
Dark smoke finish
• Large version:
29"w **841024**

D METRA
841005-07
towel holder
*As shown:**
7"h x 5"w x 2.25"proj
Dark smoke finish

E STRAIGHT METRA
842016-07
towel holder
*As shown:**
17.5"w x 4"proj
Dark smoke finish
• Available in two larger sizes:
25.5"w **842024**
33.5"w **842032**

A
METRA

B
METRA

D
METRA

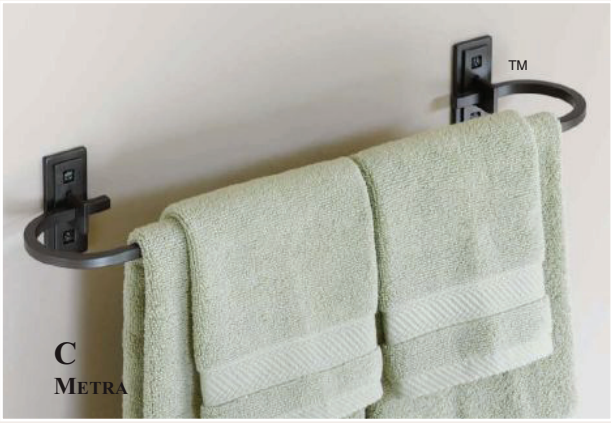

C
METRA

E
METRA

**See website and Specification Book for all available options.*

All designs and images © 1989-2014 Hubbardton Forge®. All rights reserved

401 Chase Street
Interior Finishes and Products

Electrical Devices

Color: White throughout unless noted otherwise, black at kitchen backsplash

Fixture A Outdoor Sconce

TransGlobe Lighting Energy Efficient 6 Light Outdoor Wall Lantern
Features:
Outdoor wall lantern
White frosted glass
UL listed for Wet locations
Eco friendly
Dark rust and powder coated finish
Energy Efficient Outdoor collection
Dimensions:
Overall: 10.25" H x 8" W x 9.5" D

401 Chase Street
Interior Finishes and Products

Fixture E Pendant light at island

Murray Feiss
Murray Feiss P1234
Finish: Rustic Iron
Urban Renewal 1 Light Mini Pendant with Clear Seeded Glass
- Height: 8"
- Width: 8"

Product comes with 180" cord, (3) 12" stems and (1) 6" stem

401 Chase Street
Interior Finishes and Products

bloom studio

Fixture C Hallway Sconce

Minka Lavery thru Lamps Plus
Minka Lavery Contemporary Iron 10" High Wall Sconce
Style # 26513

This stylish wall sconce by Minka Lavery combines traditional materials with a crisp modern design. Rich iron oxide finish frame encases an etched opal glass shade that emits a warmly flattering light.

Iron oxide finish.
Etched opal glass shade.
Takes one 100 watt bulb (not included).
Measures 6 5/8" wide, 10" high.
Extends 4" from the wall to make ADA compliant.

401 Chase Street
Interior Finishes and Products

Fixture K Bathroom Sconce (to the side of mirror)

Hubbardton Forge 207720
Finish: Mahogany
Erlenmeyer 1 Light Ambient Light Direct Wire Wall Light

Features:

All Hubbardton Forge products are made to order in Castleton, Vermont USA
Ultra secure mounting assembly ensures a sturdy installation
Hand made nature of this product makes no two fixtures identical

Lamping Technology:

Bulb Base - G9: A bi pin or 'bipin socket', G9 bulbs have a pin spread of 9 mm and are used mostly in 120V or 230V fixtures with halogen bulbs.

Compatible Bulb Types: G9 Bulb base uses primarily a Halogen bulb but is also available as Fluorescent, LED, and Xenon / Krypton.

Specifications:

Number of Bulbs: 1
Bulb Base: G9
Bulb Type: Halogen
Bulb Included: Yes
Watts Per Bulb: 40
Height: 9.4"
Width: 4.5"
UL Listed: Yes
UL Rating: Damp Location

401 Chase Street
Interior Finishes and Products

Fixture D1 Living Room Ceiling Fan

UL rated for outdoor use, this Casa Vieja® ceiling fan will make your next outdoor gathering a refreshing and comfortable affair. Motor and light kit housing comes in a rust finish over a stamped steel housing. 3 speed, 172 x 17 motor with pull-chain operation. With independent fan light operation. Outdoor rated light kit takes one 60 watt bulb (included). Comes with a 6" downrod. Dual mountable. Suitable for both indoor and outdoor use.

Rust finish.
13 degree blade pitch.
52" blade span.
Lantern style light kit.
Light kit 9" height and 14" wide.
Takes one 60 watt bulb (included).
6" downrod included.
Fan height 16" ceiling to blade (with 6 " downrod).
Fan height 25.6" ceiling to bottom of light kit. (with 6" downrod).
Canopy 5.2" wide and 2.2" long.

401 Chase Street
Interior Finishes and Products

bloom studio

Fixture D2 Bedroom Ceiling Fan

Get simple sophistication with this great looking ceiling fan. The lines are smooth and graceful, and the styling is at home in a wide range of decors. This fan gets a rich oil-rubbed bronze finish with reversible dark walnut/oil rubbed bronze blades, complemented by a tea-stained glass light kit. A stylish and updated choice for home or office. From Casa Vieja®.

CASA Vieja

Oil-rubbed bronze motor finish.
Five reversible dark walnut/oil rubbed bronze blades.
42" blade span.
12 degree blade pitch.
Pull chain operation.
Tea-stained glass light kit.
Includes three 60 watt candelabra bulbs.
6" downrod included.
Fan height 12" ceiling to blade (with 6" downrod).
Fan height 20-1/2" ceiling to bottom of light kit (with 6" downrod).
Canopy 5" wide and 2-1/2" height.

Fixture F and L Track Lights (track/components specified by engineer)

PRODUCT OVERVIEW
Model # R718SC
Internet # 203826422
The Juno Trac-Lites Bell Track Light offers contemporary styling. It features deep light-source regression and a step baffle to reduce glare. This track light provides exceptional task and accent lighting when installed on the economical Juno Trac-Lites system.
Deep light-source regression combines with a spun-aluminum step baffle for superior glare control
90-degree vertical aiming capability and 358-degree rotation permit light-beam adjustment for virtually any task or accent lighting application
Die-cast aluminum housing and swivel arm are finished in satin chrome and offer both durability and style
Spring-loaded locking latch on mounting adapter provides secure attachment of fixture to track
Patented, embossed polarity arrow on bottom of mounting adapter assures proper electrical connection
Includes integral on/off switch
Aiming lock helps retain fixture position during bulb change
Uses 120-volt, 35-50 watt, PAR16, MR16, or GU10 bulb
Compatible with Juno Trac-Lites track systems
UL and CUL listed
MFG Brand Name: Juno

SINK SPECIFICATIONS

SILGRANIT®II
BLANCO DIAMOND™ EQUAL DOUBLE Undermount
Model 440182

FEATURED MODEL

440182 Equal Double, 9-1/2" bowl depths, CAFE BROWN

ADDITIONAL MODELS

440183 Equal Double, 9-1/2" bowl depths, METALLIC GRAY
440184 Equal Double, 9-1/2" bowl depths, ANTHRACITE
440185 Equal Double, 9-1/2" bowl depths, WHITE
440186 Equal Double, 9-1/2" bowl depths, BISCUIT
441223 Equal Double, 9-1/2" bowl depths, BISCOTTI
441286 Equal Double, 9-1/2" bowl depths, TRUFFLE
441470 Equal Double, 9-1/2" bowl depths, CINDER

FEATURES

- Required outside cabinet: 36"
- 80% solid granite
- Heat resistant up to 536°F
- Unsurpassed cleanability backed by industry leading 7 patents!
- Resistant to scratches, stains and all household acids and alkali solutions
- Template provided with approximate 1/8" reveal
- Undermount clips included
- Limited lifetime warranty

OPTIONAL ACCESSORIES

Sink Grids:	221008 (left), 221009 (right)
Colander:	440492

CODE/STANDARDS COMPLIANCE

ANSI Z124.6-97
IAPMO/UPC listed

WARRANTY

BLANCO'S SILGRANIT II Series sinks feature a LIMITED LIFETIME WARRANTY to be free of all manufacturing defects under normal use. See our complete warranty for details.

While BLANCO endeavors to provide accurate information, all dimensions are nominal, cannot be guaranteed, and are subject to change or cancellation. BLANCO assumes no responsibility for use of superseded or voided specifications.

JOB INFORMATION

Job Name: _____

Contact: _____

Date Specified: _____

Specifier: _____

Contractor: _____

Model 440182 shown

NOMINAL DIMENSIONS

OVERALL	CUTOUT SIZE	BOWL DEPTH LEFT	BOWL DEPTH RIGHT	DRAIN DIAMETER
32" x 19-1/4"	Template provided with approximate 1/8" reveal	9-1/2"	9-1/2"	3-1/2"

DXF cutout templates available on our website.

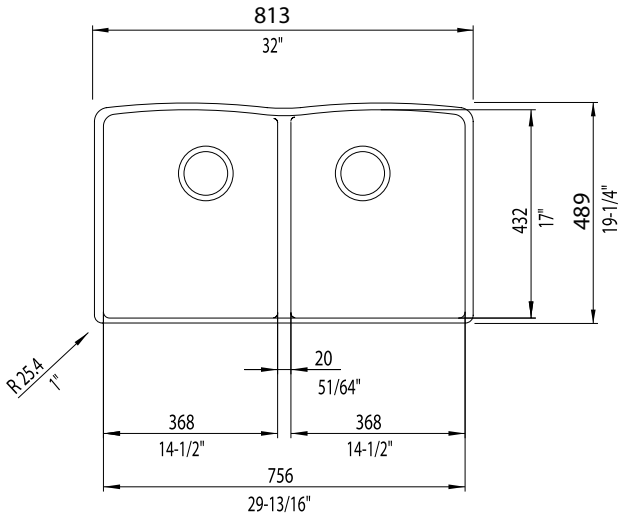

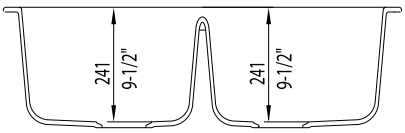

BLANCO AMERICA
800.451.5782
www.blancoamerica.com

© 2013 BLANCO AMERICA

Kingston Brass KS179 Tudor Widespread Kitchen Faucet with Brass Sprayer

By Kingston Brass

SKU #
11575664S

Price
$233.97

Finish
Satin Nickel

Collection
Tudor

Dimensions
Spout Reach: 8.5in
Spout Height: 6.25in
Hose Length: 48in
Height: 9in
Gallons per Minute: 2.2gal

Description

This widespread kitchen faucet, with its victorian spout and traditional handles is the perfect piece to finish your kitchen. Equipped with ceramic cartridge and manufactured from solid brass for long lasting performance. High quality brass construction Lifetime drip free ceramic cartridge Easy operation 1/4 turn metal lever handles Max 2.2 GPM/8.3 LPM water flow rate at 60 PSI (ASME Standard) Deck mount 8-in to 16-in widespread 4 hole installation with side sprayer Standard 1/2-in IPS connection

KB1601,2,3,4,5,6,8,9AL

Twin Handles 4" Centerset Lavatory Faucet With Retail Pop-Up

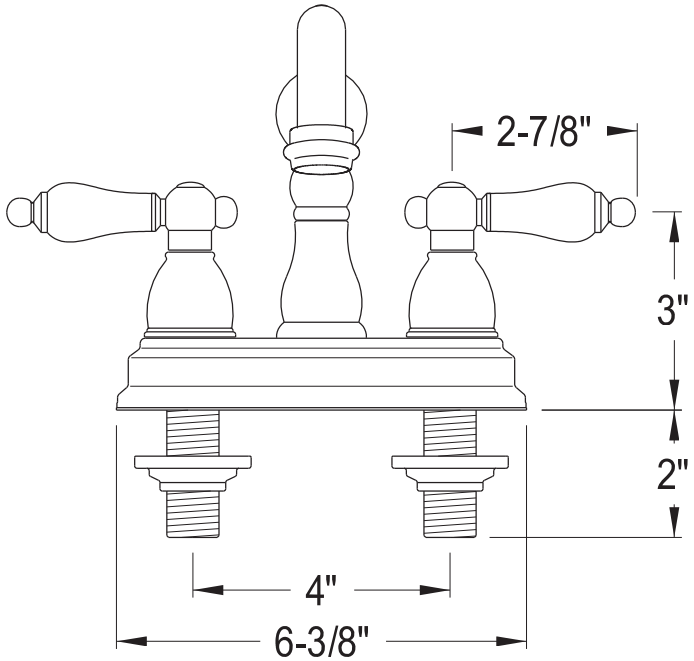

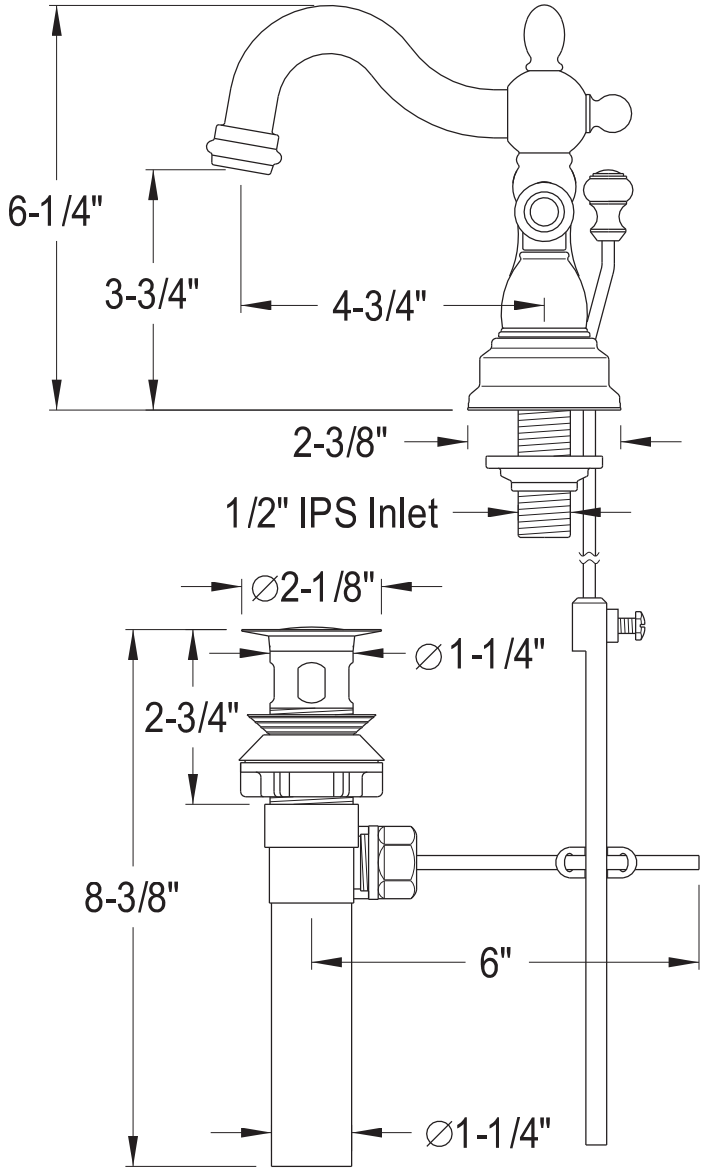

KINGSTON BRASS
THE TRADITION OF FINE BRASS

ESPAÑOL VIEW CART ORDER STATUS MY ACCOUNT

KINGSTON BRASS BATHROOM & KITCHEN FAUCETS. SINCE 1998

Select Language | HOME | BATHROOM | KITCHEN | PARTS | COLLECTIONS | NEW RELEASES | SPECIAL DEALS | NEWS | WHERE TO BUY | FAQS

Join Our Mailing List for More News and Information Email Address Send Recommend 13k search

KINGSTON BRASS
- Bathroom Faucet
- Shower
- Tub Faucet
- Clawfoot Tubs
- Modern Tubs
- Sinks
- Toilet
- Accessories
- Plumbing Kits

Home > Bathroom >

HERITAGE 4" CENTERSET bathroom Faucet with METAL LEVER HANDLE, Satin Nickel

List Price: $149.95

Quantity in Stock:(Out of Stock)

THIS ITEM MAY QUALIFY FOR FREE GROUND SHIPPING (EXCLUDES INTERNATIONAL ORDERS)

Availability:: Usually Ships in 1 to 2 Business Days

Product Code : KB1608AL

Qty: 1 ADD TO CART

+ADD TO WISH LIST

+ LARGER PHOTO

EMAIL A FRIEND

Like Share 0

Alternative Views:

Description | Measurement Chart | Explosion Chart/Installation Manual

This bathroom faucet features aesthetic colonial elegance with its graceful, round curves and Victorian style spout. This faucet has a deck mount setup and features a 4" centerset installation. The body is fabricated from solid brass for durability and long-lasting use. The color finish is made of satin nickel for its silvery, satin-like cast, as well as resisting scratches, corrosion and tarnishing. The spout has a reach of 4-3/4" and a height of 6-1/4". The handles allow for easy management of water volume and temperature. The faucet operates with a ceramic disc valve for droplet-free functionality with the water measured 2.2 GPM (8.3 LPM) and a 60 PSI maximum rate. An integrated removable aerator is inserted beneath the spout's head piece for conserving water flow. A pop-up drain in a matching finish is included. All mounting hardware is included and standard US plumbing connections are used. A 10-year limited warranty is provided to the original consumer.

Features

- Drip-free washerless cartridge system
- Matching pop-up drain included
- 4-3/4" spout reach
- 6" spout height
- 3-3/4" spout clearance

Replacement Parts

Duraseal Cartridge
List Price: $1.99
Add

drain
List Price: $14.95
Add

handle
List Price: $24.99
Add

erator
List Price: $8.95
Add

Share your knowledge of this product with other customers... Be the first to write a review

Browse for more products in the same category as this item:

Bathroom
Bathroom > Bathroom Faucet
Bathroom > Bathroom Faucet > Centerset Faucet > 4" Center Set
Bathroom > Bathroom Faucet > Centerset Faucet
Style > Classic
Collection > Heritage
Handles > Metal Lever
Finish / Color > Satin Nickel
Style
Collection
Finish / Color
Handles
Collections > Heritage
Collections
Cartridge
Cartridge > Washerless

My Recent History

- Vintage 4" bathroom Faucet with 50/50 Pop-Up $189.95 CLEAR
- TANK LEVER, Polished Brass PORCELAIN+OAK HANDLE $59.95 CLEAR
- VICTORIAN WIDESPREAD bathroom Faucet with OAK & PORCELAIN handle, Polished Brass $219.95 CLEAR
- VICTORIAN TOILET PAPER HOLDER, Polished Brass $74.95 CLEAR
- Robe Hook $56.95 CLEAR
- VICTORIAN 6" TOWEL RING, Polished Brass $56.95 CLEAR
- VICTORIAN 24" TOWEL BAR, Polished Brass $79.95 CLEAR
- 7 Piece Bathroom Accessory Set $320.00 CLEAR
- Bathroom Accessory Package $202.00 CLEAR

THE BOLD LOOK OF KOHLER

Have Questions?
Call 1-800-4KOHLER | Visit Us at Kohler.com

Iron Plains™ dual-mount bathroom sink

K-5400-0

Iron Plains™ dual-mount bathroom sink
K-5400-0
$300.00

Product Highlights

Color / Finish White

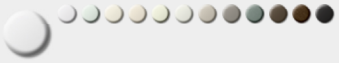

With its gently curved, organic shape, the Iron Plains sink combines distinctive style with the extreme durability, strength, and vintage soul of KOHLER enameled cast iron. Two installation options—drop-in or undermount—make this sink a flexible choice for a wide range of bathroom configurations.

Features

- Rectangular basin.
- No faucet holes; requires wall- or counter-mount faucet.
- Overflow drain.

Material

- KOHLER® enameled cast iron.

Installation

- Drop-in or undermount.

Dimensions
Height 6-5/16"
Length 18-9/16"
Width 15-3/4"

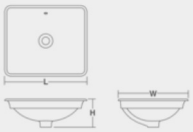

KOHLER CAST IRON LIFETIME LIMITED WARRANTY

ADA

Notes:

*All prices are Manufacturer's Suggested List Price in U.S. dollars. The price you pay at your local supply outlet may be different than the Manufacturer's Suggested List Price. These prices supersede previous prices and are subject to change without notice. These prices do not include shipping. Any sales tax applicable will be added to the prices.

Due to the differences in monitors, technical factors, and characteristics of some of our finishes, the colors shown here cannot be represented with all their true qualities. The color titles should only be considered a guide.

THE BOLD LOOK OF KOHLER.

Have Questions?
Call 1-800-4KOHLER | Visit Us at Kohler.com

color white

Wellworth® Classic two-piece round-front 1.28 gpf toilet with Class Five® flush technology and left-hand trip lever

K-3577-96

Wellworth® Classic two-piece round-front 1.28 gpf toilet with Class Five® flush technology and left-hand trip lever
K-3577-96
$296.40

Product Highlights

Color / Finish Biscuit

This water-saving version of the industry-leading Wellworth toilet brings graceful, streamlined design to the bath. At 1.28 gallons per flush, this high-efficiency toilet conserves up to 16,500 gallons of water per year compared to a 3.5-gallon toilet. Innovative technology ensures a high-performance flush for cleanliness. The round-front bowl conveniently fits smaller bath and powder rooms.

Features

- Two-piece toilet.
- Round-front bowl offers an ideal solution for smaller baths and powder rooms.
- 1.28 gallons per flush (gpf).
- Standard left-hand trip lever included.
- Seat and supply line not included.
- Combination consists of the K-4436 tank and the K-4197 bowl.
- Coordinates with other products in the Wellworth collection.

Technology

- Single-flush gravity uses the force of gravity and a precision-engineered tank, bowl, and trapway to create a strong siphon during flushing.
- Canister flush valve optimizes flush performance and resists warping and deterioration.
- Class Five® flushing technology offers plug- and leak-free performance, extraordinary flushing, and better rinsing power for a cleaner bowl.

Installation

- Standard 12-inch rough-in.

Water Conservation & Rebates

- WaterSense® toilets meet strict EPA flushing guidelines, including using at least 20 percent less water than 1.6-gallon toilets.
- Eligible for consumer rebates in some municipalities.

Included In:
Wellworth® Collection

Dimensions
Height 28-1/4"
Length 27-1/2"
Width 19-5/8"

Notes:

*All prices are Manufacturer's Suggested List Price in U.S. dollars. The price you pay at your local supply outlet may be different than the Manufacturer's Suggested List Price. These prices supersede previous prices and are subject to change without notice. These prices do not include shipping. Any sales tax applicable will be added to the prices.

Due to the differences in monitors, technical factors, and characteristics of some of our finishes, the colors shown here cannot be represented with all their true qualities. The color titles should only be considered a guide.

CESARE, INC.
Geotechnical Engineers & Construction Materials Consultants

GEOTECHNICAL STUDY

401 Chase Street
Black Hawk, Colorado

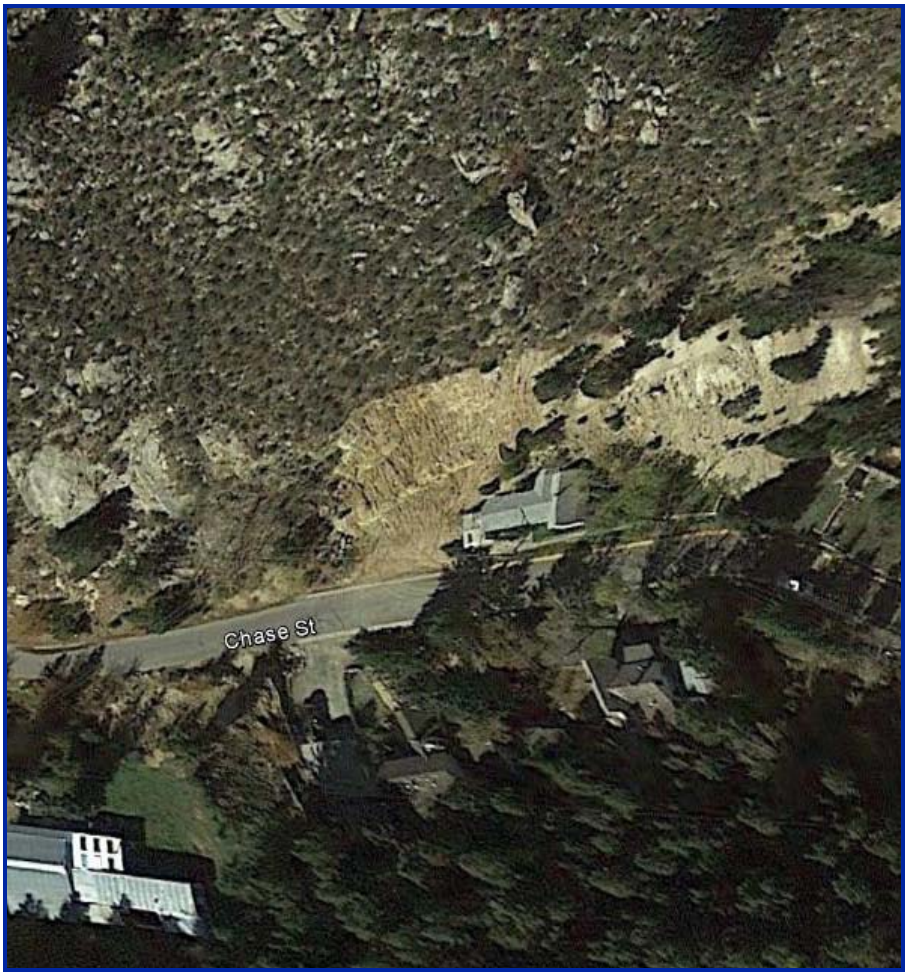

Report Prepared for:

Ms. Cynthia L. Linker
City of Black Hawk
211 Church Street
Black Hawk, CO 80422

Project No. 14.173.A
August 15, 2014

7108 South Alton Way, Building B • Centennial, Colorado 80112 • www.cesareinc.com
Phone 303-220-0300 • Fax 303-220-0442

CESARE, INC.
Geotechnical Engineers & Construction Materials Consultants

GEOTECHNICAL STUDY
401 Chase Street
Black Hawk, Colorado

Report Prepared for:

Ms. Cynthia L. Linker
City of Black Hawk
211 Church Street
Black Hawk, CO 80422

Project No. 14.173.A
August 15, 2014

Report Prepared by:

COLORADO LICENSED
YVONNE E. SCHIMMEL
48363
8/15/14
PROFESSIONAL ENGINEER

Yvonne E. Schimmel, P.E.
Staff Engineer

Darin R. Duran, P.E.
Principal, Geotechnical Engineering Manager

TABLE OF CONTENTS

1. PURPOSE 1
2. PROPOSED CONSTRUCTION 1
3. SITE CONDITIONS 1
4. INVESTIGATIONS 1
5. LABORATORY TESTING 1
6. SUBSURFACE CONDITIONS 2
7. EXCAVATIONS 2
8. FOUNDATION RECOMMENDATIONS 2
9. FLOOR SLABS 3
10. STRUCTURAL FILL SOILS 3
11. SURFACE DRAINAGE 3
12. SUBSURFACE DRAINAGE 4
13. LATERAL EARTH PRESSURES 4
14. WATER SOLUBLE SULFATES 4
15. GEOTECHNICAL RISK 4
16. LIMITATIONS 5

TABLE

SUMMARY OF LABORATORY TEST RESULTS ..... TABLE 1

FIGURES

SITE PLAN AND BORING LOCATIONS ..... FIGURE 1
LOGS OF BORINGS (INCLUDES KEY TO SYMBOLS) ..... FIGURE 2

APPENDIX

LABORATORY TEST RESULTS ..... APPENDIX A

1. PURPOSE

This report presents results of a geotechnical study at 401 Chase Street in Black Hawk, Colorado. The study was made to assist in determining design criteria for planning, site development, foundation systems, floor slabs, drainage adjacent to structures, and to present other pertinent geotechnical issues. Factual data gathered during the field and laboratory work is summarized in Table 1, Figures 1 and 2, and Appendix A. Cesare, Inc.'s (Cesare) opinions and recommendations presented in this report are based on the data generated during this field investigation, laboratory testing, and our experience with similar type projects.

2. PROPOSED CONSTRUCTION

It is our understanding renovations are planned for the residence. The residence will have a new foundation constructed, while trying to keep as much of the existing structure intact, as practicable. Rock retaining walls are planned behind the residence. The locations of our borings are shown in Figure 1.

3. SITE CONDITIONS

The site is located at 401 High Street in Black Hawk, Colorado. The existing residence is one story and faces south. The age of the residence is unknown. The residence is bound by Chase Street to the south, a residence to the east, and there are mine tailings on the slope to the west and north of the residence. There are no bodies of water on the site. Details for the existing foundation of the residence are unknown.

4. INVESTIGATIONS

Subsurface conditions for the structure foundations were investigated by drilling four borings at the locations indicated in Figure 1. The borings were advanced using hand auger equipment. Logs of the borings are presented on the Logs of Borings, Figure 2. Where possible, a sample of the subsoils was taken using a California sampler which is driven into the soil by dropping a 35 pound hammer through a free fall of 30 inches. The California sampler is a 2.5 inch outside diameter by 2 inch inside diameter device. The procedure to drive the California sampler into the soil and to record the number of blows required to drive the sampler into the soils is known as a penetration test. The number of blows required for the sampler to penetrate 12 inches gives an indication of the consistency or relative density of the soils encountered. Our penetration test results have been converted into equivalent numbers using a standard 140 pound hammer according to the procedure outlined in Chapter 1 of the *Foundation Engineering Handbook* by Winterkorn and Fang, 1975. Results of the penetration tests and locations of sampling are presented on the Logs of Borings, Figure 2. Bulk samples were collected from each boring.

5. LABORATORY TESTING

Samples were returned to the laboratory where they were visually classified and appropriate testing assigned to specific samples to evaluate pertinent engineering properties. The laboratory tests included two gradation analysis tests and Atterberg limits tests were conducted to evaluate grain/size distribution and plasticity of selected samples. One water soluble sulfate test was performed to determine the reactivity of the subgrade soils to cement. These results are presented in Table 1 and Appendix A.

6. SUBSURFACE CONDITIONS

Our borings indicate the subsoils, in general, consist of native sand and mine tailings. The native sand is described as silty, with gravel, with occasional cobbles, with clay lenses, poorly graded, fine to medium grained, slightly moist to moist, with occasional rootlets, and brown in color. In borings B-2 and B-3, the sand was placed as fill. The mine tailings are described as sand, silty, clayey, with gravel, poorly graded, fine to medium grained, slightly moist to moist, and light brown to brown in color.

Auger refusal was encountered in borings B-1, B-2, and B-4 at depths of 1 foot, 2 feet, and 1.3 feet, respectively. No groundwater or bedrock was encountered up to a depth of 5 feet at the time of exploration. A more complete description of the subsoils is shown in Figure 2. Borings were backfilled at drilling completion for safety purposes.

7. EXCAVATIONS

Excavation will be adjacent to the existing foundation. We recommend new excavations to not intersect a line drawn on a 45 degree angle down and away from the bottom edge of the existing foundation system. Because of the loose and granular nature of the existing fill and native soils, there is a risk that a vertical excavation will undermine the existing foundation. In order to minimize the risk of undermining the existing foundation and to minimize the impact on the structure if undermining of the foundation does occur, we recommend that the excavation be performed in sections that are limited to a maximum length of 4 feet. The distance between excavations should also be a minimum of 4 feet. Temporary shoring of the structure should be placed during the excavation process in order to minimize impact on the structure if undermining of the foundation does occur.

8. FOUNDATION RECOMMENDATIONS

The proposed structure should be founded on conventional spread footings or pad-type footings bearing on the natural, undisturbed soils (or on controlled, structural fill) below frost depth and below any existing manmade fill or mine tailings. Footings should be designed for a maximum allowable soil bearing pressure of 2,500 pounds per square foot (psf) based upon dead load plus full live load. Footings should have a minimum width of 16 inches. The following design criteria should also be observed:

a) Using the soil pressure recommended above, we estimate the maximum movement for the footing will be on the order of 1 inch with differential movement equal to the maximum. Footings should be proportioned as much as practicable to minimize differential movement.
b) Continuous concrete foundation walls should be designed with steel reinforcement to span a localized settlement or heave over a distance of 10 feet.
c) All loose or disturbed bearing soils or existing manmade fill should be removed beneath the footings. Excavations should not undermine the existing foundation system. See section **7. EXCAVATIONS** regarding additional excavation recommendations.
d) All footing excavations should be inspected by a geotechnical engineer prior to concrete placement.

9. FLOOR SLABS

Concrete slabs placed on the natural sandy soils, or on properly placed structural fill comprised of this material, do not require special considerations. The exposed slab subgrade soils should be proof rolled and any soft areas redensified or stabilized with structurally controlled fill according to the recommendations section **10. STRUCTURAL FILL SOILS** of this report.

The existing mine tailings and manmade fill was probably placed at the same time the structure was built. Most settlement of the fill has likely been completed. Additional settlement, however, may occur after the construction is complete. To reduce possible movement of the slabs-on-grade, we recommend all existing tailings and fill should be removed. Material should then be placed according to the recommendations in section **10. STRUCTURAL FILL SOILS** of this report. If the owner wishes to accept the risk of possible slab movement without removal of existing fill, we recommend the slab-on-grade be properly jointed and separated from bearing members and utilities. However, any fill containing organic or deleterious material should be removed.

10. STRUCTURAL FILL SOILS

Where fill soils are necessary, the suitable on-site inorganic soils may be used for structural fill beneath slabs and footings. Particles greater than 6 inches in diameter should be removed prior to use as fill. The fill material beneath slabs and footings should be placed in 8 inch maximum, loose lifts within 2 percent of optimum moisture content and should be compacted to at least 95 percent of standard Proctor density according to ASTM D698. All topsoil, existing manmade fill, mine tailings, frozen material, and soil containing organic material should be removed beneath structural areas prior to placement of fill or concrete. No structural fill is permitted under walls without widened footings.

11. SURFACE DRAINAGE

The following drainage precautions should be observed:

a) Backfill around the exterior foundation walls in non-structural areas should be moistened to within 2 percent of optimum moisture and compacted to at least 95 percent of standard Proctor density according to ASTM D698.
b) The ground surface around the perimeter foundation walls should be sloped to drain away from the structure in all directions. We recommend a minimum slope of 12 inches in the first 10 feet, if possible. If properly compacted backfill is placed, then a slope of 5 percent is reasonable. Concrete and pavement adjacent to structures are recommended to slope at a rate of 2 percent away from the structure.
c) Watering directly adjacent to the structure should be minimized.
d) Lawn edging, used around the exterior of the structure, should be perforated to prevent ponding of surface water in the vicinity of the backfill soils.
e) Roof downspouts and other water collection systems should discharge beyond the limits of the backfill. Splash blocks should be appropriately placed and maintained.

12. SUBSURFACE DRAINAGE

Groundwater was not encountered during this study. This indicates that subdrains will not be required for below grade construction; however, below grade excavations often permit groundwater or surface water to drain into these areas.

We assume the structure may have a slab-on-grade floor system. In our opinion, no subdrains will be necessary for at or above grade areas. If any below grade areas, such as crawlspaces and basements are planned or anticipated, a subsurface drainage system should be provided. The drainage system should be sloped to drain to a positive gravity discharge or sump. The drainage system should consist of perforated or equivalent rigid plastic pipe placed around the perimeter of below grade areas and at least 8 inches below the level of the floor slabs. The pipe should be placed in an envelope of properly graded gravel. The gravel should be at least 8 inches thick on all sides of the pipe. The top 3 feet of backfill should be properly compacted.

13. LATERAL EARTH PRESSURES

Lateral pressures on walls depend upon the type of wall, hydrostatic pressure behind the wall, type of backfill material, and allowable wall movements. We recommend hydrostatic pressures be minimized by placing a properly designed drain system behind the wall. Where anticipated wall movements are less than approximately 0.5 percent of the wall height or wall movement is constrained, lateral earth pressures should be estimated for an "at rest" condition. Where anticipated wall movements are greater than 0.5 percent of the wall height, lateral earth pressures should be estimated for an "active" condition. Walls backfilled with on-site sandy clay material should be designed for an equivalent lateral earth pressure of 70 pounds per cubic foot (pcf) for the "at rest" condition and 45 pcf for the "active" condition. Passive resistance of 275 pcf can be used. These soil pressures are for horizontal backfill and no hydrostatic pressures. If these criteria cannot be met, then we should be contacted for additional criteria. We recommend a coefficient of sliding resistance between the concrete and bearing soils of 0.6 be assumed in your analysis.

14. WATER SOLUBLE SULFATES

Testing conducted on a sample collected from boring B-3 indicated 0.12 percent water soluble sulfate. The Portland Cement Association considers this a moderate to severe percentage of water soluble sulfates according to the *Design and Control of Concrete Mixtures*. A Type II (C_3A less than 8 percent) or Type II Modified cement is recommended for all foundation concrete which will be in contact with or within 6 inches of the natural soils. We recommend the *Concrete Manual ACI-301* Section 3.4.3. be used regarding the water cement ratio and the water reducing admixture.

15. GEOTECHNICAL RISK

The concept of risk is an important aspect of any geotechnical evaluation. The primary reason for this is that the analytical methods used by geotechnical engineers are generally empirical and must be tempered by engineering judgment and experience. Therefore, the solutions or recommendations presented in any geotechnical evaluation should not be considered risk free, and more importantly, are not a guarantee that the interaction between the soils and the proposed foundation will perform as predicted, desired, or intended. The engineering recommendations presented in the preceding sections constitute our best estimate of those measures that are

necessary to help the foundation perform in a satisfactory manner based on the information generated during this and previous evaluations and our experience in working with these conditions.

16. LIMITATIONS

The professional judgments expressed in this report meet the standard care of our profession. The borings drilled for this study were located to obtain a reasonably accurate picture of underground conditions for design purposes. Variations frequently occur from these conditions which are not indicated by the borings. These variations are sometimes sufficient to necessitate modifications in the design. If unexpected conditions are observed during construction or, if the size, type, or location of the structure should change, we should be notified to review our recommendations. A member of our firm should observe concrete placement and compaction of fill. The geotechnical engineer in charge of this project is not a mold prevention consultant. None of the services performed in connection with this study were designed or conducted for the purpose of mold prevention. Proper implementation of the recommendations conveyed in this report will not, of itself, be sufficient to prevent mold from growing in or on the structures involved. Our study did not include any assessment of the mine tailings for environmental hazards or stability of slopes surrounding the residence.

CESARE, INC.
Geotechnical Engineers & Construction Materials Consultants

TABLE 1
Summary of Laboratory Test Results
401 Chase Street
Project No. 14.173.A

Sample Location		Water Soluble Sulfates (%)	Gradation			Atterberg Limits		Material Type
Boring	Depth (feet)		Gravel (%)	Sand (%)	Silt/Clay (%)	Liquid Limit (%)	Plasticity Index (%)	
B-2	0'-2'		15	71	14	23	3	SAND, silty, with gravel, brown (SM); A-1-b (0)
B-3	4'	0.12						SAND, silty, with gravel, brown
B-4	0'-1.3'		17	69	14	22	4	SAND, clayey, silty, with gravel, brown (SC-SM); A-1-b (0)

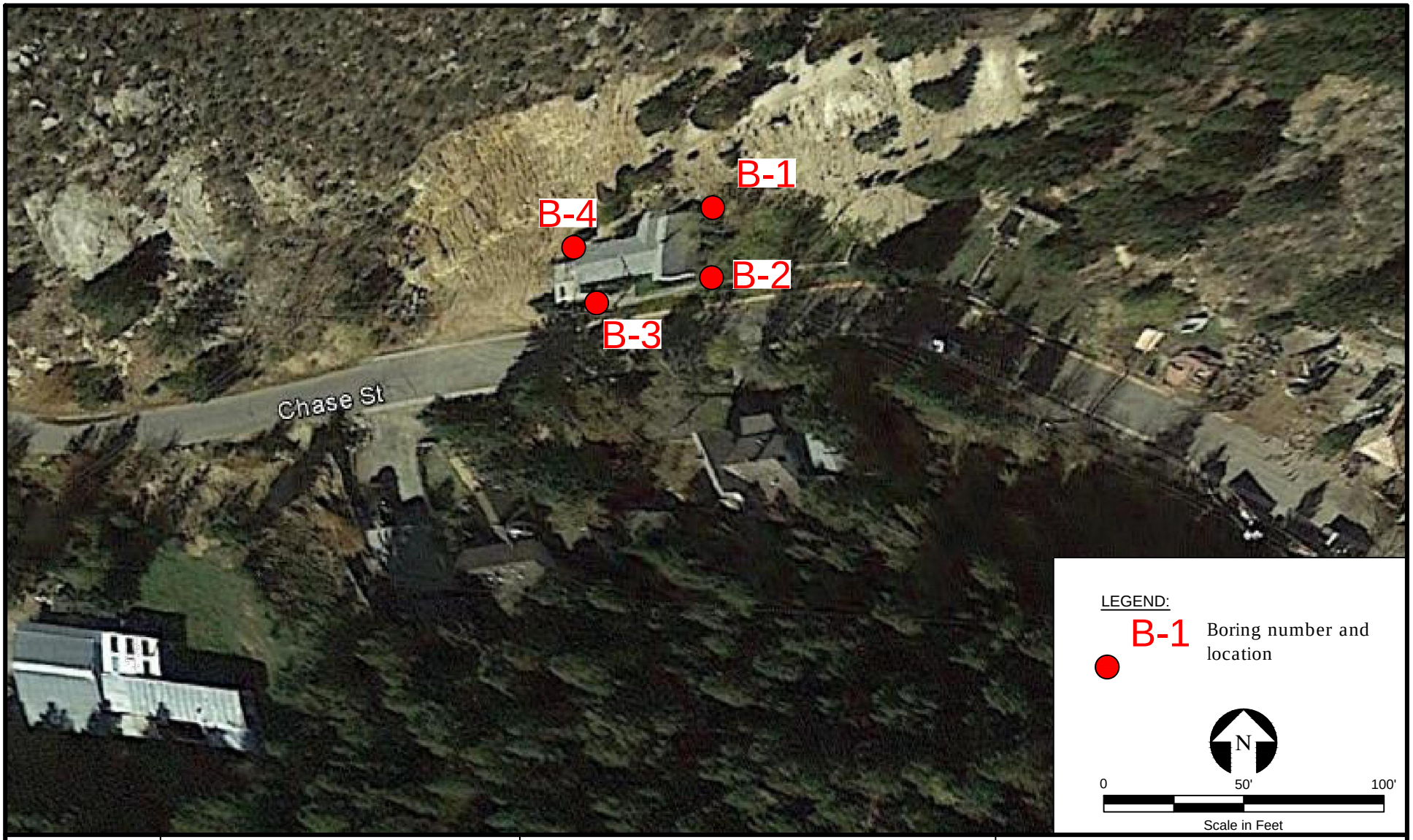

PROJECT NO:	14.173.A		
PROJECT NAME:	401 Chase Street		
DRAWN BY:	YES	CHECKED BY:	DRD
DWG DATE:	08.11.14	REV. DATE:	--

FIGURE 1
Site Plan and Boring Locations

CESARE, INC.
Geotechnical Engineers & Construction Materials Consultants

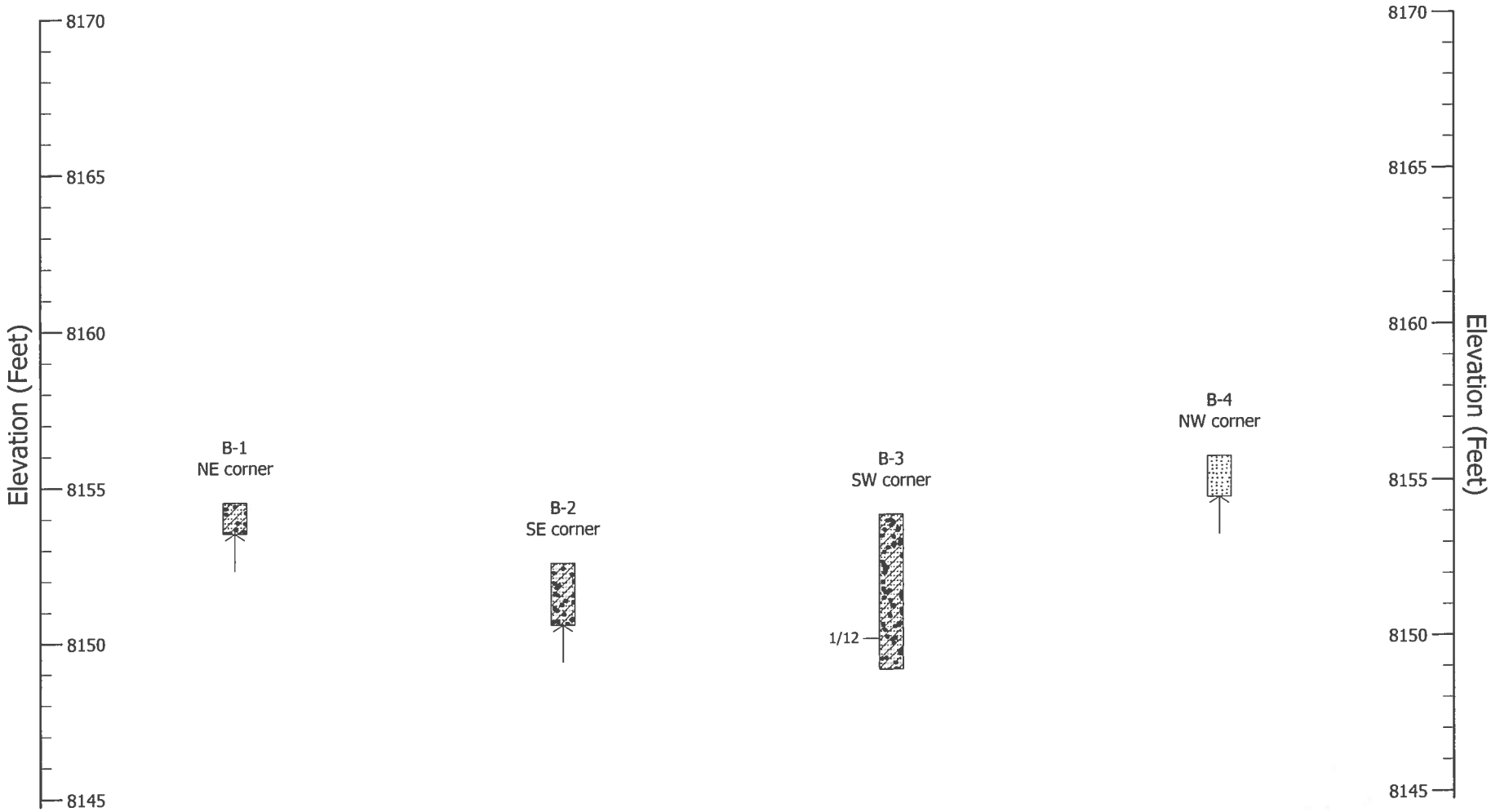

PROJECT NO:	14.173.A	**FIGURE 2** Logs of Borings	CESARE, INC. *Geotechnical Engineers & Construction Materials Consultants*
PROJECT NAME:	401 Chase Street		
DATE:	8/14/2014		

KEY TO SYMBOLS

Symbol	Description
Strata symbols	
	SAND; silty, with gravel, with occasional cobbles, with clay lenses, poorly graded, fine to medium grained, slightly moist to moist, with occasional rootlets, brown, (SM; A-1-b).
	MINE TAILINGS, SAND; silty, clayey, with gravel, poorly graded, fine to medium grained, slightly moist to moist, light brown to brown, (SC-SM; A-1-b).
Misc. Symbols	
↑	Auger refusal

Notes:

1. 1/12 indicates that an equivalent of 1 blow with a 140 pound hammer falling 30 inches was required to drive a modified California barrel sampler 12 inches.

2. Exploratory borings were drilled on July 25, 2014 using a hand auger.

3. Locations for borings were taped off existing interior and exterior features of the building by Cesare, Inc. after borings were drilled. Elevations are based on topographic maps provided by Consillium Partners.

4. Groundwater was not encountered at the time of drilling. Borings were backfilled at drilling completion for safety purposes.

5. These logs are subject to the limitations, conclusions, and recommendations in this report.

Project No. 14.173.A.

APPENDIX A

Laboratory Test Results

CESARE, INC.
Geotechnical Engineers & Construction Materials Consultants

GRADATION PLOT - SOIL & AGGREGATE

Project Number:	14.173.A, City of Black Hawk	Date:	30-Jul-14
Project Name:	401 Chase Street	Technician:	AMC2
Lab ID Number:	1421330	Reviewer:	YES
Sample Location:	B-2, 0'-2'		
Visual Description:	SAND, silty, with gravel, brown		

AASHTO M 145 Classification: **A-1-b** **Group Index:** **(0)**

Unified Soil Classification System (ASTM D 2487): **(SM)** **Silty sand with gravel**

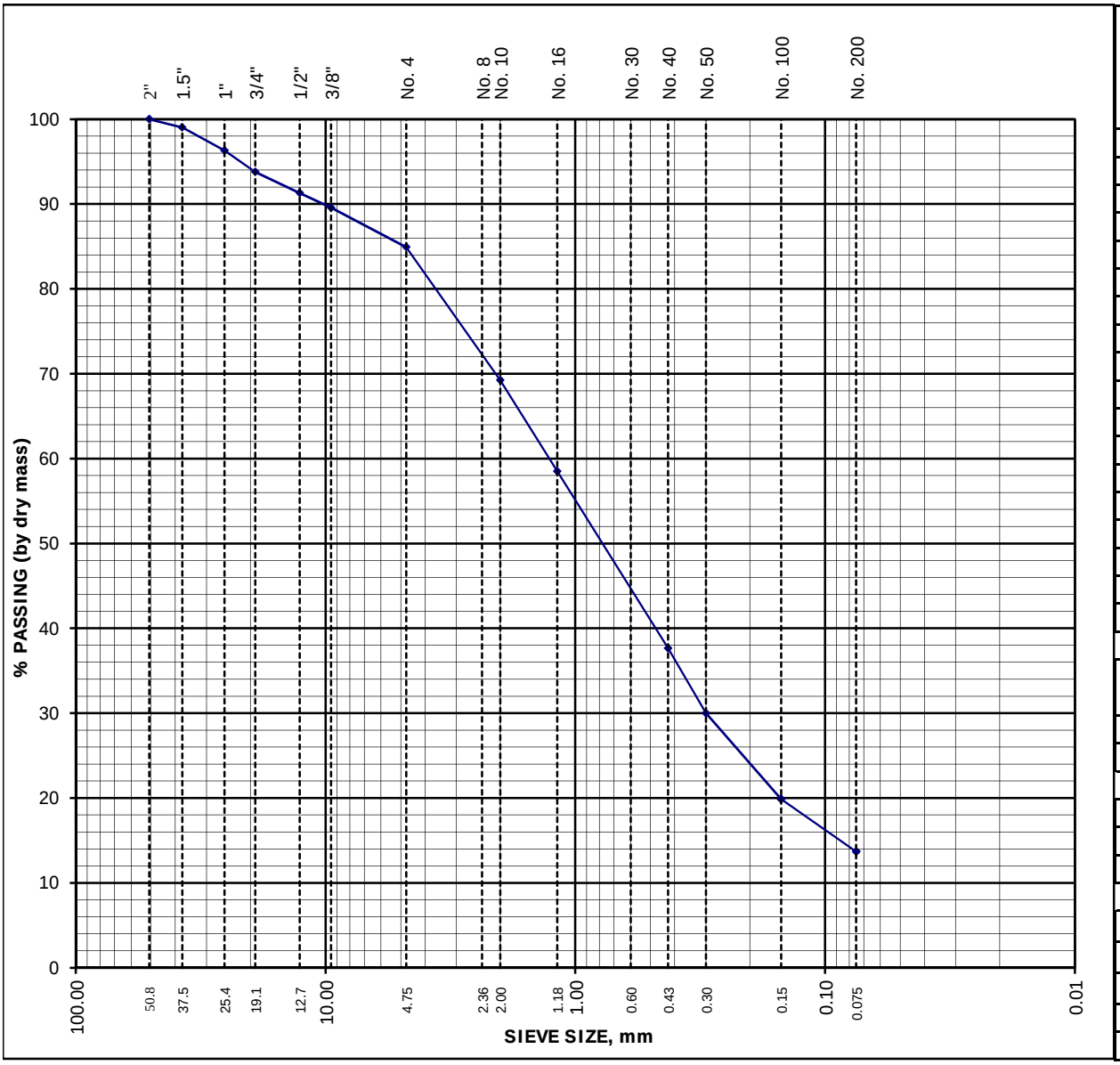

Sieve Size	% Passing
2"	100
1.5"	99
1"	96
3/4"	94
1/2"	91
3/8"	90
#4	85
#8	
#10	69
#16	59
#30	
#40	38
#50	30
#100	20
#200	13.7

Moisture (M) & Density (D)	
M, %:	2.5
D, pcf:	

LL	23
PL	20
PI	3

D_{60}	
D_{30}	
D_{10}	
Cu	
Cc	

CESARE, INC.
Geotechnical Engineers & Construction Materials Consultants

GRADATION PLOT - SOIL & AGGREGATE

Project Number:	14.173.A, City of Black Hawk	Date:	30-Jul-14
Project Name:	401 Chase Street	Technician:	AMC2
Lab ID Number:	1421332	Reviewer:	YES
Sample Location:	B-4, 0'-1.3'		
Visual Description:	SAND, clayey, silty, with gravel, brown		

AASHTO M 145 Classification: A-1-b Group Index: (0)

Unified Soil Classification System (ASTM D 2487): (SC-SM) Silty clayey sand with gravel

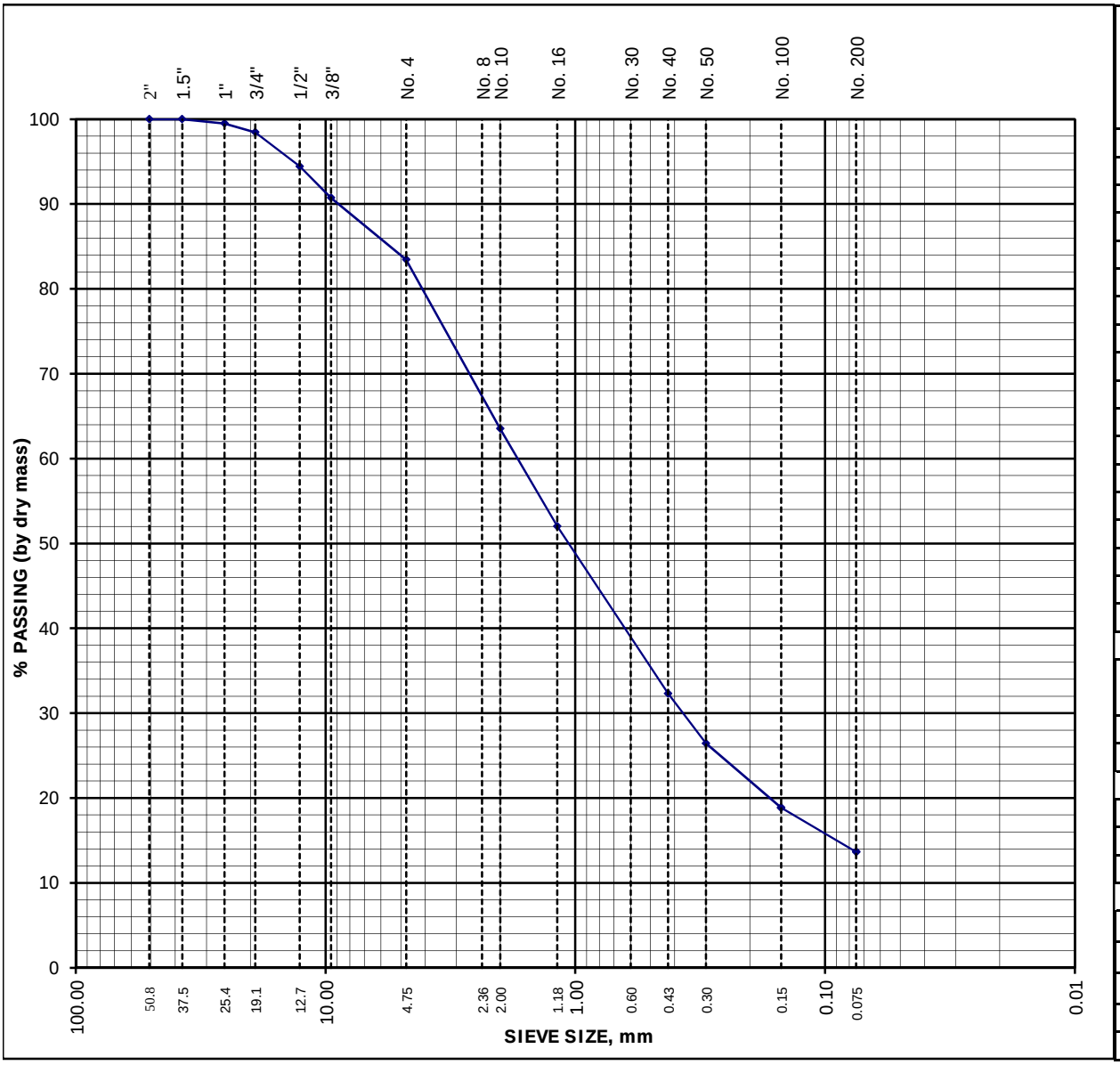

Sieve Size	% Passing
2"	
1.5"	100
1"	99
3/4"	98
1/2"	94
3/8"	91
#4	83
#8	
#10	64
#16	52
#30	
#40	32
#50	26
#100	19
#200	13.6

Moisture (M) & Density (D)	
M, %:	2.9
D, pcf:	

LL	22
PL	18
PI	4

D_{60}	
D_{30}	
D_{10}	
Cu	
Cc	

SHINGLES
OWENS CORNING OAKRIDGE SERIES
TEAK

SIDING COLOR
SHERWIN WILLIAMS
SW 6440 - COURTYARD

TRIM COLOR
SHERWIN WILLIAMS
SW 6819 - MINUET WHITE

ACCENT COLOR
SHERWIN WILLIAMS
SW 6104 - KAFFEE

WINDOW TRIM
MARVIN
MEDIUM BRONZE

10/02/14

401 CHASE STREET
BLACK HAWK • COLORADO

pdh ARCHITECTS
BOULDER, COLORADO

ATTACHMENT D

"Window, Siding, and Trim Investigation of 401 Chase Street," Anthony & Associates

Report:

Siding and Trim Investigation of 401 Chase Street, Black Hawk, Colorado

Submitted to:

The City of Black Hawk
211 Church Street
Black Hawk, CO 80422

Submitted by:

Anthony & Associates, Inc.
P.O. Box 271400
Fort Collins, CO 80527-1400

September 17, 2014

Siding and Trim Investigation of 401 Chase Street, Black Hawk, Colorado

BACKGROUND

This report is based on information provided by Ms. Cynthia Linker from the City of Black Hawk. Anthony & Associates, Inc. (A&A) was asked to conduct a limited investigation of the exterior architectural wood of 401 Chase Street (the Building), a city-owned property located in Black Hawk, Colorado.

The Building, which is believed to have been constructed ca. 1890, is a small, wood-frame building with a modified "T-shaped" footprint. It is clad with a combination of wood trim, wood siding, wood fiber product siding, and metal sheeting.

SCOPE OF WORK

There were questions regarding the general condition and age of the Building's wood siding. The species of the wood siding was unknown. It was also not known whether insects or decay fungi are active and if deterioration of the wood has occurred. The level of investigation was chosen to provide insight about the age and general condition of the exterior architectural wood.

The scope of work included the following tasks:

- Conducting a site visit to photograph and document existing conditions, followed with a limited assessment report.
- Removing a minimum of 8 wood species samples to identify the wood species or wood species groups for the siding and exterior trim elements.
- Conducting a limited visual investigation of the visible wood conditions of the Building that included taking moisture content measurements of a representative sample of siding elements to determine whether conditions exist that are favorable to the growth of wood decay fungi and to identify areas of moisture intrusion.
- Examining the fasteners and the siding for indicators of age

FIELD PROCEDURES

Anthony & Associates, Inc. provided a wood specialist on September 4, 2014 to conduct an investigation of the exterior wood siding and trim of the Building. The investigation was based on a combination of visual inspection, moisture content determination and species identification. These methods are described below.

Species Identification

The Building is partially clad in wood siding with wood trim. Identifying wood species makes it possible to identify compatible material for repairs and can aid in historic interpretation of construction or repair campaigns. Wood species were identified by removing small samples from which the species or species group were identified under microscopic examination. Although a minimum of 8 samples was included in the authorization, additional samples were removed to identify species of key architectural wood elements and to aid in developing historical documentation and interpretation.

Visual Inspection

Visual examination of the wood allows for identifying components that are missing, broken, or in an advanced state of deterioration. If missing components were intended to provide protection from the elements (i.e., to prevent moisture intrusion), their replacement may be essential to prevent long-term damage to the structure. Visual inspection also allows for the detection of past or current moisture problems, as evidenced by moisture stains on the exposed surface of the wood. Further, visual inspection enables detection of external wood decay fungi or insect activity as determined by the presence of decay fruiting bodies, fungal growth, insect bore holes or wood substance removed by wood-destroying insects.

Moisture Content Determination

Prolonged exposure to moisture can produce undesirable conditions and maintenance issues for wood in a structure. Shrinkage, swelling, checking, loose connections, and decay are typical problems. Moisture content measurements were taken at multiple locations of the exterior siding and trim.

Moisture content measurements identify wood with favorable moisture levels for the growth of wood-decay fungi. Generally, if the moisture content is less than 20 percent, wood-decay fungi are unable to grow. While fungi may be present at lower moisture contents, they are unable to continue to deteriorate the wood without sufficient moisture. Moisture contents from 20 to 30 percent indicate areas of concern where sufficient moisture is present for fungi to grow but not sufficient to indicate advanced decay. Moisture contents above 30 percent can indicate advanced decay with internal voids and/or surface deterioration.

FINDINGS

General

The long axis of the Building is oriented approximately east to west; the short axis of the Building, a single-story side gable structure, is oriented on an approximate north-south axis. The Building appears to have been constructed in multiple phases. The north-south side-gabled section appears to have been constructed first, followed by the east-west addition that faces Chase Street. A north addition was added at the junction of the side-gabled structure and the east-west addition, as well as two subsequent additions to the west to house the bathroom and what was, until recently, a closet. The various additions are apparent when viewed at the roofline (Figures 1 and 2). See Figure A-1 in the Appendix for a sketch plan of the Building with the labeled additions.

Figure 1. Roof line showing the various additions. View to the south.

Figure 2. The north elevation of the east-west addition showing a modified roofline for the bathroom addition.

The east and south elevations are clad in horizontal board siding (Figures 3 and 4). All of the window glass appears to be replacement material, with the exception of that found in the double-hung window on the east elevation.

Figure 3. East elevation of the side gable structure with wood siding and intact historic window glass.

Figure 4. South elevation of 401 Chase Street showing the side gable structure (right), and the east-west addition.

The north elevation of the side-gable structure is clad with metal sheeting (Figure 5), while the additions are clad in wood siding. The west elevation of the closet addition is clad in a combination of modern wood fiberboard siding, solid wood siding, and a wood-fiber composite sheeting product that does not appear to be intended for exterior applications (Figure 6). The roof currently has asphalt composite shingles, but remnants of wood shingles are visible on the side-gable structure (Figure 7).

Figure 5. North elevation of the side-gable structure with metal sheet siding.

Figure 6. The west elevation of the closet addition showing wood siding (lower right), wood fiberboard siding (top), and wood fiber composite sheeting (lower right).

Figure 7. Wood roof shingles visible beneath the modern asphalt shingles.

Most of the windows are single-lite, double hung windows with mortise and tenon joinery. Several of the top sashes have loose connections at the bottom (Figure 8) and glazing putty that is in poor condition or missing (Figure 9).

Figure 8. A loose mortise and tenon joint on an upper sash, south elevation.

Figure 9. A window missing glazing putty across the bottom of the glass pane.

Species Identification

Fourteen samples were removed for species identification. Given the assumed age of the Building, historic materials such as siding would likely have been produced from trees with native ranges extending into Colorado, such as western yellow pine (a hard pine species group that includes ponderosa pine and lodgepole pine) and/or Engelmann spruce; however, western yellow pine is still used today for architectural siding and trim, so decisions regarding the age of the exterior architectural wood cannot be based on species alone.

Table 1. Wood Species Identification

Sample Number	Member	Location	Species
1	Window sash	Side gable, east elevation	western yellow pine (*Pinus* spp.)
2	Vertical window trim	Side gable, east elevation	western yellow pine
3	Window sill	Side gable, east elevation	Douglas-fir (*Psuedotsuga menziesii*)
4	Siding	Side gable, east elevation	redwood (*Sequoia sempervirens*)
5	Vertical corner trim	Side gable, south elevation	western yellow pine
6	Siding	Side gable, south elevation	redwood
7	Window sill	East-west addition, south elevation	Douglas-fir
8	Vertical window trim	East-west addition, south elevation	southern yellow pine
9	Upper window sash	East-west addition, south elevation	western yellow pine
10	Siding	Bath addition, south elevation	eastern white pine
11	Window sill	Bath addition, south elevation	Engelmann spruce (*Picea engelmannii*)
12	Siding	Closet Addition, south elevation	western red cedar (*Thuja plicata*)
13	Siding	Bath Addition, north elevation	redwood
14	Siding	East-west addition, north elevation	eastern white pine

Native wood species including western yellow pine, Douglas-fir, and Engelmann spruce were identified for window and trim elements; however, other tree species that are not native to Colorado were also identified, including southern yellow pine, western red-cedar, redwood, and eastern white pine. This mix of species indicates that there have been multiple siding and repair campaigns and that only the windows and some of the trim are likely to be historic or original to the construction of the Building.

Age of Siding and Trim

Determining the exact age of the siding and trim by visual inspection alone is generally not possible. In conjunction with species identification and historical research and documentation, however, it is sometimes possible to determine the sequence in which materials were added or altered by examining the materials and fasteners in detail.
A key identifier can be the type of fastener used to hold wood members or architectural elements together. Wire nails, in common use today, were not widely produced and

used in construction until the 1890s. However, in rural parts of the country, common use of wire nails did not occur until after the turn of the 20th century.

While wire nails have flat, circular heads and round shafts, machine cut nails were typically stamped or cut from a sheet of metal, resulting in square or rectangular heads and square shafts. Machine cut nails were primarily used prior to the widespread manufacture and use of round wire nails. Given the assumed ca. 1890 date of construction, the use of machine cut nails would not be unusual; however, all of the visible fasteners on the siding and trim are wire nails (Figure 10). These findings, in combination with the species identification results, suggest that the majority of the siding and trim is replacement material.

Figure 10. A round wire nail that has been face-nailed into the wood siding.

Wood Condition

Moisture Content Determination

Limited moisture content measurements were taken using a capacitance moisture meter for siding and exterior trim at multiple locations along the building exterior, primarily near ground level, to gain insight into the moisture levels around the perimeter of the Building. Moisture content measurements generally did not exceed 10 percent in the tested areas indicating that the wood is currently at low risk for deterioration by wood decay fungi. However, one area on the north elevation was found to have a moisture content above 30 percent. This area was just to the east of the chimney, where debris build-up and the site topography are conducive to water and snow accumulation and where there is not adequate drainage (Figure 11).

Figure 11. Area of high moisture content on the north elevation, just to the east of the chimney.

Siding and Trim Condition

The wood siding on all elevations is, in general, in good to fair condition, with some failing paint and weathering of exposed wood surfaces, particularly on horizontal surfaces such as window sills and door thresholds (Figure 12). Horizontal surfaces typically bear the brunt of the effects of weathering unless protected from ultraviolet light and moisture exposure by overhangs or eaves. On the east elevation, many of the siding boards exhibit some warp, and a few have broken (Figures 13 and 14). Portions of the south elevation, particularly in areas of snow build-up and vegetation overgrowth, show significant paint failures (Figures 15 and 16). The wood fiber composite product on the closet addition is generally in poor condition, as it does not appear to be a product intended for exterior applications.

Figure 12. Weathering and peeling paint on the door threshold on the west elevation of the side-gable structure.

Figure 13. Siding on the east elevation of the side-gable structure showing some warp and/or twist.

Figure 14. Area on the east elevation of the side-gable structure with broken siding.

Figure 15. Area of peeling paint at the junction of the east-west addition and the side gable structure, south elevation.

Figure 16. Area of peeling paint on the bathroom addition.

The soffits appear to be plywood replacement material. The fascia boards also appear to be replacement material.

SUMMARY OF THE WOOD INVESTIGATION

The exterior architectural siding and trim of 401 Chase Street is, generally, in good to fair condition. There are a few areas of moderate weathering that have resulted in peeling paint and some textured wood with splits and/or surface checks, particularly on horizontal elements such as window sills. Peeling paint also has resulted in areas of high moisture content and/or in areas where snow accumulates during the winter months. Moisture contents at the time of the fieldwork were generally under 10 percent, with the exception of one location on the east-west addition, north elevation, where debris build-up and a lack of adequate drainage has resulted in a moisture build-up issue. Environmental conditions in this area to the east of the chimney are such that additional deterioration is highly likely without intervention.

Based on the current information available and the results of the limited wood investigation, the wood siding on all elevations does not date to the estimated period of construction (ca. 1890). The wood siding appears to have been installed in at least three separate repair campaigns based on species identification results. Additionally, the use of wire nails as fasteners indicates that it is very unlikely that the current siding is part of the original construction.

The likely age of the architectural trim at the windows and corners of the Building is more difficult to determine, given that the wood used in the window construction and vertical trim was identified primarily as coming from local tree species. The trim may date to the original construction and may have been reused and reattached with wire nails, or may date to a repair campaign.

The manufactured wood products used on the west elevation are not historic and reflect relatively recent modifications to the Building.

The findings of the wood investigation can be summarized as follows:

- Based on a limited number of samples removed, the existing exterior architectural wood work (including siding and trim) is a combination of western yellow pine (*Pinus* spp.), southern yellow pine (*Pinus* spp.), redwood (*Sequoia sempervirens*), Douglas-fir (*Pseudotsuga menziesii*), western red-cedar (*Thuja plicata*), eastern white pine (*Pinus strobus*), and Engelmann spruce (*Picea engelmannii*). Repairs and replacements were likely made in multiple campaigns as needed over a period of years.

- The window sashes appear to date to the estimated date of construction; the majority of the window trim may also date to the period of construction.
- While the exact age of the existing wood siding cannot be definitively identified based on existing information, based on the wood species used and the use of round wire nail fasteners, it is likely not original to the construction.
- The wood siding is, in general, in good to fair condition, with a few areas of peeling paint, splits at face-nails, and broken boards. Horizontal wood surfaces typically have failed paint and seasoning checks.

APPENDIX

Sketch Plan

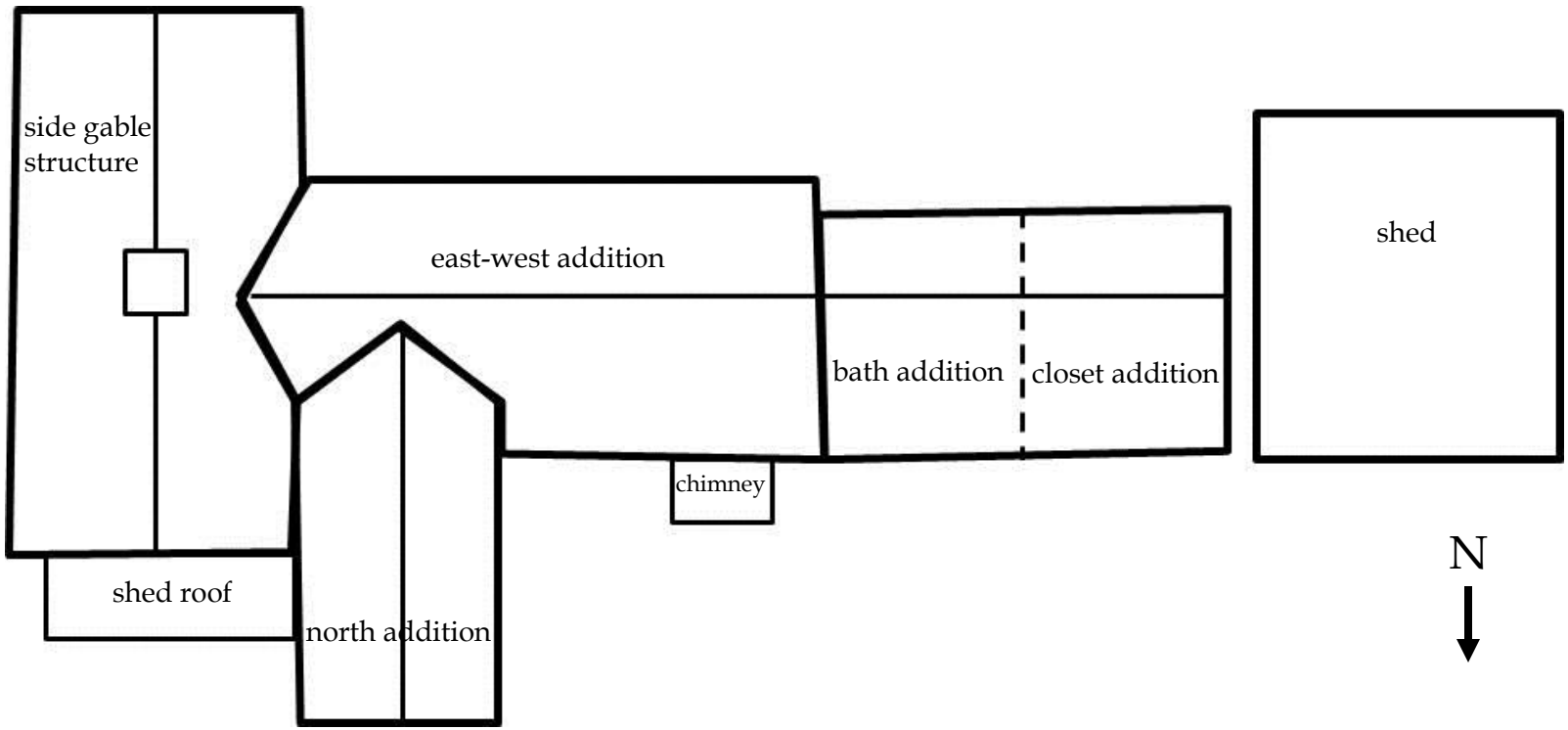

Figure A-1. Plan view of roofline for 401 Chase Street showing what is believed to be the original building (the side gable structure) and the various additions. Field sketch, not to scale.

RESOLUTION 95-2014

A RESOLUTION AUTHORIZING THE CHANGE OF USE OF THE SANITARY SEWER TAP ON CITY-OWNED PROPERTY LOCATED ON 211 GREGORY STREET AND DESCRIBED AS LOTS 3 - 5, BLOCK 28, CITY OF BLACK HAWK

STATE OF COLORADO
COUNTY OF GILPIN
CITY OF BLACK HAWK

Resolution No. 95-2014

TITLE: A RESOLUTION AUTHORIZING THE CHANGE OF USE OF THE SANITARY SEWER TAP ON CITY-OWNED PROPERTY LOCATED ON 211 GREGORY STREET AND DESCRIBED AS LOTS 3 - 5, BLOCK 28, CITY OF BLACK HAWK

NOW, THEREFORE, BE IT RESOLVED BY THE BOARD OF ALDERMEN OF THE CITY OF BLACK HAWK, COLORADO, THAT:

Section 1. The City of Black Hawk hereby determines to change the use of the sanitary sewer tap on City-owned property located on 211 Gregory Street on property legally described as Lots 3 - 5, Block 28, City of Black Hawk. The Board of Aldermen authorizes the Mayor to execute any necessary documents, including any Request for Change of Use, consistent with the regulations of the Black Hawk/Central City Sanitation District to abandon any gaming use associated with the sanitary sewer tap on said property.

RESOLVED AND PASSED this 10th day of December, 2014.

_____
David D. Spellman, Mayor

ATTEST:

_____
Melissa Greiner, City Clerk

CITY OF BLACK HAWK
REQUEST FOR COUNCIL ACTION

SUBJECT: Change of Use for the Sanitary Sewer Tap at 211 Gregory Street (Formerly the Eureka) from Gaming to Commercial-Non Gaming.

RECOMMENDATION: Staff recommends to the Mayor and Board of Aldermen, **A MOTION TO APPROVE** Resolution 95-2014, A Resolution authorizing the change of use of the sanitary sewer tap to non-gaming on City-owned property located on 211 Gregory Street and Described as Lots 3-5, Block 28, City of Black Hawk.

SUMMARY AND BACKGROUND OF SUBJECT MATTER: When the City acquired the property at 211 Gregory, the sewer tap was classified as Gaming, however with the vision for this property to be other Non-Gaming Commercial activities, the use can be changed to reduce the associated user fees.

FUNDING SOURCE: N/A

WORKSHOP DATE: N/A

ORIGINATED BY: Lance Hillis, Finance Director

STAFF PERSON RESPONSIBLE: Lance Hillis, Finance Director

DOCUMENTS ATTACHED: Request for Change of Use of Sewer Tap Form

RECORD: [ ]Yes [X]No

CITY ATTORNEY REVIEW: [ ]Yes [ ]No [X]N/A INITIALS_____

SUBMITTED BY:

Lance Hillis

_____
Lance Hillis, Finance Director

Jack Lewis

_____
Jack Lewis, City Manager

Black Hawk/Central City Sanitation District

REQUEST FOR CHANGE OF USE OF SEWER TAP

(Reduction of Single Family Equivalents)

Date of Request: _____

Requested Effective Date: _____

Property Owner Name(s): City of Black Hawk

Street Address: 211 Gregory St

City: Black Hawk

Legal Description: Block 28, Lots 3-5

Current Single Family Equivalent Value: 40

Reclassified Single Family Equivalent Value: ____

Current Building Use: Gaming

Planned Building Use: Commercial - non-Gaming

As the owner of the property listed above, it is my/our desire to reduce the single family equivalent (SFE) value of the sanitary sewer tap associated with the property according to Section 2.11.b and c of the District's Rules and Regulations. I/We understand and accept that:

1. No capacity will be reserved at the treatment plant for this the relinguished SFE's.
2. Should an increase in the level of sanitary sewer service be requested in the future, a new service tap application must be made and all fees (including tap fee for the requested increase) in effect at the time of application must be paid to the District.
3. Any outstanding fees currently owed to the District must be paid in full with this request.

I/we understand that capacity in the District's treatment plant is limited and that taps may not be available at the time of any future tap application. I/we will have no priority over any other applicant for a tap.

Signatures: **(ALL owners must sign this form. If corporate ownership, also attach a copy of board resolution authorizing this action.)**

Jack D. Lewis

Signature (and title if corporate owner) — Printed Name

Signature (and title if corporate owner) — Printed Name

Signature (and title if corporate owner) — Printed Name

Attach an additional sheet if necessary.

Date Request Received: _____

Date Request Approved: _____ Approved by: _____

RESOLUTION 96-2014

A RESOLUTION AUTHORIZING THE CHANGE OF USE OF THE SANITARY SEWER TAP ON CITY-OWNED PROPERTY LOCATED ON 260 GREGORY STREET AND DESCRIBED AS LOTS 2 - 7, BLOCK 33, CITY OF BLACK HAWK

STATE OF COLORADO
COUNTY OF GILPIN
CITY OF BLACK HAWK

Resolution No. 96-2014

TITLE: A RESOLUTION AUTHORIZING THE CHANGE OF USE OF THE SANITARY SEWER TAP ON CITY-OWNED PROPERTY LOCATED ON 260 GREGORY STREET AND DESCRIBED AS LOTS 2 - 7, BLOCK 33, CITY OF BLACK HAWK

NOW, THEREFORE, BE IT RESOLVED BY THE BOARD OF ALDERMEN OF THE CITY OF BLACK HAWK, COLORADO, THAT:

Section 1. The City of Black Hawk hereby determines to change the use of the sanitary sewer tap on City-owned property located on 260 Gregory Street on property legally described as Lots 2 - 7, Block 33, City of Black Hawk. The Board of Aldermen authorizes the Mayor to execute any necessary documents, including any Request for Change of Use, consistent with the regulations of the Black Hawk/Central City Sanitation District to abandon any gaming use associated with the sanitary sewer tap on said property.

RESOLVED AND PASSED this 10th day of December, 2014.

_____
David D. Spellman, Mayor

ATTEST:

_____
Melissa Greiner, City Clerk

CITY OF BLACK HAWK
REQUEST FOR COUNCIL ACTION

SUBJECT: Change of Use for the Sanitary Sewer Tap at 260 Gregory Street (Formerly the Winners Haven) from Gaming to Commercial-Non Gaming.

RECOMMENDATION: Staff recommends to the Mayor and Board of Aldermen, **A MOTION TO APPROVE** Resolution 96-2014, A Resolution authorizing the change of use of the sanitary sewer tap to non-gaming on City-owned property located on 260 Gregory Street and Described as Lots 2-7, Block 33, City of Black Hawk.

SUMMARY AND BACKGROUND OF SUBJECT MATTER: When the City acquired the property at 260 Gregory, the sewer tap was classified as Gaming, however with the vision for this property to be other Non-Gaming Commercial activities, the use can be changed to reduce the associated user fees.

FUNDING SOURCE: N/A

WORKSHOP DATE: N/A

ORIGINATED BY: Lance Hillis, Finance Director

STAFF PERSON RESPONSIBLE: Lance Hillis, Finance Director

DOCUMENTS ATTACHED: Request for Change of Use of Sewer Tap Form

RECORD: [ ]Yes [X]No

CITY ATTORNEY REVIEW: [ ]Yes [ ]No [X]N/A INITIALS_____

SUBMITTED BY:

Lance Hillis

_____
Lance Hillis, Finance Director

Jack Lewis

_____
Jack Lewis, City Manager

Black Hawk/Central City Sanitation District

REQUEST FOR CHANGE OF USE OF SEWER TAP

(Reduction of Single Family Equivalents)

Date of Request: _____

Requested Effective Date: _____

Property

Owner Name(s): City of Black Hawk

Street Address: 260 Gregory Street

City: Black Hawk

Legal Description: Block 33, Lots 2-7

Current Single Family Equivalent Value: 257

Reclassified Single Family Equivalent Value: ____

Current Building Use: Gaming

Planned Building Use: Commercial Non-Gaming

As the owner of the property listed above, it is my/our desire to reduce the single family equivalent (SFE) value of the sanitary sewer tap associated with the property according to Section 2.11.b and c of the District's Rules and Regulations. I/We understand and accept that:

1. No capacity will be reserved at the treatment plant for this the relinguished SFE's.
2. Should an increase in the level of sanitary sewer service be requested in the future, a new service tap application must be made and all fees (including tap fee for the requested increase) in effect at the time of application must be paid to the District.
3. Any outstanding fees currently owed to the District must be paid in full with this request.

I/we understand that capacity in the District's treatment plant is limited and that taps may not be available at the time of any future tap application. I/we will have no priority over any other applicant for a tap.

Signatures: **(ALL owners must sign this form. If corporate ownership, also attach a copy of board resolution authorizing this action.)**

Jack D. Lewis — JACK D. LEWIS

Signature (and title if corporate owner) — Printed Name

_____ — _____

Signature (and title if corporate owner) — Printed Name

_____ — _____

Signature (and title if corporate owner) — Printed Name

Attach an additional sheet if necessary.

Date Request Received: _____

Date Request Approved: _____ Approved by: _____

RESOLUTION 97-2014

A RESOLUTION ADOPTING THE 2015 HOLIDAY SCHEDULE

STATE OF COLORADO
COUNTY OF GILPIN
CITY OF BLACK HAWK

Resolution No. 97-2014

TITLE: A RESOLUTION ADOPTING THE 2015 HOLIDAY SCHEDULE

NOW, THEREFORE, BE IT RESOLVED BY THE BOARD OF ALDERMEN OF THE CITY OF BLACK HAWK, COLORADO, THAT:

Section 1. Pursuant to Section 304 of the City of Black Hawk Employee Handbook, the Board of Aldermen hereby adopts the 2015 Holiday Schedule attached hereto as **Exhibit A**, and incorporated herein by this reference.

RESOLVED AND PASSED this 10th day of December, 2014.

_____
David D. Spellman, Mayor

ATTEST:

_____
Melissa Greiner, City Clerk

CITY OF BLACK HAWK
REQUEST FOR COUNCIL ACTION

SUBJECT: 2015 Holiday Schedule

RECOMMENDATION: Staff recommends the following motion to the Mayor and Board of Aldermen:

MOTION TO APPROVE Resolution 97-2014, A Resolution Adopting the 2015 Holiday Schedule

SUMMARY AND BACKGROUND OF SUBJECT MATTER:

AGENDA DATE: December 10, 2014

WORKSHOP DATE: N/A

FUNDING SOURCE: N/A

DEPARTMENT DIRECTOR APPROVAL: [X]Yes [ ]No

STAFF PERSON RESPONSIBLE: Melissa Greiner, City Clerk

DOCUMENTS ATTACHED: 2015 Holiday Schedule

RECORD: [ ]Yes [X]No

CITY ATTORNEY REVIEW: [ ]Yes [X]N/A

SUBMITTED BY: **REVIEWED BY:**

Melissa Greiner

Staff Name, Staff Title

Jack D. Lewis

Jack D. Lewis, City Manager

2015 HOLIDAYS

The following is the list of approved holidays from the current Employee Handbook, and the proposed days these will be celebrated in the year 2015.

New Year's Day	**Thursday, January 1, 2015**
Martin Luther King Jr. Day (Third Monday)	**Monday, January 19, 2015**
President's Day (Third Monday)	**Monday, February 16, 2015**
Memorial Day (last Monday in May)	**Monday, May 25, 2015**
Independence Day	**Friday, July 3, 2015**
Labor Day	**Monday, September 7, 2015**
Thanksgiving (Fourth Thursday)	**Thursday, November 26, 2015**
Day after Thanksgiving	**Friday, November 27, 2015**
Christmas Eve	**Thursday, December 24, 2015**
Christmas Day	**Friday, December 25, 2015**
New Year's Eve	**Thursday, December 31, 2015**

Section 304 of the Employee Manual, states on the preceding Friday. "A recognized holiday that falls on a Saturday will be observed the proceeding Friday. A recognized holiday that falls on a Sunday will be observed on the following Monday."

RESOLUTION 98-2014

A RESOLUTION ADOPTING THE 2015 CITY COUNCIL REGULAR MEETING SCHEDULE

STATE OF COLORADO
COUNTY OF GILPIN
CITY OF BLACK HAWK

Resolution No. 98-2014

TITLE: A RESOLUTION ADOPTING THE 2015 CITY COUNCIL REGULAR MEETING SCHEDULE

NOW, THEREFORE, BE IT RESOLVED BY THE BOARD OF ALDERMEN OF THE CITY OF BLACK HAWK, COLORADO, THAT:

Section 1. Pursuant to Article II, Section 11 of the City of Black Hawk Home Rule Charter, the Board of Aldermen hereby adopts the 2015 Regular Meeting Schedule attached hereto as **Exhibit A**, and incorporated herein by this reference.

RESOLVED AND PASSED this 10th day of December, 2014.

_____
David D. Spellman, Mayor

ATTEST:

_____
Melissa Greiner, City Clerk

CITY OF BLACK HAWK
REQUEST FOR COUNCIL ACTION

SUBJECT: 2015 City Council Regular Meeting Schedule

RECOMMENDATION: Staff recommends the following motion to the Mayor and Board of Aldermen:

MOTION TO APPROVE Resolution 98-2014, A Resolution Adopting the 2015 City Council Regular Meeting Schedule

SUMMARY AND BACKGROUND OF SUBJECT MATTER:

AGENDA DATE: December 10, 2014

WORKSHOP DATE: N/A

FUNDING SOURCE: N/A

DEPARTMENT DIRECTOR APPROVAL: [X]Yes [ ]No

STAFF PERSON RESPONSIBLE: Melissa Greiner, City Clerk

DOCUMENTS ATTACHED: 2015 City Council Regular Meeting Schedule

RECORD: [ ]Yes [X]No

CITY ATTORNEY REVIEW: [ ]Yes [X]N/A

SUBMITTED BY:	**REVIEWED BY:**
Melissa Greiner	Jack D Lewis
Staff Name, Staff Title	Jack D. Lewis, City Manager

2015 CITY COUNCIL MEETINGS

2nd Wednesday of the month at 3:00 p.m.
4th Wednesday of the month at 3:00 p.m.

January 14	**July 8**
January 28	**July 22**
February 11	**August 12**
February 25	**August 26**
March 11	**September 9**
March 25	**September 23**
April 8	**October 14**
April 22	**October 28**
May 13	**November 4***
May 27	**November 11***
June 10	**December 2***
June 24	**December 9***

***First meetings in November and December will be held the 1st Wednesday of the month and the second meetings will be held the 2nd Wednesday month as need or determined by Council.**

RESOLUTION 99-2014

A RESOLUTION ESTABLISHING A DESIGNATED PUBLIC PLACE FOR THE POSTING OF 2015 MEETING NOTICES AS REQUIRED BY THE COLORADO OPEN MEETINGS LAW

STATE OF COLORADO
COUNTY OF GILPIN
CITY OF BLACK HAWK

Resolution No. 99-2014

TITLE: A RESOLUTION ESTABLISHING A DESIGNATED PUBLIC PLACE FOR THE POSTING OF 2015 MEETING NOTICES AS REQUIRED BY THE COLORADO OPEN MEETINGS LAW

NOW, THEREFORE, BE IT RESOLVED BY THE BOARD OF ALDERMEN OF THE CITY OF BLACK HAWK, COLORADO, THAT:

Section 1. Black Hawk City Hall shall constitute the public place for the posting of meeting notices as required by the Colorado Open Meetings Law. The City Clerk shall be responsible for posting the required notices no later than twenty-for (24) hours prior to the holding of the meeting. All meeting notices shall include specific agenda information, where possible.

RESOLVED AND PASSED this 10th day of December, 2014.

_____
David D. Spellman, Mayor

ATTEST:

_____
Melissa Greiner, City Clerk

CITY OF BLACK HAWK
REQUEST FOR COUNCIL ACTION

SUBJECT: Establishing a designated public place for the posting of 2015 Meeting Notices as required by the Colorado Open Meeting Law

RECOMMENDATION: Staff recommends the following motion to the Mayor and Board of Aldermen:

MOTION TO APPROVE Resolution 99-2014 Establishing a designated public place for the posting of 2015 Meeting Notices as required by the Colorado Open Meeting Law

SUMMARY AND BACKGROUND OF SUBJECT MATTER:

AGENDA DATE: December 10, 2014

WORKSHOP DATE: N/A

FUNDING SOURCE: N/A

DEPARTMENT DIRECTOR APPROVAL: [X]Yes [ ]No

STAFF PERSON RESPONSIBLE: Melissa Greiner, City Clerk

DOCUMENTS ATTACHED: N/A

RECORD: [ ]Yes [X]No

CITY ATTORNEY REVIEW: [ ]Yes [X]N/A

SUBMITTED BY: **REVIEWED BY:**

Melissa Greiner Jack D Lewis

Staff Name, Staff Title Jack D. Lewis, City Manager

RESOLUTION 100-2014

A RESOLUTION AUTHORIZING THE PLACEMENT OF A VETERANS' MEMORIAL PLAQUE AT DORY HILL CEMETERY

STATE OF COLORADO
COUNTY OF GILPIN
CITY OF BLACK HAWK

Resolution No. 100-2014

TITLE: A RESOLUTION AUTHORIZING THE PLACEMENT OF A VETERANS' MEMORIAL PLAQUE AT DORY HILL CEMETERY

NOW, THEREFORE, BE IT RESOLVED BY THE BOARD OF ALDERMEN OF THE CITY OF BLACK HAWK, COLORADO, THAT:

Section 1. The City Council hereby authorizes the placement of a plaque at Dory Hill Cemetery by the Mountain Rendezvous Chapter of the Daughters of the American Revolution honoring the deceased veterans interred at the Dory Hill Cemetery.

RESOLVED AND PASSED this 10th day of December, 2014.

_____
David D. Spellman, Mayor

ATTEST:

_____
Melissa Greiner, City Clerk

CITY OF BLACK HAWK
REQUEST FOR COUNCIL ACTION

SUBJECT: Placement of a Veteran's Memorial Plaque at Dory Hill Cemetery by the Mountain Rendezvous Chapter of the Daughters of the American Revolution

RECOMMENDATION: Staff recommends the following motion to the Mayor and Board of Aldermen:

MOTION TO APPROVE Resolution 100-2014, A Resolution Authorizing the Placement of a Veterans' Memorial Plaque at Dory Hill Cemetery.

SUMMARY AND BACKGROUND OF SUBJECT MATTER:

AGENDA DATE: December 10, 2014

WORKSHOP DATE: N/A

FUNDING SOURCE: N/A

DEPARTMENT DIRECTOR APPROVAL: [X]Yes [ ]No

STAFF PERSON RESPONSIBLE: Melissa Greiner, City Clerk

DOCUMENTS ATTACHED: Memo from Kay Lorenz on behalf of the Mountain Rendezvous Chapter of the Daughters of the American Revolution

RECORD: [ ]Yes [X]No

CITY ATTORNEY REVIEW: [X]Yes [ ]N/A

SUBMITTED BY: **REVIEWED BY:**

Melissa Greiner

Staff Name, Staff Title

Jack D. Lewis, City Manager

TO: City of Black Hawk

FROM: Kay Lorenz

DATE: October 29, 2014

RE: Veteran Cemetery Plaque

The Mountain Rendezvous Chapter of the Daughters of the American Revolution would like to put a plaque at Dory Hill Cemetery honoring the deceased veterans who are interred there.

Our original intent was to provide flags at the veteran graves. Research has convinced us that because some of the markers do not list veteran information we would miss someone. Others organizations such as BPOE 557 do put out flags as well with the names that they see.

I have created a list of deceased veterans in all Gilpin County cemeteries using previous work done. The internet for military has also been helpful as well as individuals with knowledge of veteran graves that show no military information. Kathleen Schrader and I have also walked each cemetery and photographed graves with military markings. This list has been shared with Black Hawk staff.

Our plaque wording is being reviewed now by DAR. No one name is there only our acknowledgement and gratitude for their service. So far it is to be a black metal sign with gold letters and approximately the size of a sheet of paper. (8 1/2 X 11). Each year Mountain Rendezvous Chapter would like to pick a different cemetery.

We would like permission to start with Dory Hill Cemetery. Please advise if the City of Black Hawk would allow us to do this and any guidelines that would apply. All costs related to this project will be paid by DAR.

Thank you for considering our request. If there are any questions I can be reached at 303-642-3810 or leave a message and I will return the call.

RECEIVED

OCT 29 2014

City of Black Hawk
Administrative Services

RESOLUTION 101-2014

A RESOLUTION APPROVING THE AGREEMENT FOR THE MANAGEMENT AND OPERATION OF THE TRANSPORTATION SERVICES FOR THE BLACK HAWK TRAMWAY BETWEEN MV PUBLIC TRANSPORTATION AND THE CITY OF BLACK HAWK

STATE OF COLORADO
COUNTY OF GILPIN
CITY OF BLACK HAWK

Resolution No. 101-2014

TITLE: A RESOLUTION APPROVING THE AGREEMENT FOR THE MANAGEMENT AND OPERATION OF THE TRANSPORTATION SERVICES FOR THE BLACK HAWK TRAMWAY BETWEEN MV PUBLIC TRANSPORTATION AND THE CITY OF BLACK HAWK

NOW, THEREFORE, BE IT RESOLVED BY THE BOARD OF ALDERMEN OF THE CITY OF BLACK HAWK, COLORADO, THAT:

Section 1. The Agreement for the Management and Operation of the Transportation Services for the Black Hawk Tramway between MV Public Transportation and the City of Black Hawk, attached hereto as **Exhibit A**, is hereby approved, and the Mayor is authorized to execute the same on behalf of the City.

RESOLVED AND PASSED this 10th day of December, 2014.

_____
David D. Spellman, Mayor

ATTEST:

_____
Melissa Greiner, City Clerk

CITY OF BLACK HAWK

REQUEST FOR COUNCIL ACTION

SUBJECT: Execute the agreement with MV Public Transportation to provide the Management and Operation of the Transportation Services for the Black Hawk Tramway.

RECOMMENDATION:
If City Council chooses to approve Resolution 101-2014, the recommended motion is as follows: "Approve Resolution 101-2014, A Resolution Approving the Agreement for the Management and Operation of the Transportation Services for the Black Hawk Tramway between MV Public Transportation and the City of Black Hawk"

SUMMARY AND BACKGROUND OF SUBJECT MATTER:
The City utilizes a subcontractor to provide the driver team for the Tramway operations. MV Public Transportation has been successfully providing this service to the City for several years. The new agreement was negotiated to include options to renew for the subsequent four years subject to appropriation and both parties wishing to continue the relationship. The agreement would hold the costs for 2015 the same as 2014. The following years would each have a 2.7% increase.

Staff has had good success with the driver team MV has provided and we have some long term drivers up here for our service. Staff is recommending approval of the agreement.

FUNDING SOURCE: 010-3105-431-58-10 Contracted Bus Service

WORKSHOP DATE: 10-Dec-14

ORIGINATED BY: Tom Isbester

STAFF PERSON RESPONSIBLE: Tom Isbester

PROJECT COMPLETION DATE: December 31, 2015

DOCUMENTS ATTACHED: resolution & agreement

CITY ATTORNEY REVIEW: [ ]Yes [ ]No [ ]N/A INITIALS_____

SUBMITTED BY:

_____
Thomas Isbester, Public Works Director

REVIEWED BY:

_____
Jack D. Lewis, City Manager

AGREEMENT FOR THE MANAGEMENT AND OPERATION OF THE TRANSPORTATION SERVICES FOR THE BLACK HAWK TRAMWAY

This Agreement is entered into this _____ day of _____, 20___ by and between the City of Black Hawk, a municipal corporation and political subdivision of the State of Colorado (the "City") and MV Public Transportation, Inc., a California corporation in good standing in the State of Colorado (the "Contractor").

WHEREAS, the City desires to contract with the Contractor to operate its transportation system, and

WHEREAS, Contractor has the technical expertise necessary to manage and operate City's transportation system,

NOW THEREFORE, in consideration for the mutual promises herein, the parties agree as follows:

1. Term/Termination.

1.1. Term. This Agreement shall commence for a twelve-month period starting January 1, 2015, and ending December 31, 2015, unless sooner terminated as set forth below. The City and the Contractor may agree to extend this Agreement for four additional one-year periods based on the attached Exhibit C, with each extension to be exercised on an annual basis at the discretion of the City and the Contractor and subject to annual appropriation. Failure to achieve cost reconciliation in any given year will result in termination of the Agreement.

1.2. Termination. Either party hereto has the right to terminate this Agreement at any time, with or without cause, and without further liability, upon ninety (90) days written notice to the other party. The parties may also terminate the Agreement, upon two (2) weeks written notice, if the necessary funding to operate their respective services becomes unavailable because of circumstances beyond their control.

2. Scope of Work.

In accordance with federal and state law, and the standards set forth herein, Contractor shall provide transportation service to the general public.

2.1 Scope. Contractor's Scope of Work shall be referred to as "Exhibit A," which is attached hereto and by this reference incorporated herein. The services described in Exhibit A, together with the terms set forth in this Agreement, shall constitute all of the work to be provided by Contractor under the terms of this Agreement. Contractor and City specifically contemplate that Contractor shall strictly abide by the terms and conditions set forth in subsection A.16 of Exhibit A.

2.2 General Public. In accordance with the work set forth in Exhibit A, transportation service shall be available to the general public. Transportation service may operate on a modified fixed route with checkpoint deviation to provide equivalent service as required under the Americans with Disabilities Act of 1990 ("ADA").

2.3 Compliance Requirements. Contractor will provide service subject to the requirements of the ADA and the drug and alcohol program requirements of 49 C.F.R. Parts 40 and 655.

3. Compensation.

3.1. Rates. The rates for the term of this Agreement are based on the rates provided by the Contractor and accepted by the City as shown in Exhibit C. The rate will include the Fixed Cost per Month plus the Variable Cost per Hour based on the actual hours of operation.

3.2. Invoices. Contractor shall invoice City on a monthly basis for the services provided. Contractor shall submit invoices to City by the 10th day of the month for the previous month's service.

3.3. Payment Terms. City shall pay Contractor within 30 days of receipt of Contractor's Invoice.

3.3.1. Disputed Invoices. In the event City disputes any portion of Contractor's invoice, City shall notify Contractor in writing within fourteen (14) days of receipt of Contractor's invoice. City shall pay the undisputed portion of the invoice within thirty (30) days of receipt of Contractor's invoice.

3.3.2. Dispute Resolution. Contractor and City shall meet within fourteen (14) days of Contractor's receipt of City's notice of disputed invoice to negotiate a resolution to the dispute.

4. Service Requirements.

4.1. Reporting. Contractor shall report to City monthly the following statistics: Total hours; total miles; accidents; threatened litigation or claims; and number of passengers transported on a daily basis (the "Monthly Report").

4.2. Fares. Any fares collected from passengers at the request for the City shall deposited into City's bank account and noted on the Monthly Report.

4.3. Changes in Service. Upon City's reasonable request and advance notice of no less than two (2) weeks, Contractor shall make modification to routes and schedules. Compensation will be adjusted as shown in Exhibit B.

4.4. Driver Documents and Inspection. Contractor will have on file and to the extent permitted by law shall, upon request, make available to City the following documentation for each driver retained to perform services under this Agreement:

4.4.1. Proof of valid driver's license;

4.4.2. Current Department of Motor vehicle record report; and

4.4.3. Audit testing record to verify compliance with FTA Drug and Alcohol Testing.

5. Accident and Incident Reporting.

5.1. Reporting Accidents and Incidents. Contractor shall report all accidents and incidents involving or resulting from its services by providing City a copy of the incident/accident report(s) submitted by drivers to Contractor, or through other mutually acceptable forms. Contractor shall require any driver involved in any incident or accident while engaged in the services contemplated by this Agreement to provide a report of such incident or accident to Contractor. For this Agreement, "accident" means vehicle damage (excluding purely mechanical failure) that requires towing from the scene, and/or damage resulting in law enforcement agencies responding to the scene. For this Agreement, "incident" refers to injuries to and/or complaints from passengers or others, whether in connection with an accident or not.

5.2. Law Enforcement Reports from Contractor. Contractor shall request a copy of any incident or accident report prepared by law enforcement officers. Contractor shall promptly provide City with a copy of all reports regarding Contractor's incidents or accidents in which a vehicle is involved. Such reports shall be submitted to City within twenty-four hours of Contractor's receipt of the report.

5.3. Contractor Internal Reports. Copies of incident and accident reports involving vehicles, drivers, and/or passengers, prepared by the Contractor, shall be provided to City within twenty-four hours of Contractor's preparation or receipt of the report.

6. Liability and Indemnification.

6.1. Intent. It is not the intent of either party to incur liability for the negligent operations, acts, or omissions of the other party or its agents or employees. Rather, as set forth hereinafter, each of the parties hereto assumes full responsibility for the negligent operations, acts, and omissions of its own employees, agents, contractors, and licensees, and each party hereto seeks indemnification only against the negligent operation, acts, and omissions of the employees, agents or contractors of the other party.

6.2. Contractor. Contractor agrees and acknowledges that it is responsible for any and all liabilities, obligations, damages, penalties, claims, costs and expenses, including, without limitation, reasonable attorney's fees, paid or incurred as the result of or in connection with (i) any breach by Contractor, its agents, subcontractors, employees, or licensees, of any covenant or condition of this Agreement, or (ii) the carelessness, negligence or improper conduct of Contractor, its agents, subcontractors, employees, or licensees. To the full extent allowed by law, if any action or proceeding is brought against City, by reason of any such claim, upon written notice from City, Contractor shall, at its own expense, resist or defend such action or proceeding with counsel approved by City in writing and Contractor shall indemnify and hold harmless the City from and against any such claim or judgment resulting therefrom.

7. **INSURANCE**

7.1. Forms & Amounts. Contractor shall carry insurance, and provide written proof thereof to City, in the following minimum amounts:

7.1.1. Workers' Compensation. Contractor shall provide workers' compensation insurance or shall undertake a program of self-insurance pursuant to the laws of the State of Colorado.

7.1.2. Comprehensive General Liability. Contractor shall maintain coverage of not less than $5,000,000.00 per occurrence for personal injury and property damage liability. Such liability shall contain provision insuring the contractual liability.

7.1.3. Automobile. Contractor shall maintain a Comprehensive Automobile Insurance Policy written on an occurrence basis, in a form and substance reasonably acceptable to the City. The Comprehensive Automobile Insurance Policy must provide coverage for all owned, hired, rented and non-owned automobiles, and shall include Automobile Physical Damage. The Comprehensive Automobile Insurance Policy must be written with a combined single limit of liability for not less than $5,000,000.00 for each occurrence of bodily injury and/or property damage.

7.2. Additional Insured. To the extent allowed by Colorado law, all Contractor's insurance policies required or provided for by this Agreement shall name the City of Black Hawk, Colorado as additional insured.

7.3. Primary. The insurance policies required by the terms of this Agreement shall be primary and non-contributory in relation to any other insurance that may apply, for operations performed by or on behalf of Contractor.

7.4. Cancellation & Notice. Should any of the above-described policies be canceled before the expiration date thereof, the issuing company shall so notify City in writing at least 30 days in advance of such cancellation or expiration. The certificates of insurance for the above-described policies shall include at least a 30-day notice of cancellation clause.

8. ADDITIONAL TERMS AND CONDITIONS

8.1. Limitation of Funding. Service is contingent upon funds available to and appropriated by City at its sole discretion. In the event that funding is eliminated or decreased, City reserves the right to terminate or modify this Agreement accordingly.

8.2. Independent Contractor. In performing under this Agreement, Contractor shall act at all times as an independent contractor. Nothing contained in this Agreement shall be construed or applied to create the relationship of principal and agent, or of employer and employee, between Contractor and City. Employees of Contractor shall not under any circumstances be considered employees of City.

8.3. Subcontracts. Contractor shall not enter into subcontracts for the performance of the duties and responsibilities of the Contractor identified in Exhibit A without the prior written consent of City.

8.4. Assignment of Interests. Neither this Agreement nor any interest herein shall be assigned or transferred by Contractor without authorization in writing by the City. Such consent shall not release Contractor from its liability for the performance of the obligations of this Agreement unless otherwise specifically agreed in writing.

8.5. Force Majeure. Either party shall be excused from performing its obligations under this Agreement during the time and to the extent that it is prevented from performing by a cause beyond its control, including, but not limited to: any incident of fire, flood, or strike; acts of God; acts of the federal or state Government; war or civil disorder; violence or the threat thereof; commandeering of material, products, plants, or facility by the Federal or state government; or national or local fuel shortage. Performance shall be excused when satisfactory evidence of such cause is presented to the other party, and provided further that such nonperformance is beyond the reasonable control of, and is not due to the fault or negligence of the party not performing.

8.6. Audit. The records, books, documents, data, and accounting and operating procedures as related specifically to the performance of this Agreement are subject to audit and examination by the City and its representatives, the U.S. Department of Transportation, the Comptroller General of the United States, and the State of Colorado for three (3) years from the date of final payment under this Agreement. Such audit shall be conducted after reasonable notice to Contractor and at Contractor's account center in Colorado where such records shall be maintained.

8.7. Severability. If any provision of this Agreement is declared or determined to be unlawful, invalid or unconstitutional, such declaration shall not affect, in any manner, the legality of the remaining provisions of the Agreement; and each provision of the Agreement shall be and is deemed to be separate and severable from each other provision.

8.8. Modification. Any provision of this Agreement may be modified, changed, altered or deleted, either temporarily or permanently, upon written agreement between the City and Contractor.

8.9. Disputes. Administrative disputes arising out of this Agreement between employees and staff of the City and/or Contractor shall first be taken to the chief executive officers of the parties to this Agreement for the purpose of attempting in good faith to resolve the dispute. If the parties cannot resolve the dispute, they may appoint a mediator to resolve the dispute. If the parties do not agree to mediation or on a mediator, they shall have the right to pursue all remedies permitted by law. In the event either party retains the services of an attorney to enforce any of the provisions of this Agreement, the prevailing party shall be entitled to recover its reasonable attorney's fees, costs and expenses.

8.10. Jurisdiction and Venue. This Agreement and all documents associated with this Agreement shall be construed and interpreted in accordance with the law of the State of Colorado. City and Contractor hereby consent and submit to the exclusive jurisdiction of the Gilpin County District Court of the State of Colorado for adjudication of any suit, right or cause of action arising under or in connection with this Agreement.

8.11. Notices. Any notices required to be given pursuant to the terms and provisions of this Agreement shall be in writing and may be either personally delivered or sent by registered or certified mail in the United States Postal Service, Return Receipt Requested, postage prepaid, addressed to each party at the addresses which follow or to such other addresses as the parties may hereinafter designate in writing:

City: City of Black Hawk
Attn: Public Works Director
PO Box 68
987 Miners Mesa Road
Black Hawk, CO 80422

cc: Corey Hoffmann
Hayes, Phillips, Hoffmann & Carberry, P.C.
1530 Sixteenth Street, Suite 200
Denver, CO 80202-1468

Contractor: MV Public Transportation, Inc.
Attn: Office of the General Counsel
5910 N Central Expressway, Suite 1145
Dallas, TX 75206

cc: MV Public Transportation, Inc.
Attn: Doug Gies
5910 N Central Expressway, Suite 1145
Dallas, TX 75206

Any such notice shall be deemed to have been given, if mailed as provided herein, as of the date mailed.

8.12 Illegal Alien Workers. Contractor shall not knowingly employ or contract with an illegal alien to perform work under the Agreement or contract with a subcontractor who knowingly employs or contracts with an illegal alien to perform work under the Agreement. Execution of this Agreement by Contractor shall constitute a certification by Contractor that it does not knowingly employ or contract with any illegal alien and that Contractor has participated or attempted to participate in the Basic Pilot Employment Verification Program administered by the United States Department of Homeland Security, ("Basic Pilot Program") in order to confirm the employment eligibility of all employees who are newly hired for employment in the United States.

8.12.1 Contractor shall:

8.12.1.1 Confirm or attempt to confirm the employment eligibility of all employees who are newly hired for employment in the United States through participation in the Basic Pilot Program. Contractor shall apply to participate in the Basic Pilot Program every three months until all Contractor requirements under this Agreement are completed or until Contractor is accepted into the Basic Pilot Program, whichever occurs earlier.

8.12.1.2 Not utilize the Basic Pilot Program procedures to independently undertake pre-employment screening of job applicants.

8.12.1.3 Require any subcontractor to certify that the subcontractor will not knowingly employ or contract with an illegal alien to perform work under the Agreement. If Contractor obtains actual knowledge that a subcontractor

performing work under the Agreement knowingly employs or contracts with an illegal alien Contractor shall:

8.12.1.3.1 Notify the subcontractor and City within three (3) days that Contractor has actual knowledge that the subcontractor is employing or contracting with an illegal alien; and

8.12.1.3.2 Terminate the subcontract with the subcontractor if within three (3) days of receiving notice from Contractor, the subcontractor does not stop employing or contracting with the illegal alien; except that Contractor shall not terminate the contract with the subcontractor if during such three (3) days the subcontractor provides information to establish that the subcontractor has not knowingly employed or contracted with an illegal alien.

8.12.1.4 Comply with any reasonable request by the Department of Labor and Employment ("Department") made in the course of an investigation by the Department.

8.12.2 If Contractor violates any provision of this Section, City may terminate the Agreement immediately, Contractor shall be liable to City for City's actual and consequential damages resulting from such termination, and City shall report such violation by Contractor to the Colorado Secretary of State as required by law.

9. ENTIRE AGREEMENT

This Agreement and the attached exhibits constitute the entire Agreement between Contractor and the City, superseding all prior oral or written communications. None of the provisions of this Agreement may be amended, modified, or changed, except as specified herein.

IN WITNESS WHEREOF, the parties hereto each herewith subscribe the same in duplicate.

CITY OF BLACK HAWK, COLORADO

By: _____
David D. Spellman, Mayor

ATTEST:

_____
Melissa Greiner, City Clerk

APPROVED AS TO FORM:

_____
Corey Y. Hoffmann, City Attorney

MV Public Transportation, Inc..

By: _____
David B. Brown

Its: Interim CFO

STATE OF ~~COLORADO~~ TEXAS)
) ss.
COUNTY OF DALLAS)

The foregoing instrument was subscribed, sworn to, and acknowledged before me this 18 day of November, 20 14, by DAVID B. BROWN as the Interim CFO of MV Public Transportation, Inc.

My commission expires: 9-12-2017

(S E A L)

Bobbie Crowder Scott
Notary Public

BOBBIE CROWDER SCOTT
Notary Public, State of Texas
My Commission Expires
September 12, 2017

PROSPECTIVE CONTRACTOR'S CERTIFICATE REGARDING EMPLOYING OR CONTRACTING WITH AN ILLEGAL ALIEN

FROM: MV Public Transportation, Inc.
(Prospective *Contractor*)

TO: City of Black Hawk
P.O. Box 68
Black Hawk, Colorado 80422

Project Name Management & Operation of the Transportation Services for the Black Hawk Tramway

Bid Number _____ Project No. _____

As a prospective Contractor for the above-identified bid, I (we) do hereby certify that, as of the date of this certification, I (we) do not knowingly employ or contract with an illegal alien who will perform work under the Agreement and that I (we) will confirm the employment eligibility of all employees who are newly hired for employment to perform work under the Agreement through participation in either the E-Verify Program administered by the United States Department of Homeland Security and Social Security Administration or the Department Program administered by the Colorado Department of Labor and Employment.

Executed this 18 day of November, 2014

Prospective Contractor MV Public Transportation, Inc.

By: _____
David B. Brown

Title: Interim CFO

NO EMPLOYEE AFFIDAVIT

1. Check and complete one:

☐ I, _____, am a sole proprietor doing business as _____. I do not currently employ any individuals. Should I employ any individuals during the term of my Agreement with the City, I certify that I will comply with the lawful presence verification requirements outlined in that Agreement.

OR

☐ I, _____, am an owner/member/shareholder of _____, a _____[specify type of entity-*i.e,* corporation, limited liability company], that does not currently employ any individuals. Should I employ any individuals during the term of my Agreement with the City, I certify that I will comply with the lawful presence verification requirements outlined in that Agreement.

2. Check one.

☐ I, _____, am a United States citizen or legal permanent resident.

The City must verify this statement by reviewing one of the following items:

- *A valid Colorado Driver's license or a Colorado identification card*
- *A United States military card or a military dependent's identification card*
- *A United States Coast Guard Merchant Mariner card*
- *A Native American tribal document or*
- *In the case of a resident of another state, the driver's license or state-issued identification card from the state of residence, if that state requires the applicant to prove lawful presence prior to the issuance of the identification card*
- *Any other documents or combination of documents listed in the City's "Acceptable Documents for Lawful Presence Verification" chart that prove both the contractor's citizenship/lawful presence <u>and</u> identity.*

OR

☐ I am otherwise lawfully present in the United States pursuant to federal law.

Contractor must verify this statement through the federal systematic alien verification of entitlement program, the "SAVE" program, and provide such verification to the City.

_____ _____

Signature Date

DEPARTMENT PROGRAM AFFIDAVIT

(To be completed if Contractor participates in the Department of Labor Lawful Presence Verification Program)

I, MV Public Transportation, Inc, as a public contractor under contract with the City of Black Hawk (the "City"), hereby affirm that:

1. I have examined or will examine the legal work status of all employees who are newly hired for employment to perform work under this public contract for services ("Contract") with the Town within twenty (20) days after such hiring date;

2. I have retained or will retain file copies of all documents required by 8 U.S.C. § 1324a, which verify the employment eligibility and identity of newly hired employees who perform work under this Contract; and

3. I have not and will not alter or falsify the identification documents for my newly hired employees who perform work under this Contract.

Contractor Signature David B. Brown

Date 11/18/14

STATE OF ~~COLORADO~~ TEXAS)
) ss.
COUNTY OF DALLAS)

The foregoing instrument was subscribed, sworn to and acknowledged before me this 18 day of Nov, 2014, by David B. Brown as Interim CFO of MV Transportation.

My commission expires:

(S E A L)

Notary Public

BOBBIE CROWDER SCOTT
Notary Public, State of Texas
My Commission Expires
September 12, 2017

ACCEPTABLE DOCUMENTS FOR LAWFUL PRESENCE VERIFICATION

Documents that Serve to Prove Citizenship/Lawful Presence and Identification:

- Colorado Driver's License or Identification Card
- Out of State drivers license from: AL, AZ, AR, CA, CT, DE, DC, FL, GA, ID, IN, IA, KS, KY, LA, ME, MN, MS, MO, MT, NV, NH, NJ, NY, ND, OH, OK, PA, RI, SC, SD, VA, WV, WY
- A United States Military Card of a Military Dependent's Identification Card
- A United States Coast Guard or Merchant Mariner Card
- A Native American Tribal Document
- Certificate of Naturalization with Photograph
- Certificate of U.S. Citizenship with Photograph
- U.S. Passport (less than 5 years old)
- Northern Mariana Identification Card with Photograph

OR

Documents that Only Serve to Prove Citizenship/Lawful Presence:

- U.S. Birth Certificate
- Certification of Report of Birth from Department of State
- Report of Birth Abroad of a U.S. Citizen
- U.S. Citizen Identification Card
- Final Adoption Decree
- Evidence of U.S. Civil Service Employment before June 1, 1976
- Statement Provided by U.S. Consular Officer Certifying Citizenship
- Religious Records Recorded in the 50 states, D.C., or a U.S. Territory Showing Birth Date or Child's Age and Location of Birth in U.S.
- Early School Records
- Census Records
- Other Documents that Establish a U.S. Place of Birth or in Some Way Indicates U.S. Citizenship

AND

Documents that Serve to Prove Identification:

- A Driver's License or Identification Card Regardless of the State of Issuance
- School Identification Card with Photograph
- Identification Card Issued by Federal, State or Local Government
- A Driver's License Issued by a Canadian Government Authority

EXHIBIT A

SCOPE OF WORK

A.1 HOURS OF SERVICE. Passengers will be picked up at points designated by the City along the service route during the service hours defined in the Operations Profile exhibit B.

A.2 DAYS OF SERVICE. Service will be provided seven days per week, 365 days per year.

A.3 RIDE TIME. The scheduled route is anticipated to be no longer than 20 minutes in length under normal weather conditions for the Black Hawk Tramway.

A.4 SERVICE AREA. The City of Black Hawk or as directed by the City.

A.5 FARES. Fares are not currently collected. If a fare is set by the City, City will provide Contractor with fare boxes to be used in collecting fares.

A.6 PASSENGER ASSISTANCE. Contractor shall assist passengers on and off the bus as needed.

A.7 INCLEMENT WEATHER. In the event that weather conditions are such that service must be suspended temporarily to ensure the safety of the passengers and drivers, the Contractor shall immediately contact the Black Hawk Public Works Director or designee. Contractor shall make best efforts to notify casino management and passengers of weather related delays to the service.

A.8 COMPLAINTS. The Contractor shall make written record of all complaints from passengers and other relating to the service provided herein. Contractor shall investigate all complaints and, within fourteen (14) days following actual receipt of complaint, provide a written response to the person making the complaint and shall provide a copy of the complaint and the response to City.

A.9 DRIVERS. Contractor shall employ drivers duly licensed by the State of Colorado to transport the passengers provided for under this Agreement.

- A.9.1 Contractor shall train all drivers in accordance with Contractor's training program for drivers providing similar transit services.
- A.9.2 All drivers will be trained in accordance with the federal laws and the laws of the State of Colorado.
- A.9.3 Contractor shall comply with drug and alcohol screening requirements of all employees in safety sensitive positions in compliance with federal law.
- A.9.4 All drivers shall wear a uniform issued by the Contractor at all times while in service, and shall, at all times when visible to bus passengers, be neatly groomed and dressed.
- A.9.5 The Contractor shall have the exclusive right to hire, train and terminate drivers

and other Contractor personnel. The City shall have the option to request the Contractor assign drivers to other contract service based on the need to maintain customer service levels consistent with a resort community.

A.9.6 Drivers shall be trained in and practice appropriate radio communications.
A.9.7 Contractor will schedule meeting with driver team and fleet shop staff once every quarter to discuss common issues and procedures.
A.9.8 Contractor will provide City summary of driver training every six months.
A.9.9 From time to time, but no more often than quarterly, the City may request, at City's expense, that drivers perform a survey of passengers to see if passengers are satisfied with the service, to discuss methods of improvement, and such other matters as the City may request. Contractor, at City's expense, may be asked to provide such reports concerning the results of the surveys as the City may reasonably require.
A.9.10 When requested, contractor will complete ridership counts, by stop, and report the results to the City.

A.10 VEHICLES PROVIDED BY CITY. City supplied transportation equipment must be lift equipped passenger transportation vehicles that are ADA Accessible and licensed in the State of Colorado. . The primary vehicles shall have a minimum capacity to transport twenty-four ambulatory and two passengers in standard wheelchairs at the same time. A light duty transit bus, commonly referred to as a "cutaway" style, may be used as a backup vehicle.

A.10.1 Contractor shall not materially alter the appearance or operation of the City's buses.
A.10.2 Contractor shall ensure the City buses it operates are neat, clean and properly maintained to assure the safety and comfort of all passengers.
A.10.3 Contractor shall maintain required insurance coverages as set forward in 7.1.3

A.11 MAINTENANCE. All maintenance will be provided for and scheduled by the City of Black Hawk Fleet Shop.

A.12 FUEL. City will provide fuel for vehicles.

A.13 FACILITIES. City will provide Contractor free of charge parking facilities for the buses and employees at Miner's Mesa. City shall be responsible for the general cleaning and upkeep of all transit shelters and the parking facilities. Contractor shall be responsible for the general cleaning and upkeep of all areas used by their employees.

A.14 QUALITY STANDARDS. In addition to all other federal state and local transit agency requirements, the following quality standards shall apply to the Contractor:

A.14.1 Contractor will provide prompt and timely service in accordance with the schedule in the Agreement.
A.14.2 Contractor drivers will be courteous and respectful to all passengers at all times.
A.14.3 Contractor drivers shall contact the local law enforcement agency rather than deal

directly with a disruptive passenger.

A.14.4 Contractor drivers shall obey all traffic laws of the State of Colorado, Gilpin County and City of Black Hawk.

A.15 LICENSES AND PERMITS. During the term of this agreement, Contractor shall obtain all necessary licenses and permits required to operate a public transit service. All Contractor drivers shall obtain and maintain a current Commercial Driver's License with passenger endorsement.

A.16 SPECIAL TERMS AND CONDITIONS FOR FEDERAL TRANSIT ADMINISTRATION REGULATIONS. The following terms and conditions are intended specifically to ensure compliance with all applicable Federal Transit Administration Regulations.

1. Charter Service Operations. Contractor agrees to comply with 49 U.S.C. § 5323(d) and 49 C.F.R. Part 604, which provide that recipients and subrecipients of FTA assistance are prohibited from providing charter service using federally funded equipment or facilities if there is at least one private charter operator willing and able to provide the service, except under one of the exceptions at 49 C.F.R. § 604.9. Any charter service provided under one of the exceptions must be "incidental," i.e., it must not interfere with or detract from the provision of mass transportation.

2. School Bus Operations. Pursuant to 69 U.S.C. § 5323(f) and 49 C.F.R. Part 605, recipients and subrecipients of FTA assistance may not engage in school bus operations exclusively for the transportation of students and school personnel in competition with private school bus operators unless qualified under specified exemptions. When operating exclusive school bus service under an allowable exemption, recipients and subrecipients may not use federally funded equipment, vehicles, or facilities.

3. Energy Conservation. Contractor agrees to comply with mandatory standards and policies relating to energy efficiency which are contained in the state energy conservation plan issued in compliance with the Energy Policy and Conservation Act.

4. Clean Water.

(1) In conjunction with the work contemplated and performed under this Agreement, Contractor agrees to comply with all applicable standards, orders or regulations issued pursuant to the Federal Water Pollution Control Act, as amended, 33 U.S.C. § 1251 *et seq*. Contractor agrees to report each violation to the City and understands and agrees that the City will, in turn, report each violation as required to assure notification to FTA and the appropriate EPA Regional Office. Contractor and the City recognize that all bus cleaning and maintenance will be City's responsibility, and thus Contractor's obligations under the Clean Water Act may be negligible.

(2) Contractor also agrees to include these requirements in each subcontract exceeding $100,000 financed in whole or in part with Federal assistance provided by FTA.

5. Restriction on Lobbying. Contractors who apply or submit proposals for an award of $100,000 or more shall file the certification required by 49 C.F.R. Part 20, "New Restrictions on Lobbying." Each tier certifies to the tier above that it will not and has not used Federal appropriated funds to pay any person or organization for influencing or attempting to influence an officer or employee of any agency, a member of Congress, officer or employee of Congress, or an employee of a member of Congress in connection with obtaining any Federal contract, grant or any other award covered by 31 U.S.C. § 1352. Each tier shall also disclose the name of any registrant under the Lobbying Disclosure Act of 1995 who has made lobbying contacts on its behalf with non-Federal funds with respect to that Federal contract, grant or award covered by 31 U.S.C. § 1352. Such disclosures are forwarded from tier to tier up to the recipient.

6. Access to Records. Because the City is a local government and is a FTA Recipient or a subgrantee of the FTA Recipient in accordance with 49 C.F.R. § 18.36(i), the Contractor agrees to provide the City, the FTA Administrator, the Comptroller General of the United States or any of their authorized representatives access to any books, documents, papers and records of the Contractor which are directly pertinent to the Agreement for the purposes of making audits, examinations, excerpts and transcriptions. Contractor also agrees, pursuant to 49 C.F.R. § 633.17 to provide the FTA Administrator or his authorized representatives including any PMO Contractor access to Contractor's records and construction sites pertaining to a major capital project, defined at 49 U.S.C. § 5302(a)1, which is receiving federal financial assistance through the programs described at 49 U.S.C. §§ 5307, 5309 or 5311.

Contractor agrees to permit any of the foregoing parties to reproduce by any means whatsoever or to copy excerpts and transcriptions as reasonably needed.

Contractor agrees to maintain all books, records, accounts and reports required under this contract for a period of not less than three years after the date of termination or expiration of the Agreement, except in the event of litigation or settlement of claims arising from the performance of the Agreement, in which case Contractor agrees to maintain same until the City, the FTA Administrator, the Comptroller General, or any of their duly authorized representatives, have disposed of all such litigation, appeals, claims or exceptions related thereto. Reference 49 C.F.R. § 18.39(i)(11).

7. Federal Changes. Contractor shall at all times comply with all applicable FTA regulations, policies, procedures and directives, including without limitation those listed directly or by reference in the Master Agreement between City and FTA, as they may be amended or promulgated from time to time during the term of the Agreement. Contractor's failure to so comply shall constitute a material breach of the Agreement.

8. Warranty of the Work and Maintenance Bonds. Contractor warrants to City that all materials and equipment furnished under the Agreement will be of highest quality and new unless otherwise specified by City, free from faults and defects and in conformance with the Agreement. All work not so conforming to these standards shall be considered defective. If required by the Public Works Director, Contractor shall furnish satisfactory evidence as to the kind and quality of materials and equipment.

9. Clean Air. In conjunction with the work contemplated and performed under this Agreement, Contractor agrees to comply with all applicable standards, orders or regulations issued pursuant to the Clean Air Act, as amended, 42 U.S.C. § 7401 et seq. Contractor agrees to report each violation to the City and understands and agrees that the City will, in turn, report each violation as required to assure notification to FTA and the appropriate EPA Regional Office. Contractor and the City recognize that all bus cleaning and maintenance will be City's responsibility, and thus Contractor's obligations under the Clean Air Act may be negligible.

10. No Obligation by the Federal Government.

(1) The City and Contractor acknowledge and agree that, notwithstanding any concurrence by the Federal Government in or approval of the solicitation or award of the underlying contract, absent the express written consent by the Federal Government, the Federal Government is not a party to the Agreement and shall not be subject to any obligations or liabilities to the City, Contractor, or any other party (whether or not a party to the Agreement) pertaining to any matter resulting from the Agreement.

(2) Contractor also agrees to include these requirements in each subcontract exceeding $100,000 financed in whole or in part with Federal assistance provided by FTA.

11. Program Fraud and False or Fraudulent Statements or Related Acts.

(1) Contractor acknowledges that the provisions of the Program Fraud Civil Remedies Act of 1986, as amended, 31 U.S.C. § 3801 et seq. and U.S. DOT regulations, "Program Fraud Civil Remedies," 49 C.F.R. Part 31, apply to its actions pertaining to the Agreement. Upon execution of the Agreement, Contractor certifies or affirms the truthfulness and accuracy of any statement it has made, it makes, it may make, or causes to be made, pertaining to the underlying contract or the FTA assisted project for which this contract work is being performed. In addition to other penalties that may be applicable, Contractor further acknowledges that if it makes, or causes to be made, a false, fictitious, or fraudulent claim, statement, submission, or certification, the Federal Government reserves the right to impose the penalties of the Program Fraud Civil Remedies Act of 1986 on the Contractor to the extent the Federal Government deems appropriate.

(2) Contractor also acknowledges that if it makes, or causes to be made, a false, fictitious, or fraudulent claim, statement, submission, or certification to the Federal Government under a contract connected with a project that is financed in whole or in part with Federal assistance originally awarded by FTA under the authority of 49 U.S.C. § 5307, the Government reserves the right to impose the penalties of 18 U.S.C. § 1001 and 49 U.S.C. § 5307(n)(1) on the Contractor, to the extent the Federal Government deems appropriate.

12. Suspension and Debarment. The Agreement is a covered transaction for purposes of 49 C.F.R. Part 29. As such, Contractor is required to verify that none of the Contractor, its principals, as defined at 49 C.F.R. § 29.995, or affiliates, as defined at 49 C.F.R. § 29.905, are excluded or disqualified as defined at 49 C.F.R. §§ 29.940 and 29.945. Contractor is required to comply with 49 C.F.R. § 29, Subpart C and must include the requirement to comply with 49

C.F.R. § 29, Subpart C in any lower tier covered transaction it enters into.

13. Contracts Involving Federal Privacy Act Requirements. The following requirements apply to Contractor and its employees that administer any system of records on behalf of the Federal Government under any contract:

(1) Contractor agrees to comply with, and assures the compliance of its employees with, the information restrictions and other applicable requirements of the Privacy Act of 1974, 5 U.S.C. § 552a. Among other things, Contractor agrees to obtain the express consent of the Federal Government before Contractor or its employees operate a system of records on behalf of the Federal Government. Contractor understands that the requirements of the Privacy Act, including the civil and criminal penalties for violation of that Act, apply to those individuals involved, and that failure to comply with the terms of the Privacy Act may result in termination of the underlying contract.

(2) Contractor also agrees to include these requirements in each subcontract to administer any system of records on behalf of the Federal Government financed in whole or in part with Federal assistance provided by FTA.

14. Civil Rights. The following requirements apply to the underlying contract:

(1) Nondiscrimination - In accordance with Title VI of the Civil Rights Act, as amended, 42 U.S.C. § 2000d, section 303 of the Age Discrimination Act of 1975, as amended, 42 U.S.C. § 6102, section 202 of the Americans with Disabilities Act of 1990, 42 U.S.C. § 12132, and Federal transit law at 49 U.S.C. § 5332, Contractor agrees that it will not discriminate against any employee or applicant for employment because of race, color, creed, national origin, sex, age, or disability. In addition, Contractor agrees to comply with applicable Federal implementing regulations and other implementing requirements FTA may issue.

(2) Equal Employment Opportunity - The following equal employment opportunity requirements apply to the underlying contract:

(a) Race, Color, Creed, National Origin, Sex - In accordance with Title VII of the Civil Rights Act, as amended, 42 U.S.C. § 2000e, and Federal transit laws at 49 U.S.C. § 5332, the Contractor agrees to comply with all applicable equal employment opportunity requirements of U.S. Department of Labor (U.S. DOL) regulations, "Office of Federal Contract Compliance Programs, Equal Employment Opportunity, Department of Labor," 41 C.F.R. Part 60 et seq., (which implement Executive Order No. 11246, "Equal Employment Opportunity," as amended by Executive Order No. 11375, "Amending Executive Order 11246 Relating to Equal Employment Opportunity," 42 U.S.C. § 2000e note), and with any applicable Federal statutes, executive orders, regulations, and Federal policies that may in the future affect construction activities undertaken in the course of the Project. Contractor agrees to take affirmative action to ensure that applicants are employed, and that employees are treated during employment, without regard to their race, color, creed, national origin, sex, or age. Such action shall include, but not be limited to, the following: employment, upgrading, demotion or transfer, recruitment or recruitment advertising, layoff or termination; rates of pay or other forms of compensation; and

selection for training, including apprenticeship. In addition, Contractor agrees to comply with any implementing requirements FTA may issue.

(b) Age - In accordance with section 4 of the Age Discrimination in Employment Act of 1967, as amended, 29 U.S.C. § 623 and Federal transit law at 49 U.S.C. § 5332, Contractor agrees to refrain from discrimination against present and prospective employees for reason of age. In addition, Contractor agrees to comply with any implementing requirements FTA may issue.

(c) Disabilities - In accordance with section 102 of the Americans with Disabilities Act, as amended, 42 U.S.C. § 12112, Contractor agrees that it will comply with the requirements of U.S. Equal Employment Opportunity Commission, "Regulations to Implement the Equal Employment Provisions of the Americans with Disabilities Act," 29 C.F.R. Part 1630, pertaining to employment of persons with disabilities. In addition, Contractor agrees to comply with any implementing requirements FTA may issue.

(3) Contractor also agrees to include these requirements in each subcontract financed in whole or in part with Federal assistance provided by FTA, modified only if necessary to identify the affected parties.

15. Transit Employee Protective Provisions.

(1) Contractor agrees to comply with applicable transit employee protective requirements as follows:

(a) General Transit Employee Protective Requirements - To the extent that FTA determines that transit operations are involved, Contractor agrees to carry out the transit operations work on the underlying Agreement in compliance with terms and conditions determined by the U.S. Secretary of Labor to be fair and equitable to protect the interests of employees employed under this contract and to meet the employee protective requirements of 49 U.S.C.A. § 5333(b), and U.S. Department of Labor guidelines at 29 C.F.R. Part 215, and any amendments thereto. These terms and conditions are identified in the letter of certification from the U.S. DOL to FTA applicable to the FTA Recipient's project from which Federal assistance is provided to support work on the underlying contract. Contractor agrees to carry out that work in compliance with the conditions stated in that U.S. DOL letter. The requirements of this subsection (1), however, do not apply to any contract financed with Federal assistance provided by FTA either for projects for elderly individuals and individuals with disabilities authorized by 49 U.S.C. § 5310(a)(2), or for projects for nonurbanized areas authorized by 49 U.S.C. § 5311. Alternate provisions for those projects are set forth in subsections (b) and (c) of this clause.

(b) Transit Employee Protective Requirements for Projects Authorized by 49 U.S.C. § 5310(a)(2) for Elderly Individuals and Individuals with Disabilities - If the Agreement involves transit operations financed in whole or in part with Federal assistance authorized by 49 U.S.C. § 5310(a)(2), and if the U.S. Secretary of Transportation has determined or determines in the future that the employee protective requirements of 49 U.S.C. § 5333(b) are necessary or appropriate for the state and the public body subrecipient for which work is performed on the

underlying Agreement, Contractor agrees to carry out the Project in compliance with the terms and conditions determined by the U.S. Secretary of Labor to meet the requirements of 49 U.S.C. § 5333(b), U.S. Department of Labor ("DOL") guidelines at 29 C.F.R. Part 215, and any amendments thereto. These terms and conditions are identified in the U.S. DOL's letter of certification to FTA, the date of which is set forth Grant Agreement or Cooperative Agreement with the state. Contractor agrees to perform transit operations in connection with the underlying contract in compliance with the conditions stated in that U.S. DOL letter.

(c) Transit Employee Protective Requirements for Projects Authorized by 49 U.S.C. § 5311 in Nonurbanized Areas - If the contract involves transit operations financed in whole or in part with Federal assistance authorized by 49 U.S.C. § 5311, Contractor agrees to comply with the terms and conditions of the Special Warranty for the Nonurbanized Area Program agreed to by the U.S. Secretaries of Transportation and Labor, dated May 31, 1979, and the procedures implemented by U.S. DOL or any revision thereto.

(2) Contractor also agrees to include the any applicable requirements in each subcontract involving transit operations financed in whole or in part with Federal assistance provided by FTA.

16. Disadvantaged Business Enterprises.

(1) This Agreement is subject to the requirements of 49 C.F.R. Part 26, *Participation by Disadvantaged Business Enterprises in Department of Transportation Financial Assistance Programs.* The national goal for participation of Disadvantaged Business Enterprises (DBE) is 10%. The agency's overall goal for DBE participation is _1.3_ %. A separate contract goal has not been established for this procurement.

(2) Contractor shall not discriminate on the basis of race, color, national origin, or sex in the performance of the Agreement. Contractor shall carry out applicable requirements of 49 C.F.R. Part 26 in the award and administration of this DOT-assisted contract. Failure by the contractor to carry out these requirements is a material breach of this contract, which may result in the termination of this contract or such other remedy as City deems appropriate. Each subcontract Contractor signs with a subcontractor must include the assurance in this paragraph (*see* 49 C.F.R. § 26.13(b)).

(3) Contractor will be required to report its DBE participation obtained through race-neutral means throughout the period of performance.

(4) Contractor is required to pay its subcontractors performing work related to the Agreement for satisfactory performance of that work no later than 30 days after Contractor's receipt of payment for that work from the City.

(5) Contractor must promptly notify City, whenever a DBE subcontractor performing work related to the Agreement is terminated or fails to complete its work, and must make good faith efforts to engage another DBE subcontractor to perform at least the same amount of work. Contractor may not terminate any DBE subcontractor and perform that work through its own

forces or those of an affiliate without prior written consent of City.

17. Incorporation of FTA Terms. The preceding provisions include, in part, certain Standard Terms and Conditions required by the Department of Transportation ("DOT"), whether or not expressly set forth in the preceding contract provisions. All contractual provisions required by DOT, as set forth in FTA Circular 4220.1E, are hereby incorporated by reference. Anything to the contrary herein notwithstanding, all FTA mandated terms shall be deemed to control in the event of a conflict with other provisions contained in this Agreement. Contractor shall not perform any act, fail to perform any act, or refuse to comply with any City requests which would cause City to be in violation of the FTA terms and conditions.

18. Drug and Alcohol Testing. Contractor agrees to establish and implement a drug and alcohol testing program that complies with 49 C.F.R. Parts 653 and 654, produce any documentation necessary to establish its compliance with Parts 653 and 654, and permit any authorized representative of the United States Department of Transportation or its operating administrations, the State Oversight Agency of the State of Colorado, or the City, to inspect the facilities and records associated with the implementation of the drug and alcohol testing program as required under 49 C.F.R. Parts 653 and 654 and review the testing process. Contractor agrees further to certify annually its compliance with Parts 653 and 654 before January 30 of every year and to submit the Management Information System (MIS) reports before March 1 of every year to the Public Works Director for the City. To certify compliance Contractor shall use the "Substance Abuse Certifications" in the "Annual List of Certifications and Assurances for Federal Transit Administration Grants and Cooperative Agreements," which is published annually in the Federal Register.

Exhibit B

Tramway Operations Profile as of 10/1/14 (in effect since 12/29/10)

BLACK HAWK ONLY		Current: Eff. 12/29/10	
Hours of Service			
Monday to Thurs..	Hours of Operation	Service Hours	
Bus One	10 am to 2:30 am	16.5	
Bus Two	10 am to 9 pm	11.0	
		Total/Day	27.5
		Total/Week	110.0
		Annual	5,720
Friday to Sunday			
Bus One	10 am to 3:30 am	17.5	
Bus Two	Noon to 2 am	14.0	
		Total/Day	31.5
		Total/Week	94.5
		Annual	4,914.0
		Total/Week	204.5
	Black Hawk Tramway	**Total/Year**	**10,634.0**
Frequency of Service	(estimated)		Vehicles in Service
Monday to Thurs.			
Black Hawk Only	10 am to 9 pm	15 minutes	2
	9 pm to 2 am	20- 25 minutes	1
Friday to Sunday	Noon to 2 am	15 minutes	2
	10 am to Noon, 2 am to 3:30 am	20- 25 minutes	1

EXHIBIT C
CONTRACTOR COMPENSATION

Proposal dated September 24, 2014

Exhibit C

5910 N. Central Expwy., Suite 1145
Dallas, TX. 75206
720 • 335 • 3250
(fax) 972 • 391 • 4713
www.mvtransit.com

September 24, 2014

Mr. Thomas Isbester
Public Works Director – City of Black Hawk
987 Miners Mesa Rd.
Black Hawk, Colorado 80422

Dear Mr. Isbester,

First, let me apologize for the late delivery of this letter to you. MV Transportation Inc. (MV) truly values our relationship with the City of Black Hawk (City). Through our mutual discussions, MV and the City have discussed the possibility of a 5 year extension to our current operating agreement. We realize the benefits of extending our agreement without going out to bid and have worked hard to develop pricing that will be beneficial to both the City and MV.

MV Transportation Inc. would like to offer the City of Black Hawk the following extension pricing options for a five year contract to start on January first 2015 through December 31st 2019:

	Variable Rate	Fixed Rate	Central City
Jan 1st 2015 – Dec 31st 2015 –	$28.61	$6,487 / mo. (0.0)	$32.19
Jan 1st 2016 – Dec 31st 2016 –	$29.38	$6,662 / mo. (2.9)	$33.51
Jan 1st 2017 – Dec 31st 2017 –	$30.17	$6,842 / mo. (2.8)	$34.60
Jan 1st 2018 – Dec 31st 2018 –	$30.99	$7,027 / mo. (2.7)	$35.52
Jan 1st 2019 – Dec 31st 2019 –	$31.83	$7,216 / mo. (2.9)	$36.94

The pricing presented in this proposal is based on current Federal and State laws and requirements regarding affordable health care and minimum wage. MV would request we add language that allows for a negotiation to our rates should Federal or State laws change.

The annual fixed and variable pricing for 2015 will remain flat or equal to the pricing for the current calendar year. In addition, we have included pricing for the possible added service for Central City. The Central City price is based on an additional 2,000 hours for the new service. Finally, the Central City price is inclusive of both fixed and variable expenses required to operate the Central City service. As Central City service hours are added or deleted, the variable rate for that service will remain the same.

MV Transportation Inc. values our relationship with the City of Black Hawk. Bill and I look forward to continuing our long term relationship with you and the City. Please let Bill or I know if there are any questions we can answer regarding our proposal and as always, thank you for the opportunity to provide the transportation services for the Black Hawk and Central City program.

If there are any further questions I can answer, please feel free to contact me at 720-335-3250.

Thank you,
MV Transportation Inc.

Doug

Doug Gies
President – SW Group

Cc: Bill Hipp – MV

CERTIFICATE OF LIABILITY INSURANCE

DATE (MM/DD/YYYY): 11/24/2014

THIS CERTIFICATE IS ISSUED AS A MATTER OF INFORMATION ONLY AND CONFERS NO RIGHTS UPON THE CERTIFICATE HOLDER. THIS CERTIFICATE DOES NOT AFFIRMATIVELY OR NEGATIVELY AMEND, EXTEND OR ALTER THE COVERAGE AFFORDED BY THE POLICIES BELOW. THIS CERTIFICATE OF INSURANCE DOES NOT CONSTITUTE A CONTRACT BETWEEN THE ISSUING INSURER(S), AUTHORIZED REPRESENTATIVE OR PRODUCER, AND THE CERTIFICATE HOLDER.

IMPORTANT: If the certificate holder is an ADDITIONAL INSURED, the policy(ies) must be endorsed. If SUBROGATION IS WAIVED, subject to the terms and conditions of the policy, certain policies may require an endorsement. A statement on this certificate does not confer rights to the certificate holder in lieu of such endorsement(s).

PRODUCER
McGriff, Seibels & Williams of Oregon
1800 SW First Avenue, Suite 400
Portland, OR 97201

CONTACT NAME:
PHONE (A/C, No, Ext): 503-943-6621 FAX (A/C, No): 503-943-6622
E-MAIL ADDRESS:

INSURER(S) AFFORDING COVERAGE	NAIC #
INSURER A : ACE American Insurance Company	22667
INSURER B : Indemnity Insurance Company of North America	43575
INSURER C :	
INSURER D :	
INSURER E :	
INSURER F :	

INSURED
MV Transportation, Inc. and subsidiaries
2024 College Street
Elk Horn, IA 51531

COVERAGES **CERTIFICATE NUMBER:** ELXFK2AE **REVISION NUMBER:**

THIS IS TO CERTIFY THAT THE POLICIES OF INSURANCE LISTED BELOW HAVE BEEN ISSUED TO THE INSURED NAMED ABOVE FOR THE POLICY PERIOD INDICATED. NOTWITHSTANDING ANY REQUIREMENT, TERM OR CONDITION OF ANY CONTRACT OR OTHER DOCUMENT WITH RESPECT TO WHICH THIS CERTIFICATE MAY BE ISSUED OR MAY PERTAIN, THE INSURANCE AFFORDED BY THE POLICIES DESCRIBED HEREIN IS SUBJECT TO ALL THE TERMS, EXCLUSIONS AND CONDITIONS OF SUCH POLICIES. LIMITS SHOWN MAY HAVE BEEN REDUCED BY PAID CLAIMS.

INSR LTR	TYPE OF INSURANCE	ADDL INSR	SUBR WVD	POLICY NUMBER	POLICY EFF (MM/DD/YYYY)	POLICY EXP (MM/DD/YYYY)	LIMITS	
A	**GENERAL LIABILITY**			HDO G27330423	02/01/2014	02/01/2015	EACH OCCURRENCE	$ 5,000,000
	X COMMERCIAL GENERAL LIABILITY						DAMAGE TO RENTED PREMISES (Ea occurrence)	$ 100,000
	CLAIMS-MADE X OCCUR						MED EXP (Any one person)	$
							PERSONAL & ADV INJURY	$ 5,000,000
							GENERAL AGGREGATE	$ 5,000,000
	GEN'L AGGREGATE LIMIT APPLIES PER:						PRODUCTS - COMP/OP AGG	$ 5,000,000
	X POLICY PRO-JECT LOC							$
A	**AUTOMOBILE LIABILITY**			ISA H08818794	02/01/2014	02/01/2015	COMBINED SINGLE LIMIT (Ea accident)	$ 5,000,000
	X ANY AUTO						BODILY INJURY (Per person)	$
	ALL OWNED AUTOS / SCHEDULED AUTOS						BODILY INJURY (Per accident)	$
	HIRED AUTOS / NON-OWNED AUTOS						PROPERTY DAMAGE (Per accident)	$
								$
	UMBRELLA LIAB OCCUR						EACH OCCURRENCE	$
	EXCESS LIAB CLAIMS-MADE						AGGREGATE	$
	DED RETENTION $							$
A	**WORKERS COMPENSATION AND EMPLOYERS' LIABILITY**			WLR C47878226 (AOS)	02/01/2014	02/01/2015	X WC STATU-TORY LIMITS / OTH-ER	
B	ANY PROPRIETOR/PARTNER/EXECUTIVE OFFICER/MEMBER EXCLUDED? Y / N (Mandatory in NH)	N / A		WLR C47878238 (AZ, CA, MA) WCU C47878251 (OH & WA) SCF C4787824A (WI)			E.L. EACH ACCIDENT	$ 1,000,000
	If yes, describe under DESCRIPTION OF OPERATIONS below						E.L. DISEASE - EA EMPLOYEE	$ 1,000,000
							E.L. DISEASE - POLICY LIMIT	$ 1,000,000
								$
								$
								$
								$
								$

DESCRIPTION OF OPERATIONS / LOCATIONS / VEHICLES (Attach ACORD 101, Additional Remarks Schedule, if more space is required)
The City of Black Hawk, CO is named as an Additional Insured as respects the operations of the Named Insured with respects to General and Auto Liability coverage as required by written and signed contract subject to policy terms, conditions, limits and exclusions.

CERTIFICATE HOLDER

City of Black Hawk
Attn: Public Works Director
PO Box 68
987 Miners Mesa Road
Black Hawk, CO 80422

CANCELLATION

SHOULD ANY OF THE ABOVE DESCRIBED POLICIES BE CANCELLED BEFORE THE EXPIRATION DATE THEREOF, NOTICE WILL BE DELIVERED IN ACCORDANCE WITH THE POLICY PROVISIONS.

AUTHORIZED REPRESENTATIVE

© 1988-2010 ACORD CORPORATION. All rights reserved.

The ACORD name and logo are registered marks of ACORD

AGENCY CUSTOMER ID: _____

LOC #: _____

ADDITIONAL REMARKS SCHEDULE

PRODUCER McGriff, Seibels & Williams of Oregon	INSURED MV Transportation, Inc. and subsidiaries
POLICY NUMBER	
CARRIER / NAIC CODE	ISSUE DATE: 11/24/2014

ADDITIONAL REMARKS

THIS ADDITIONAL REMARKS FORM IS A SCHEDULE TO ACORD FORM,

FORM NUMBER: _____ FORM TITLE: _____

Auto Physical Damage

Insurance Company: Ace American Insurance Company
Policy #: ISA H08818794
Policy Period: 2/1/14 - 2/1/15
Limit: $1,000,000

© 2008 ACORD CORPORATION. All rights reserved.
The ACORD name and logo are registered marks of ACORD

CERTIFICATE NUMBER: ELXFK2AE

RESOLUTION 90-2014

A RESOLUTION ADOPTING AND ENTERING INTO THE TRUST AGREEMENT FOR THE COLORADO FIREFIGHTER HEALTH AND CIRCULATORY BENEFITS TRUST AND TAKING OTHER ACTIONS IN CONNECTION THEREWITH (continued from November 12, 2014, recommend tabling indefinitely)

RESOLUTION 102-2014

A RESOLUTION APPROVING THE COMMERCIAL LEASE FOR THE PROPERTY LOCATED AT 211 AND 221 GREGORY STREET BETWEEN 5B1S, LLC AND THE BLACK HAWK URBAN RENEWAL AUTHORITY

STATE OF COLORADO
COUNTY OF GILPIN
BLACK HAWK URBAN RENEWAL AUTHORITY

Resolution No. 102-2014

TITLE: A RESOLUTION APPROVING THE COMMERCIAL LEASE FOR THE PROPERTY LOCATED AT 211 AND 221 GREGORY STREET BETWEEN 5B1S, LLC AND THE BLACK HAWK URBAN RENEWAL AUTHORITY

NOW, THEREFORE, BE IT RESOLVED BY THE BOARD OF ALDERMEN OF THE CITY OF BLACK HAWK, COLORADO, THAT:

Section 1. The Commercial Lease for the property located at 211 and 221 Gregory Street between 5B1S, LLC and the Black Hawk Urban Renewal Authority, attached hereto as **Exhibit A**, is hereby approved, and the Chairman is authorized to execute the same on behalf of the Authority.

RESOLVED AND PASSED this 10th day of December, 2014.

_____
David D. Spellman, Chairman

ATTEST:

_____
Melissa Greiner, Authority Clerk