REGULAR MEETING AGENDA

City of Black Hawk City Council
211 Church Street, Black Hawk, CO

January 13, 2021
3:00 p.m.

The City of Black Hawk is hosting Virtual City Council meetings in Zoom in response to the Coronavirus COVID-19 until further notice. There are no physical meetings at this time.

Join from a PC, Mac, iPad, iPhone, or Android device:
Please click this URL to join: https://us02web.zoom.us/s/83762272999

Or join by phone:
877-853-5257 or 888-475-4499 (both Toll-Free)

Webinar ID: 837 6227 2999
International numbers available

Phone commands using your phone's dial pad while in a Zoom meeting:

*6 – Toggle mute/unmute
*9 – Raise your hand to make a public comment or to speak for or against a Public Hearing matter

Public Comment:
If you wish to make a public comment during the meeting, please go to:
https://www.cityofblackhawk.org/comment_signup
and provide your Name, Email address, and Telephone.
During the Public comment section of the meeting, the host will go to sign up to ask for comments from those who have signed up

1. CALL TO ORDER:
2. ROLL CALL & PLEDGE OF ALLEGIANCE:
3. AGENDA CHANGES:
4. CONFLICTS OF INTEREST: (Council disclosures are on file w/City Clerk & Sec. of State)
5. PUBLIC COMMENT: *Please limit comments to 5 minutes*
6. APPROVAL OF MINUTES: December 9, 2020
7. PUBLIC HEARINGS:

   A. CB1, A Bill for an Ordinance Amending Chapter 6 of the Black Hawk Municipal Code and Adding a New Article XXI Creating a Licensing System for Retail Marijuana Hospitality and Sale Establishments

   B. CB2, An Ordinance Amending Sections 7-154 and 10-203 of the Black Hawk Municipal Code Relating to Tobacco Age Limits

   C. CB3, An Ordinance Approving the Amended and Restated Option and Lease Agreement with Vertical Bridge Development, LLC for the Installation and Maintenance of a Cellular Tower Facility on City Property on Miners Mesa

   D. Resolution 1-2021, A Resolution Approving a Variance to Allow a Lot Size of 2.94 acres and a Lot Depth of Between 100 and 200 Feet for the Proposed Lot 1 of The Golden Gilpin Mill Site Minor Subdivision

E. Resolution 70-2020, A Resolution Conditionally Approving the Golden Gilpin Mill Site Minor Subdivision (continued from December 9, 2020)

F. Resolution 2-2021, A Resolution Approving a Certificate of Architectural Compatibility for the Grand Staircase Located at 251 Gregory Street

8. ACTION ITEMS:

A. Resolution 3-2021, A Resolution Establishing a Designated Public Place for the Posting of Meeting Notices Pusuant to C.R.S. § 24-6-402(2)(c)

B. Resolution 4-2021, A Resolution Approving Certain Service Agreements for Calendar Year 2021

C. Resolution 5-2021, A Resolution Approving Certain Service Agreements for Calendar Year 2021

D. Resolution 6-2021, A Resolution Approving the Reorganization of the Police Department Records Division and Approving the Associated Job Descriptions

E. Resolution 7-2021, A Resolution Ratifying the Approval of the Second Amendment to Subdivision Agreement Between the City of Black Hawk, Colorado and Monarch Growth, Inc.

F. Consideration of Approval to Waive Petitioning Requirements for Chicago Dogs Eatery, Inc.'s Change of Location

9. CITY MANAGER REPORTS:

10. CITY ATTORNEY REPORTS:

11. EXECUTIVE SESSION:

12. ADJOURNMENT:

City of Black Hawk
City Council

December 9, 2020

MEETING MINUTES

1. CALL TO ORDER: Mayor Spellman called the City Council's regular meeting to order on Wednesday, December 9, 2020, at 3:00 p.m.

2. ROLL CALL: Present were: Mayor Spellman, Aldermen Armbright, Bennett, Midcap, Moates, and Torres.

   Absent at the time of Roll Call: Alderman Johnson.

   Virtual/Present Staff: City Attorney Hoffmann, City Manager Cole, Police Chief Moriarty, Commanders Jantz and Cooper, Fire Chief Woolley, Finance Director Hillis, City Clerk/Administrative Services Director Greiner, Public Works Director Isbester, City Engineer Reed, Community Planning & Development Director Linker, IT Manager Muhammad, and Deputy City Clerk Martin.

   PLEDGE OF ALLEGIANCE: Mayor Spellman led the meeting in the recitation of the Pledge of Allegiance.

Mayor Spellman asked the employees that were on the call to please stay on until the end of the meeting.

3. AGENDA CHANGES: Deputy City Clerk Martin confirmed there were no changes to the agenda.

4. CONFLICTS OF INTEREST: City Attorney Hoffmann asked Council to declare any Conflicts of Interest on any issue appearing on the agenda this afternoon other than those previous disclosures and conflicts that have already been disclosed and are on file with the City Clerk and Secretary of State. City Council noted no conflicts.

   City Attorney Hoffmann asked the virtual audience if there were any objections to any member of Council voting on any issue on the agenda this afternoon. There were no objections noted.

5. PUBLIC COMMENT: City Clerk Greiner confirmed that no one had signed up for public comment.

6. APPROVAL OF MINUTES: November 11, 2020 Regular Meeting Minutes
December 1, 2020 Special Meeting Minutes

MOTION TO APPROVE Alderman Bennett **MOVED** and was **SECONDED** by Alderman Torres to approve the Minutes as presented.

MOTION PASSED There was no discussion, and the motion unanimously.

7. PUBLIC HEARINGS:

A. 2021 Budget Adoption

I. Resolution 69-2020, A Resolution Summarizing Expenditures and Revenues for Each Fund and Adopting a Budget for the City of Black Hawk, Colorado, for the Calendar Year Beginning on the First Day of January 2021 and Ending on the Last Day of December 2021, and Appropriating Sums of Money to Various Funds and Spending Agencies in the Amount, and for the Purposes Set Forth Within the Attached 2021 Budget

II. CB31, An Ordinance Levying General Property Taxes for the Year 2020 to Help Defray the Costs of Government for the City of Black Hawk, Colorado for the 2021 Budget Year

Mayor Spellman read the titles and opened the public hearings.

Finance Director Hillis said this version of the Budget included two small changes made at the Budget Work Session. Alderman Bennett thanked Hillis for a nice job.

PUBLIC HEARING: Mayor Spellman declared a Public Hearing on Resolution 69-2020, a Resolution summarizing expenditures and revenues for each fund and adopting a Budget for the City of Black Hawk, Colorado, for the calendar year beginning on the first day of January 2021 and ending on the last day of December 2021, and appropriating sums of money to various funds and spending agencies in the amount, and for the purposes set forth within the attached 2021 Budget open and invited anyone wanting to address the Board either "for" or "against" the proposed resolution to come forward.

No one wished to speak, and Mayor Spellman declared the Public Hearing closed.

MOTION TO APPROVE

Alderman Bennett **MOVED** and was **SECONDED** by Alderman Armbright to approve Resolution 69-2020, A Resolution Summarizing Expenditures and Revenues for Each Fund and Adopting a Budget for the City of Black Hawk, Colorado, for the Calendar Year Beginning on the First Day of January 2021 and Ending on the Last Day of December 2021, and Appropriating Sums of Money to Various Funds and Spending Agencies in the Amount, and for the Purposes Set Forth Within the Attached 2021 Budget.

MOTION PASSED

There was no discussion, and the motion **PASSED** unanimously.

Finance Director Hillis then explained that the Mill Levy increased a little in assessed value at .036 mills and $11,400 in property taxes.

PUBLIC HEARING:

Mayor Spellman declared a Public Hearing on CB31, an Ordinance levying general Property Taxes for the year 2020 to help defray the costs of Government for the City of Black Hawk, Colorado for the 2021 Budget year open and invited anyone wanting to address the Board either "for" or "against" the proposed ordinance to come forward.

No one wished to speak, and Mayor Spellman declared the Public Hearing closed.

MOTION TO APPROVE

Alderman Bennett **MOVED** and was **SECONDED** by Alderman Torres to approve CB31, an Ordinance levying general Property Taxes for the year 2020 to help defray the costs of Government for the City of Black Hawk, Colorado for the 2021 Budget year.

MOTION PASSED

There was no discussion, and the motion **PASSED** unanimously

B. CB32, An Ordinance Approving the Amendment to the Intergovernmental Grant Agreement Between the State of Colorado Department of Transportation, Division of Transit and Rail and the City of Black Hawk dba Black Hawk and Central City Tramway

Mayor Spellman read the title and opened the public hearing.

Public Works Director Isbester introduced this item for the shuttle, which adds the Phase II Grant Award of an extra $81,000 and extends the time to utilize the funds until December 31, 2021.

PUBLIC HEARING:

Mayor Spellman declared a Public Hearing on CB32, an Ordinance approving the amendment to the Intergovernmental Grant Agreement between the State of Colorado Department of Transportation, Division of Transit and Rail and the City of Black Hawk dba Black Hawk and Central

City Tramway open and invited anyone wanting to address the Board either "for" or "against" the proposed ordinance to come forward.

No one wished to speak, and Mayor Spellman declared the Public Hearing closed.

MOTION TO APPROVE Alderman Armbright **MOVED** and was **SECONDED** by Alderman Midcap to approve CB32, an Ordinance approving the amendment to the Intergovernmental Grant Agreement between the State of Colorado Department of Transportation, Division of Transit and Rail and the City of Black Hawk dba Black Hawk and Central City Tramway.

MOTION PASSED There was no discussion, and the motion **PASSED** unanimously

C. CB33, An Ordinance Approving the Intergovernmental Agreement Between the City of Black Hawk and the Gilpin Ambulance Authority Regarding Maintenance of the Authority's Ambulances

Mayor Spellman read the title and opened the public hearing.

Public Works Director Isbester explained this was our annual agreement for fleet maintenance with the Authority. He said our 2021 rate is now $110/hour and was approved at this morning's Authority meeting.

PUBLIC HEARING: Mayor Spellman declared a Public Hearing on CB33, an Ordinance approving the Intergovernmental Agreement between the City of Black Hawk and the Gilpin Ambulance Authority regarding maintenance of the Authority's Ambulances open and invited anyone wanting to address the Board either "for" or "against" the proposed ordinance to come forward.

No one wished to speak, and Mayor Spellman declared the Public Hearing closed.

MOTION TO APPROVE Alderman Bennett **MOVED** and was **SECONDED** by Alderman Torres to approve CB33, an Ordinance approving the Intergovernmental Agreement between the City of Black Hawk and the Gilpin Ambulance Authority regarding maintenance of the Authority's Ambulances.

MOTION PASSED There was no discussion, and the motion **PASSED** unanimously

D. CB34, An Ordinance Approving the City's Participation in the Intergovernmental Agreement in the Colorado Information Sharing Consortium

Mayor Spellman read the title and opened the public hearing.

Commander Jantz introduced this item, allowing the Police Department to participate in a metro wide agency database to share information to help with investigations.

PUBLIC HEARING: Mayor Spellman declared a Public Hearing on CB34, an Ordinance approving the City's participation in the Intergovernmental Agreement in the Colorado Information Sharing Consortium open and invited anyone wanting to address the Board either "for" or "against" the proposed ordinance to come forward.

No one wished to speak, and Mayor Spellman declared the Public Hearing closed.

MOTION TO APPROVE Alderman Armbright **MOVED** and was **SECONDED** by Alderman Bennett to approve 34, an Ordinance approving the City's participation in the Intergovernmental Agreement in the Colorado Information Sharing Consortium.

MOTION PASSED There was no discussion, and the motion **PASSED** unanimously

E. Resolution 70-2020, A Resolution Approving a Minor Subdivision to Combine Two Lots on Property Located at 7593 State Highway 119

Mayor Spellman read the title and continued the public hearing to the January 13, 2021, City Council meeting.

MOTION TO CONTINUE Alderman Bennett **MOVED** and was **SECONDED** by Alderman Armbright to continue Resolution 70-2020, a Resolution approving a Minor Subdivision to combine two lots on property located at 7593 State Highway 119, to the January 13, 2020 meeting.

MOTION PASSED There was no discussion, and the motion **PASSED** unanimously

8. ACTION ITEMS:

A. Resolution 71-2020, A Resolution Approving Change Order #2 in the Total Amount of $64,858.84 for the Purpose of Restoring Stained Glass Windows in the Historic Methodist Church Building Located at 331 Gregory Street

Mayor Spellman read the title.

City Engineer Reed introduced this item. He started by saying that some exterior improvements are already included with the original bid. Yet, it has been discovered that there are several of the stained glass windows

that are cracked, mismatched, missing lead, and bowed in. If approved, he said, Watkins Stained Glass would complete the repairs. He added that Phil Watkins personally visited the site and will personally rehabilitate these windows; he has over 50 years of experience. His family dates back to the 1760s in this industry. He said they are the most knowledgeable and experienced stained glass studio around.

Alderman Midcap asked why the windows were not considered before, and Mayor Spellman replied that they did not anticipate going to this extent of restoration. From the exterior, they looked fine. He said once they went inside to talk about storm windows is when it was discovered that they needed to be restored. He added that it is probably better that it happened this way because the City's Historic Preservation Consultant recommended Watkins, who are highly sought after; he doesn't believe Roche Constructors would have thought to use Watkins.

MOTION TO APPROVE

Alderman Moates **MOVED** and was **SECONDED** by Alderman Torres to approve Resolution 71-2020, a resolution approving Change Order #2 in the total amount of $64,858.84 for the purpose of restoring stained glass windows in the Historic Methodist Church Building located at 331 Gregory Street.

MOTION PASSED

There was no discussion, and the motion **PASSED** unanimously.

Alderman Johnson joined the meeting.

B. Resolution 72-2020, A Resolution Authorizing the Disposal of Surplus City Property

Mayor Spellman read the title.

City Manager Cole explained that Resolution 24-2018 authorized the City Manager to dispose of surplus or unused equipment but did not specifically call out vehicles. He added that the City is trying to move everything through auction houses for best market value and tracking purposes as a matter of process. He said if they came across anything unusual to donate or sell, he would bring that back to Council for approval.

MOTION TO APPROVE

Alderman Armbright **MOVED** and was **SECONDED** by Alderman Johnson to approve Resolution 72-2020, a resolution authorizing the disposal of surplus City property.

MOTION PASSED

There was no discussion, and the motion **PASSED** unanimously.

C. Resolution 73-2020, A Resolution Approving the Fifth Addendum to the Agreement for Transit Related Services for the Black Hawk & Central City Tramway for 2021 Between MV Transportation, Inc. and the City of Black Hawk

Mayor Spellman read the title.

Public Works Director Isbester stated that MV Transportation is still willing to provide driver service with a slight increase. He's hoping to have the shuttle start running as of January 1, depending on COVID-19.

MOTION TO APPROVE

Alderman Midcap **MOVED** and was **SECONDED** by Alderman Torres to approve Resolution 73-2020, a resolution approving the Fifth Addendum to the Agreement for transit-related services for the Black Hawk & Central City Tramway for 2021 between MV Transportation, Inc. and the City of Black Hawk.

MOTION PASSED

There was no discussion, and the motion **PASSED** unanimously.

D. Resolution 74-2020, A Resolution Approving the Ninth Addendum to Personal Services Agreement with 5280 Strategies, LLC

Mayor Spellman read the title.

City Clerk/Administrative Services Director Greiner introduced the addendum's annual renewal for the City's lobbyists, with no changes to costs.

MOTION TO APPROVE

Alderman Bennett **MOVED** and was **SECONDED** by Alderman Armbright to approve Resolution 74-2020, a resolution approving the Ninth Addendum to Personal Services Agreement with 5280 Strategies, LLC.

MOTION PASSED

There was no discussion, and the motion **PASSED** unanimously.

E. Resolution 75-2020, A Resolution Approving the Third Addendum to Personal Services Agreement with M & C Communications, LLC

Mayor Spellman read the title.

City Clerk/Administrative Services Director Greiner reported that the City has dramatically decreased its services with M&C due to budgetary constraints. She said M&C would only develop and manage the City's social media monthly, and anything else would be on a case-by-case basis.

DRAFT

MOTION TO APPROVE Alderman Torres **MOVED** and was **SECONDED** by Alderman Armbright to approve Resolution 75-2020, a resolution approving the Third Addendum to Personal Services Agreement with M & C Communications, LLC.

MOTION PASSED There was no discussion, and the motion **PASSED** unanimously.

F. Resolution 76-2020, A Resolution Approving the 2021 Contract with Pinnacol Assurance for Workers' Compensation Insurance

Mayor Spellman read the title.

City Clerk/Administrative Services Director Greiner introduced this item by saying this annual renewal will mark the completion of 10 years with Pinnacol. She said even though there was a slight increase in the City's Experience Mod, which limited savings for 2021, the reduction in payroll for 2021 and our history of 10 years with them has ultimately provided a 16% lower premium than 2020. She said that shows that they value our relationship.

MOTION TO APPROVE Alderman Torres **MOVED** and was **SECONDED** by Alderman Armbright to approve Resolution 76-2020, a resolution approving the 2021 Contract with Pinnacol Assurance for Workers' Compensation Insurance.

MOTION PASSED There was no discussion, and the motion **PASSED** unanimously.

G. Resolution 77-2020, A Resolution Adopting the 2021 City Council Regular Meeting Schedule

H. Resolution 78-2020, A Resolution Adopting the 2021 Holiday Schedule

I. Resolution 79-2020, A Resolution Adopting the 2021 Historic Preservation Commission Regular Meeting Schedule

Mayor Spellman read the titles.

City Clerk/Administrative Services Director Greiner introduced these last three housekeeping items regarding the meeting and holiday schedules for 2021.

MOTION TO APPROVE Alderman Armbright **MOVED** and was **SECONDED** by Alderman Bennett to approve Resolution 77-2020, a resolution adopting the 2021 City Council regular meeting schedule, Resolution 78-2020, a resolution

adopting the 2021 holiday schedule, and Resolution 79-2020, a resolution adopting the 2021 Historic Preservation Commission regular meeting schedule.

MOTION PASSED There was no discussion, and the motion **PASSED** unanimously.

9. CITY MANAGER REPORTS: City Manager Cole had nothing to report.

10. CITY ATTORNEY: City Attorney Hoffmann had nothing to report.

11. EXECUTIVE SESSION: City Attorney Hoffmann recommended item number 2 only for Executive Session and the specific legal issues related to City device fees, land use issues, and potential legislation.

Mayor Spellman wanted to close the last meeting of the year by noting how challenging of a year it was for everyone. He said it was sad not to see everyone in person at the meetings, and he missed ringing the bell and the cookies! He's hoping by the second quarter of 2021 we could be back to normal or as close to normal as possible. He said he misses seeing each other, which keeps up the enthusiasm for what's going on in the City. He ended by saying staff and team members have worked through this very well, and he wishes everyone a Merry Christmas and Happy Holidays.

Alderman Torres added that most places have cut back on projects, but Black Hawk did not, which is a real testament to making good decisions. He said Council may not always agree, but there is a lot of respect and unity, and they always arrive at the right decision, and he would like to congratulate everyone on Council.

Alderman Armbright said she was very happy they did not have to lay off anyone; Black Hawk was able to keep all employees.

MOTION TO ADJOURN INTO EXECUTIVE SESSION Alderman Bennett **MOVED** and was **SECONDED** by Alderman Johnson to adjourn into Executive Session at 3:30 p.m. to hold a conference with the City's attorney to receive legal advice on specific legal questions, pursuant to C.R.S. § 24-6-402(4)(b).

MOTION PASSED There was no discussion, and the motion **PASSED** unanimously.

MOTION TO ADJOURN Alderman Bennett **MOVED** and was **SECONDED** by Alderman Johnson to adjourn the Executive Session at 3:50 p.m.

MOTION PASSED There was no discussion, and the motion **PASSED** unanimously.

12. ADJOURNMENT: Mayor Spellman declared the Regular Meeting of the City Council closed at 3:50 p.m.

Melissa A. Greiner, CMC
City Clerk

David D. Spellman
Mayor

DRAFT

COUNCIL BILL 1
ORDINANCE 2021-1
A BILL FOR AN ORDINANCE AMENDING CHAPTER 6 OF THE BLACK HAWK MUNICIPAL CODE AND ADDING A NEW ARTICLE XXI CREATING A LICENSING SYSTEM FOR RETAIL MARIJUANA HOSPITALITY AND SALE ESTABLISHMENTS

STATE OF COLORADO
COUNTY OF GILPIN
CITY OF BLACK HAWK

COUNCIL BILL NUMBER: CB1

ORDINANCE NUMBER: 2021-1

TITLE: A BILL FOR AN ORDINANCE AMENDING CHAPTER 6 OF THE BLACK HAWK MUNICIPAL CODE AND ADDING A NEW ARTICLE XXI CREATING A LICENSING SYSTEM FOR RETAIL MARIJUANA HOSPITALITY AND SALE ESTABLISHMENTS

BE IT ORDAINED BY THE CITY COUNCIL OF THE CITY OF BLACK HAWK, GILPIN COUNTY:

Section 1. Section 6-602 of the Black Hawk Municipal Code is hereby amended with the addition of the following definition to appear in alphabetical order:

Sec. 6-602. Definitions

Retail Marijuana Hospitality and Sales Establishment means a facility, which cannot be mobile, licensed to permit the consumption of only the retail marijuana or retail marijuana products it has sold pursuant to the license issued by the City of Black Hawk pursuant to this Article.

Section 2. Section 6-605 of the Black Hawk Municipal Code is hereby amended as follows:

Sec. 6-605. Location criteria; limitation on number of marijuana hospitality establishments.

* * *

(d) In addition to the location limitations set forth herein, no new marijuana hospitality establishment application shall be accepted for filing in the event one (1) marijuana hospitality establishment **or one (1) retail marijuana hospitality and sales establishment** is already licensed as of the date of the proposed new application.

Section 3. Chapter 6 of the Black Hawk Municipal Code is hereby amended with the addition of a new Article XXI entitled, "Retail Marijuana Hospitality and Sales Establishment" to read as follows:

ARTICLE XXI
RETAIL MARIJUANA HOSPITALITY AND SALES ESTABLISHMENT

Sec. 6-801. Findings of Fact.

The City Council recognizes that open or public consumption of marijuana is illegal in the state despite legalization of the substance under the Colorado Constitution and state law, and finds there is an unmet need within the City for private, safe and regulated places where adults can legally use and consume marijuana in a social setting. The City Council finds such private social use or consumption of marijuana should be regulated locally, consistent with the state regulatory process set forth in House Bill 19-1230, to minimize the potential adverse impacts on its citizens potentially caused by violations, underage consumption and civil disturbances, as well as to maintain peace and tranquility within the City.

Sec. 6-802. Definitions.

The following words, when used in this Article shall have the following meanings:

Alcoholic Beverage means fermented malt beverage or malt, vinous or spirituous liquors; except that alcoholic beverage shall not include confectionery containing alcohol within the limits prescribed by C.R.S. § 25-5-410(1)(i)(II).

Good Cause means (i) the licensee or applicant violated, has not met, or has failed to comply with any terms or conditions of state or local law or regulations; (ii) the licensee or applicant failed to comply with special terms or conditions that were placed on its license pursuant to an order of state or local licensing authorities; or (iii) the licensed premises operated in a manner that adversely affects the public health or the safety of the immediate neighborhood in which the establishment is located.

License means a retail marijuana hospitality and sales establishment license issued pursuant to this Article.

Local Licensing Authority means the Board of Aldermen for the City of Black Hawk.

Marijuana has the same meaning as defined in Section 6-555 of this Code.

Marijuana Hospitality Establishment means a facility licensed to permit the consumption, but not the sale of, medical or retail marijuana, medical or retail marijuana concentrate, and medical or retail marijuana-infused products pursuant to Article XIX of this Chapter.

Marijuana Products means concentrated marijuana products and marijuana products that are comprised of marijuana and other ingredients that are intended for

use or consumption, such as but not limited to, edible products, ointments and tinctures.

Open and public or ***openly and publicly*** means a place not protected from unaided observation lawfully made from outside its perimeter not involving physical intrusion and to which the public or a substantial number of the public has access without restriction including, without limitation, highways, transportation facilities, places of amusement, parks, playgrounds, and the common areas of public buildings and facilities that are generally open or accessible to members of the public without restriction.

Premises means the distinct and defined private location of a marijuana hospitality establishment, which may include a building, a part of a building, a room, or any other definite contiguous area adequately separated by physical barriers and ventilation to prevent observation of the premises by site, sound or smell from outside of the premises.

Retail Marijuana Hospitality and Sales Establishment means a facility, which cannot be mobile, licensed to permit the consumption of only the retail marijuana or retail marijuana products it has sold pursuant to the license issued by the City of Black Hawk pursuant to this Article.

Smoking means inhaling, exhaling, burning, or carrying any lighted or heated cigar, cigarette, pipe, or any other lighted or heated marijuana or marijuana concentrate intended for inhalation.

Vaping means the activation of an electronic smoking device, or the possession of any activated electronic smoking device, containing marijuana or marijuana concentrate.

Sec. 6-803. License Required.

It shall be unlawful for any person or entity to operate a retail marijuana hospitality establishment within the City without first obtaining a license from the City. Such license must be kept current at all times and failure to maintain a current license constitutes a violation of this Section.

Sec. 6-804. Requirements of Application for License; Payment of Application Fee; Denial of License.

(a) A person seeking a license or renewal of a license issued pursuant to this Article shall submit an application to the local licensing authority on forms provided by the City Clerk. At the time of application, each applicant shall pay a nonrefundable fee to the City in the amount to be determined by the City by separate resolution to defray the cost incurred by the City for costs including but not limited to inspection, administration, and enforcement of retail marijuana hospitality and sales establishments. In addition, the applicant shall present one (1) of the following forms of identification:

(1) An operator's, chauffer's or similar type of driver's license issued by any state within the United States or a U.S. territory;

(2) An identification card, issued by any state for purpose of proving age using requirements similar to those in C.R.S. §§ 42-2-302 and 42-2-303;

(3) A United States military identification card;

(4) A valid passport; or

(5) An enrollment card issued by the government authority of a federally recognized tribe located in the State of Colorado.

(b) The applicant shall also provide the following information for the applicant, and all persons having a ten percent (10%) or more financial interest in the retail marijuana hospitality and sales establishment that is the subject of the application or, if the applicant is an entity, having a ten percent (10%) or more financial interest in the entity:

(1) Name, address, date of birth;

(2) A complete set of fingerprints;

(3) Suitable evidence of proof of lawful presence, residence, if applicable, and good character and reputation that the City may request;

(4) An acknowledgment and consent that the City will conduct a background investigation, including a criminal history check, and that the City will be entitled to full and complete disclosure of all financial records of the retail marijuana hospitality and sales establishment, including records of deposit, withdrawals, balances and loans;

(5) If the applicant is a business entity, information regarding the entity, including, without limitation, the name and address of the entity, its legal status, and proof of registration with, or a certificate of good standing from, the Colorado Secretary of State, as applicable;

(6) The name and complete address of the proposed retail marijuana hospitality and sales establishment, including the facilities to be used in furtherance of such business, whether or not such facilities are, or are planned to be, within the territorial limits of the City;

(7) If the applicant is not the owner of the proposed licensed premises, a notarized statement from the owner of such property authorizing the use of the property for a retail marijuana hospitality and sales establishment;

(8) A copy of any deed, lease, contract or other document reflecting the right of the applicant to possess the proposed licensed premises along with the conditions of occupancy of the premises;

(9) Evidence of a valid sales tax license for the business;

(10) If the retail marijuana hospitality and sales establishment will be providing retail marijuana products in edible form, evidence of at a minimum a pending application for any food establishment license or permit that may be required by the State;

(11) A "to scale" diagram of the premises, showing, without limitation, a site plan, building layout, all entry ways and exits to the retail marijuana hospitality and sales establishment, loading zones and all areas in which retail marijuana will be stored or dispensed;

(12) A comprehensive business operation plan for the retail marijuana hospitality and sales establishment which shall contain, without limitation, the following:

a. A copy of the Articles of Incorporation or Partnership/Operating Agreement for the licensee's business entity;

b. A security plan meeting the requirements of Section 6-574 of this Chapter;

c. A description by category of all products to be sold;

d. A signage plan that is in compliance with all applicable requirements of this Article and other applicable provisions of the Black Hawk Municipal Code, as well as the Colorado Retail Marijuana Code and all rules and regulations promulgated thereunder; and

e. A plan for the disposal of marijuana and related byproducts.

f. A site plan defining the proposed licensed premises, showing where patrons will be permitted to gather, identifying indoor and outdoor seating or gathering areas, showing parking locations for patrons, and identifying all intended uses of the establishment premises. The application shall demonstrate how the premises will be adequately separated by physical barriers and ventilation to prevent observation by site, sound or smell of the premises from outside of the premises. The application shall further describe the methods that will be used to confirm a patron's age and to restrict all underage access to the establishment.

(13) Any additional information that the local licensing authority determines to be necessary in connection with the investigation and review of the application.

(a) The applicant shall verify the truthfulness of the information required by this Section by the applicant's signature on the application.

(b) A license issued pursuant to this Article does not eliminate the need for the licensee to obtain other required permits or licenses related to the operation of the retail marijuana hospitality and sales establishment, including, without limitation, a license from the State licensing authority and any development approvals or building permits required by this Article and any other applicable provisions of the Black Hawk Municipal Code.

(c) Upon receipt of a completed application, the local licensing authority shall circulate the application to all affected departments of the City to determine whether the application is in full compliance with all applicable laws, rules and regulations.

(d) Upon receipt of an application for a new license, the local licensing authority shall schedule a public hearing on the application to be held not less than thirty (30) days after the date of the completed application. The local licensing authority shall cause a notice of such hearing to be posted in a conspicuous place upon the proposed licensed premises and published in a newspaper of general circulation within the City not less than ten (10) days prior to the hearing. Such posted notice given by posting shall include a sign of suitable material, not less than twenty-two (22) inches wide and twenty-six (26) inches high, composed of letters of not less than one (1) inch in height. Both the posted and the published notice shall state the type of license applied for, the date of the hearing, the name and address of the applicant, and such other information as may be required to fully apprise the public of the nature of the application.

(e) Not less than five (5) days prior to the date of the public hearing for a new license, the local licensing authority shall cause its preliminary findings based on its investigation to be known in writing to the applicant and other parties in interest. The local licensing authority shall deny any application that does not meet the requirements of this Article. The local licensing authority shall also deny any application that contains any false, misleading or incomplete information. The local licensing authority shall also deny or refuse to issue a license for good cause. Denial of an application for a license shall not be subject to further administrative review but only to review by a court of competent jurisdiction.

(f) The City shall, prior to issuance of the license, perform an inspection of the proposed licensed premises to determine compliance with any applicable requirements of this Article or other applicable requirements of the Black Hawk Municipal Code.

Sec. 6-805. Location Criteria.

Prior to the issuance of a license, the Local Licensing Authority shall determine whether the proposed location of the retail marijuana hospitality and sales establishment complies with the requirements of this Section.

(a) No retail marijuana hospitality and sales establishment shall be located except within that one-block portion of the History Appreciation Recreation Destination ("HARD") District identified by the street addresses of 211 Gregory Street, 221 Gregory Street, 231 Gregory Street, and 241 Gregory Street.

(b) No retail marijuana hospitality and sales establishment may operate from a moveable, mobile, or transitory location. The retail marijuana hospitality and sales establishment must be in a permanent location.

(c) The suitability of a location for a retail marijuana hospitality and sales establishment is determined at the time of the issuance of the first license. The fact that changes in the neighborhood occur after the issuance of the first license might render the site unsuitable for retail marijuana hospitality and sales establishment under this Section is not grounds to suspend, revoke, or refuse to renew the license for such business so long as the license remains in effect.

Sec. 6-806. Number of Licenses Limitation.

No new retail marijuana hospitality and sales establishment application shall be accepted in the event that either one (1) retail marijuana hospitality and sales establishment or one (1) marijuana hospitality establishment is already licensed as of the date of the proposed new application.

Sec. 6-807. Persons Prohibited as Licensees and Employees.

(a) No license shall be issued to, held by, or renewed by any of the following:

(1) Any person until all applicable fees have been paid;

(2) Any person who is not of good moral character satisfactory to the local licensing authority;

(3) Any corporation, any of whose officers, directors or stockholders are not of good moral character satisfactory to the local licensing authority;

(4) Any partnership, association or company, any of whose officers are not of good moral character satisfactory to the local licensing authority;

(5) Any person employing, assisted by, or financed in whole or in part by any other person who is not of good character and reputation satisfactory to the local licensing authority;

(6) Any sheriff, deputy sheriff, police officer, prosecuting officer, and State or local licensing authority or any of its members, inspectors or employees;

(7) Any natural person under twenty-one (21) years of age;

(8) Any person for a licensed location that is also a retail food establishment or wholesale food registrant;

(9) Any person who has not been a resident of Colorado for at least two (2) years prior to the date of the application;

(10) Any person who has not possessed a medical marijuana license or provisional medical marijuana license authorizing the sale of marijuana at retail within the meaning of C.R.S. § 44-11-101, et seq., or in the alternative has not possessed a retail marijuana license within the meaning of C.R.S. § 44-12-101, et seq., in another jurisdiction for at least one (1) year prior to the date of the application, with the person having not received any State or local violations of their medical marijuana or retail marijuana license in said other jurisdiction; provided however, this provision shall not be applicable to employees who do not have an ownership interest in the license;

(11) Any person who has discharged a sentence for a felony conviction within the past five (5) years;

(12) Any person who, at any time, has been convicted of a felony for drug possession, distribution or use, unless such felony drug charge was based on possession or use of marijuana or marijuana concentrate that would not be a felony if the person were convicted of the offense on the date he or she applied for the license;

(13) Any entity whose directors, shareholders, partners or other persons having a financial interest in said entity do not meet the criteria set forth above;

(14) Any person who employs another person at a retail marijuana hospitality and sales establishment who has not submitted fingerprints for a criminal record history check or whose criminal record history check reveals the employee is ineligible; or

(15) Any person who has made a false, misleading or fraudulent statement on his or her application.

(b) No licensee shall employ or contract with any person to perform work functions directly related to the possession, cultivation, dispensing, selling, or serving of marijuana any of the following:

(1) Any person who is not of good moral character satisfactory to the local licensing authority;

(2) Any person who is under twenty-one (21) years of age;

(3) Any person who is not currently a resident of Colorado;

(4) Any person who has discharged a sentence for a felony conviction within the past five (5) years;

(5) Any person who, at any time, has been convicted of a felony for drug possession, distribution or use, unless such felony drug charge was based on possession or use of marijuana or marijuana concentrate that would not be a felony if the person were convicted of the offense on the date he or she applied for the license; or

(6) Any sheriff, deputy sheriff, police officer, prosecuting officer, and State or local licensing authority or any of its members, inspectors or employees.

(c) Jurisdiction.

(1) In investigating the qualifications described herein, the local licensing authority may have access to criminal history record information furnished by a criminal justice agency subject to any restrictions imposed by such agency. In the event the local licensing authority takes into consideration information concerning the applicant's criminal history record, the local licensing authority shall also consider any information provided by the applicant regarding such criminal history record, including but not limited to evidence of rehabilitation, character references, and educational achievements, especially those items pertaining to the period of time between the applicant's last criminal conviction and the consideration of the application for a license.

(2) As used in Subsection (c)(1) of this Section, "criminal justice agency" means any federal, State, or municipal court or any governmental agency or sub-unit of such agency that performs the administration of criminal justice pursuant to a statute or executive order and that allocates a substantial part of its annual budget to the administration of criminal justice.

Sec. 6-808. Issuance of License; Duration; Renewal.

(a) Each license shall be valid for one (1) year from the date of issuance.

(b) An application for the renewal of an existing license shall be made to the City Clerk between thirty (30) and sixty (60) days prior to the date of expiration of the license.

(c) A licensee may submit a late renewal application by paying a non-refundable late application fee in the amounts set forth in the City of Black Hawk Fee Schedule for a renewal application. However, in no case shall the City Clerk accept a renewal application after the expiration date of the current license.

(d) The filing of a completed renewal application shall extend the current license until a decision is made on the renewal.

(e) Licensee whose license expires and for which a renewal application has not been received by the expiration date shall be deemed to have forfeited its license.

Sec. 6-809. Authority to Impose Conditions on License.

The local licensing authority shall have the authority to impose such reasonable terms and conditions on a license as may be necessary to protect the public health, safety and welfare, and to obtain compliance with the requirements of this Article and applicable law.

Sec. 6-810. Display of License.

(a) Each license shall be limited to use at the premises specified in the application for such license.

(b) Each license shall be continuously posted in a conspicuous location at the retail marijuana hospitality and sales establishment.

Sec. 6-811. Management of Licensed Premises.

Licensees who are natural persons shall either manage the licensed premises themselves or employ a separate and distinct manager on the premises and report the name of such manager to the local licensing authority. Licensees that are entities shall employ a manager on the premises and report the name of the manager to the local licensing authority. All managers must be natural persons who are at least twenty-one (21) years of age. No manager shall be a person who has discharged a sentence for a felony conviction within the past five (5) years, or who has been convicted of a felony for drug possession, distribution or use, unless such felony drug charge was based on possession or use of marijuana or marijuana concentrate that would not be a felony if the person were convicted of the offense on the date he or she applied for the license.

Sec. 6-812. Change in Manager; Change in Financial Interest.

(a) Each licensee shall report any change in managers to the local licensing authority within thirty (30) days after the change. Such report shall include all information required for managers under Section 6-808 of this Article.

(b) Each licensee shall report in writing to the local licensing authority any transfer or change of financial interest in the license holder or in the retail marijuana hospitality and sales establishment that is the subject of the license. Such report must be filed with the local licensing authority within thirty (30) days after any such transfer or change. A report shall be required for any transfer of the capital stock of a public corporation totaling more than ten percent (10%) of the stock in

any one (1) year, as well as any transfer of a controlling interest in the corporation whenever a sufficient number of shares have been transferred to effectuate the transfer of a controlling interest. No person having or acquiring a financial interest in the retail marijuana hospitality and sales establishment that is the subject of a license shall be a person who has discharged a sentence for a felony conviction within the past five (5) years, or who has been convicted of a felony for drug possession, distribution or use, unless such felony drug charge was based on possession or use of marijuana or marijuana concentrate that would not be a felony if the person were convicted of the offense on the date he or she applied for the license.

(c) Whenever any licensee causes a change in its officers, directors or manager, and a license addendum is required to be filed with the State, an application fee as set forth by separate resolution shall be paid to the City at the time of filing the addendum with the City.

Sec. 6-813. Transfer of Ownership; Change of Location.

(a) Transfer of ownership. For a transfer of ownership, a license holder shall apply to the State and local licensing authority on forms provided by the State licensing authority. In considering whether to permit a transfer of ownership, the local licensing authority shall consider only the requirements of this Article, the Colorado Retail Marijuana Code, and the regulations promulgated in conformance therewith. The local licensing authority may hold a hearing on the application for a transfer of ownership, but such hearing shall not be held until a notice of such hearing has been posted on the licensed premises for a period of at least ten (10) days prior to such hearing, and the applicant has been provided at least ten (10) days prior notice of such hearing.

(b) Change of location. A licensee from another jurisdiction that has previously obtained a license from the State and any other local licensing authority as applicable may move his or her permanent location to the City of Black Hawk so long as the applicant and the new location conform to the requirements of this Article.

Sec. 6-814. Hours of Operation.

(a) The indoor area of a retail marijuana hospitality and sales establishment may operate from 7:00 a.m. to 2:00 a.m.

(b) The outdoor area of a retail marijuana hospitality and sales establishment may operate from 7:00 a.m. to midnight.

(c) A retail marijuana hospitality and sales establishment may operate seven (7) days a week.

Sec. 6-815. Source of Retail Marijuana and Retail Marijuana Products.

A retail marijuana hospitality and sales establishment may purchase retail marijuana or retail marijuana products from any retail marijuana hospitality and sales establishment, retail marijuana products manufacturer, or retail marijuana cultivation facility.

Sec. 6-816. Signage and Advertising.

All signage and advertising for a retail marijuana hospitality and sales establishment shall comply with all applicable State laws as well as the provisions of this Article and other applicable provisions of the Black Hawk Municipal Code, including Chapter 15 of the Black Hawk Municipal Code.

Sec. 6-817. Security Requirements.

(a) Security measures at retail marijuana hospitality and sales establishment shall include at a minimum the following:

(1) Security surveillance cameras installed to monitor all entrances, along with the interior and exterior of the premises, to discourage and facilitate the reporting of criminal acts and nuisance activities occurring at the premises;

(2) Robbery and burglary alarm systems which are professionally monitored and maintained in good working condition;

(3) A locking safe room within the licensed premises that is suitable for storage of all marijuana and cash stored overnight on the licensed premises;

(4) Exterior lighting that illuminates the exterior walls of the licensed premises and complies with applicable provisions of this Article and other applicable provisions of the Black Hawk Municipal Code; and

(5) Deadbolt locks on all exterior doors.

(b) All security recordings shall be preserved for at least seventy-two (72) hours by the licensee and be made available to the Black Hawk Police Department upon request for inspection.

Sec. 8-818. Required Notices.

There shall be posted in a conspicuous location in each retail marijuana hospitality and sales establishmentt, a legible sign containing the following warnings:

(1) That the use of marijuana or marijuana products may impair a person's ability to drive a motor vehicle or operate machinery, and that it is illegal under State law to drive a motor vehicle or to operate machinery when under the influence of or impaired by marijuana;

(2) That possession and distribution of marijuana is a violation of federal law; and

(3) That no one under the age of twenty-one (21) years is permitted on the premises.

Sec. 8-819. Prohibited Acts.

It shall be unlawful for any licensee to:

(a) Engage in multiple sale transactions to the same patron during the same business day when the establishment knows, or reasonably should have known, that the sales transaction would result in the patron possessing more than the sales limit established by the State Licensing Authority;

(b) Allow on-duty employees of the establishment to consume any marijuana in or on the premises;

(c) Distribute or allow distribution of any free samples of marijuana in the establishment;

(d) Sell any retail marijuana or retail marijuana products that contain nicotine or, if the sale of alcohol would require a license or permit, alcohol;

(e) Allow the consumption of alcohol on the premises;

(f) Allow the smoking of tobacco or tobacco products on the premises;

(g) Allow any activity that would require an additional license under Article 12 of Title 44 including but not limited to manufacturing or cultivation activity;

(h) Knowingly permit any activity or acts of disorderly conduct as described in C.R.S. § 18-9-106;

(i) Sell, serve, or permit the sale or serving of retail marijuana or retail marijuana products to any patron who shows signs of visible intoxication;

(j) Permit rowdiness, undue noise, or other disturbances or activity offensive to the average citizens or to the residents of the neighborhood in which the licensed premises is located; or

(k) Admit into the licensed premises of a retail marijuana hospitality and sales establishment any person who is under twenty-one (21) years of age.

Sec. 6-820. Visibility of Activities.

Any licensee under this Article must ensure that the display and consumption of any retail marijuana or retail marijuana products are not visible from outside the establishment.

Sec. 6-821. Disposal of Marijuana Byproducts.

The disposal of marijuana, marijuana products, byproducts and paraphernalia shall be done in accordance with plans and procedures approved in advance by the local licensing authority.

Sec. 6-822. Sales and Business License Required.

At all times that a business is validly operating under this Article XVIII of Chapter 6, the licensee shall also possess a valid business license issued in accordance with the Black Hawk Municipal Code.

Sec. 6-823. Sales Tax.

Each licensee shall collect and remit City sales tax on all retail marijuana, retail marijuana products, paraphernalia and other tangible personal property sold by the licensee, and shall further collect and remit any specific tax imposed on marijuana on all retail marijuana, retail marijuana products and paraphernalia.

Sec. 6-824. Required Books and Records.

(a) Every licensee shall maintain an accurate and complete record of all retail marijuana purchased, sold or dispensed by the retail marijuana hospitality and sales establishment in any usable form. Such record shall include the following:

(1) The total quantity of, and amount paid for, the retail marijuana and/or the retail marijuana product(s); and

(2) The date, time and location of each transaction.

(b) All transactions shall be kept in a numerical register in the order in which they occur.

(c) All records required to be kept under this Article must be kept in the English language in a legible manner and must be preserved and made available for inspection for a period of three (3) years after the date of the transaction. Information inspected by the Black Hawk Police Department or other City departments pursuant to this Article shall be used for regulatory and law enforcement purposes only and shall not be a matter of public record.

Sec. 6-825. Right of Entry.

(a) The Police Department or any authorized agent of the City may conduct routine inspections of the premises to ensure compliance with the requirements of this Article.

(b) If an emergency requires law requires law enforcement, firefighters, emergency medical service providers, or other public safety personnel to enter a

retail marijuana hospitality and sales establishment, ensure that all employees and patrons for the establishment cease all sales, consumption, and other activities until such personnel have completed their investigation or services and have left the premises.

Sec. 6-826. Permitted Activities.

Activities on the premises of a retail marijuana hospitality and sales establishment may include the smoking, vaping, or consumption of marijuana or marijuana products, provided that all other laws, rules and regulations, including without limitation, the requirements of the Colorado Clean Indoor Air Act, C.R.S. § 25-14-201, *et seq.*, and Chapter 7, Article VII, of this Code, applicable to such use and consumption at the particular location are met.

Sec. 6-827. Tracking.

Any licensee under this Article must track of its retail marijuana and retail marijuana products from the point that they are transferred from a retail marijuana store, retail marijuana products manufacturer, or retail marijuana cultivation facility to the point of sale to its patrons.

Sec. 6-828. Transaction Limits.

Any licensee under this Article must limit a patron to one transaction of nor more than the sales limit set by the State Licensing Authority.

Sec. 6-829. Packaging and Labeling.

Any licensee under this Article, before allowing a patron to leave the licensed premises with any retail marijuana or retail marijuana products, package and label the marijuana and marijuana products in accordance with the state procedures under C.R.S. § 44-12-202(3)(a)(VIII) and (3)(d)(II).

Sec. 6-830. Report of Disorderly Conduct.

Any licensee under this Article must operate the establishment in a decent, orderly, and respectable manner and shall immediately report to the Police Department any unlawful or disorderly act or conduct committed at or in the retail marijuana hospitality and sales establishment.

Sec. 6-831. Responsible Vendor Training.

Any licensee under this Article must ensure that all employees of the establishment have successfully completed an annual Responsible Vendor Training Program pursuant to C.R.S. § 44-11-1101.

Sec. 6-832. Education Materials

(a) Any licensee under this Article must provide education materials regarding the safe consumption of marijuana as required under state law.

(b) Any licensee under this Article must maintain a record of all education materials for inspection by state and local licensing authorities and law enforcement.

Sec. 6-833. Nonrenewal, Suspension or Revocation of License.

(a) The local licensing authority may, after notice and hearing, suspend, revoke or refuse to renew a license for good cause, including suspension or revocation of the licensee's State license. The local licensing authority is authorized to adopt rules and procedures governing the conduct of such hearings.

(b) The local licensing authority may, in its discretion, revoke or elect not to renew any license if it determines that the licensed premises has been inactive, without good cause, for at least one (1) year.

Sec. 6-834. Violations and Penalties.

In addition to the possible denial, suspension, revocation or nonrenewal of a license under the provisions of this Article, any person, including, but not limited to, any licensee, manager or employee of a retail marijuana hospitality and sales establishment, or any customer of such business, who violates any of the provisions of this Article, shall be subject to the following penalties:

(1) It shall be a misdemeanor offense for any person to violate any provision of this Article. Any person convicted of having violated any provision of this Article shall be punished as set forth in Section 1-73 of the Black Hawk Municipal Code.

(2) The operation of a retail marijuana establishment without a valid license issued pursuant to this Article may be enjoined by the City in an action brought in a court of competent jurisdiction, including the Black Hawk Municipal Court.

(3) The operation of a retail marijuana establishment without a valid license issued pursuant to this Article is also specifically determined to be a public nuisance pursuant to Section 7-2 of the Black Hawk Municipal Code.

Sec. 6-835. No City Liability; Indemnification.

(a) By accepting a license issued pursuant to this Article, the licensee waives and releases the City, its officers, elected officials, employees, attorneys and agents from any liability for injuries, damages or liabilities of any kind that result from any arrest or prosecution of retail marijuana establishment owners, operators,

employees, clients or customers for a violation of State or federal laws, rules or regulations.

(b) By accepting a license issued pursuant to this Article, all licensees, jointly and severally, if more than one (1), agree to indemnify, defend and hold harmless the City, its officers, elected officials, employees, attorneys, agents, insurers and self-insurance pool against all liability, claims and demands on account of any injury, loss or damage, including, without limitation, claims arising from bodily injury, personal injury, sickness, disease, death, property loss or damage, or any other loss of any kind whatsoever arising out of or in any manner connected with the operation of the retail marijuana establishment that is the subject of the license.

Sec. 6-836. No Waiver of Governmental Immunity.

In adopting this Article, the City Council is relying on and does not waive or intend to waive by any provision of this Article, the monetary limitations or any other rights, immunities and protections provided by the Colorado Governmental Immunity Act, Section 24-10-101, *et seq*., C.R.S., as from time to time amended, or any other limitation, right, immunity, or protection otherwise available to the City, its officers or its employees.

Sec. 6-837. Other Laws Remain Applicable.

(a) To the extent the State has adopted or adopts in the future any additional or stricter law or regulation governing the sale or distribution of retail marijuana or retail marijuana products, the additional or stricter regulation shall control the establishment or operation of any retail marijuana establishment in the City. Compliance with any applicable State law or regulation shall be deemed an additional requirement for issuance or denial of any license under this Article, and noncompliance with any applicable State law or regulation shall be grounds for revocation or suspension of any license issued hereunder.

(b) Any licensee may be required to demonstrate, upon demand by the local licensing authority or by law enforcement officers that the source and quantity of any marijuana found upon the licensed premises are in full compliance with any applicable State law or regulation.

(c) If the State prohibits the sale or other distribution of marijuana through retail marijuana hospitality and sales establishment, any license issued hereunder shall be deemed immediately revoked by operation of law, with no ground for appeal or other redress on behalf of the licensee.

(d) The issuance of any license pursuant to this Article shall not be deemed to create an exception, defense or immunity to any person in regard to any potential criminal liability the person may have for the cultivation, possession, sale, distribution or use of marijuana.

Sec. 6-838. Other Laws Remain Applicable.

(a) To the extent the State has adopted or adopts in the future any additional or stricter law or regulation governing the sale or distribution of retail marijuana or retail marijuana products, the additional or stricter regulation shall control the establishment or operation of any retail marijuana establishment in the City. Compliance with any applicable State law or regulation shall be deemed an additional requirement for issuance or denial of any license under this Article, and noncompliance with any applicable State law or regulation shall be grounds for revocation or suspension of any license issued hereunder.

(b) Any licensee may be required to demonstrate, upon demand by the local licensing authority or by law enforcement officers that the source and quantity of any marijuana found upon the licensed premises are in full compliance with any applicable State law or regulation.

(c) If the State prohibits the sale or other distribution of marijuana through retail marijuana hospitality and sales establishment, any license issued hereunder shall be deemed immediately revoked by operation of law, with no ground for appeal or other redress on behalf of the licensee.

(d) The issuance of any license pursuant to this Article shall not be deemed to create an exception, defense or immunity to any person in regard to any potential criminal liability the person may have for the cultivation, possession, sale, distribution or use of marijuana.

Sec. 6-839. Rules and Regulations.

The City Manager shall have the authority from time to time to adopt, amend, alter and repeal administrative rules and regulations, and file the same with the City Clerk, as may be necessary for the proper administration of this Article.

Sec. 6-840. Judicial Review.

The City Manager shall have the authority from time to time to adopt, amend, alter and repeal administrative rules and regulations, and file the same with the City Clerk, as may be necessary for the proper administration of this Article.

Section 4. Safety Clause. The City Council hereby finds, determines, and declares that this Ordinance is promulgated under the general police power of the City of Black Hawk, that it is promulgated for the health, safety, and welfare of the public, and that this Ordinance is necessary for the preservation of health and safety and for the protection of public convenience and welfare. The City Council further determines that the Ordinance bears a rational relation to the proper legislative object sought to be attained.

Section 5. Severability. If any clause, sentence, paragraph, or part of this Ordinance or the application thereof to any person or circumstances shall for any reason be adjudged by a

court of competent jurisdiction invalid, such judgment shall not affect application to other persons or circumstances.

Section 6. Effective Date. The City Clerk is directed to post the Ordinance as required by the Charter. This Ordinance shall become effective upon posting by the City Clerk.

READ, PASSED AND ORDERED POSTED this 13th day of January, 2021.

_____
David D. Spellman, Mayor

ATTEST:

_____
Melissa A. Greiner, CMC, City Clerk

CITY OF BLACK HAWK
REQUEST FOR COUNCIL ACTION

SUBJECT: Amendment of Chapter 6 of the Black Hawk Municipal Code.

RECOMMENDATION: Staff recommends the following motion to the Mayor and Board of Aldermen:

MOTION TO APPROVE Council Bill 1, A Bill for an Ordinance Amending Chapter 6 of the Black Hawk Municipal Code and Adding New Article XXI Creating a Licensing System for Retail Marijuana Hospitality and Sale Establishments

AGENDA DATE: January 13, 2021

FUNDING SOURCE: N/A

STAFF PERSON RESPONSIBLE: Corey Y. Hoffmann

DOCUMENTS ATTACHED: Council Bill 1

RECORD: [ ]Yes [X]No

CITY ATTORNEY REVIEW: [Y]Yes [ ]N/A

SUBMITTED BY:

Melissa A. Greiner
City Clerk/Administrative Services Director

REVIEWED BY:

Stephen N. Cole
City Manager

COUNCIL BILL 2
ORDINANCE 2021-2
AN ORDINANCE AMENDING SECTIONS 7-154 AND 10-203 OF THE BLACK HAWK MUNICIPAL CODE RELATING TO TOBACCO AGE LIMITS

STATE OF COLORADO
COUNTY OF GILPIN
CITY OF BLACK HAWK

COUNCIL BILL NUMBER: CB2

ORDINANCE NUMBER: 2021-2

TITLE: AN ORDINANCE AMENDING SECTIONS 7-154 AND 10-203 OF THE BLACK HAWK MUNICIPAL CODE RELATING TO TOBACCO AGE LIMITS

WHEREAS, the Colorado General Assembly enacted House Bill 20-1001 ("HB 20-1001");

WHEREAS, HB 20-1001 requires municipalities to increase the age to purchase, possess, use, or consume tobacco products to twenty-one (21) years of age;

WHEREAS, HB 20-1001 requires municipalities to increase the age to enter cigar-tobacco bars to twenty-one years of age; and

WHEREAS, the Board of Aldermen wish to comply with state law.

BE IT ORDAINED BY THE CITY COUNCIL OF THE CITY OF BLACK HAWK, GILPIN COUNTY:

Section 1. Section 7-154 of the Black Hawk Municipal Code is amended to read as follows:

Sec. 7-154. Exceptions to Smoking Regulations.

* * *

(5) A cigar-tobacco bar, provided that the cigar-tobacco bar shall not expand its size or change its location from the size and location in which it existed as of December 31, 2005, and provided that the cigar-tobacco bar displays signage in at least one (1) conspicuous place and at least four (4) inches by six (6) inches in size, stating: ~~"Smoking allowed. Children under eighteen years of age must be accompanied by a parent or guardian."~~ **"Smoking allowed. Persons under twenty-one years of age may not enter."**

* * *

Section 2. Section 10-203 of the Black Hawk Municipal Code is amended to read as follows:

Sec. 10-203. Distribution of Cigarettes and Tobacco Products to Minors.

(a) It is unlawful for any person eighteen (18) years of age or older to furnish to any person who is under ~~eighteen (18)~~ **twenty-one (21)** years of age, by gift, sale or other means any cigarettes or tobacco products as defined by Section 39-28.5-101(5), C.R.S.

(b) It shall be unlawful for any person under the age of ~~eighteen (18)~~ **twenty-one** years to attempt to purchase or obtain, either directly or through an intermediary, any cigarette or tobacco products as defined by Section 39-28.5-101(5), C.R.S.

* * *

(d) It is unlawful for any person to sell or offer to sell any cigarette or tobacco products as defined by Section 39-28.5-101(5) C.R.S., other than a smokeless tobacco product as defined by Section 18-13-121(4)(a), C.R.S., by use of a vending machine or any coin-operated machine, that does not display a warning sign placed in a prominent place on such machine. The warning sign shall have a minimum height of three (3) inches and a width of six (6) inches, and shall read as follows:

WARNING

IT IS ILLEGAL ~~FOR~~ **TO SELL CIGARETTES, TOBACCO PRODUCTS, OR NICOTINE PRODUCTS TO** ANY PERSON UNDER ~~EIGHTEEN (18)~~ **TWENTY-ONE (21)** YEARS OF AGE. ~~TO PURCHASE CIGARETTES AND TOBACCO PRODUCTS AND, UPON CONVICTION, A FIFTY DOLLAR ($50.00) FINE MAY BE IMPOSED.~~ **STATE LAW REQUIRES THAT, TO PURCHASE CIGARETTES, TOBACCO PRODUCTS, OR NICOTINE PRODUCTS AT THIS RETAIL LOCATION, A PERSON MUST PRESENT A VALID GOVERNMENT-ISSUED PHOTOGRAPHIC IDENTIFICATION AT THE TIME OF PURCHASE IF THE PERSON APPEARS TO BE UNDER FIFTY YEARS OF AGE.**

Section 3. Safety Clause. The City Council hereby finds, determines, and declares that this Ordinance is promulgated under the general police power of the City of Black Hawk, that it is promulgated for the health, safety, and welfare of the public, and that this Ordinance is necessary for the preservation of health and safety and for the protection of public convenience and welfare. The City Council further determines that the Ordinance bears a rational relation to the proper legislative object sought to be attained.

Section 4. Severability. If any clause, sentence, paragraph, or part of this Ordinance or the application thereof to any person or circumstances shall for any reason be adjudged by a court of competent jurisdiction invalid, such judgment shall not affect application to other persons or circumstances.

Section 5. Effective Date. The City Clerk is directed to post the Ordinance as required by the Charter. This Ordinance shall become effective upon posting by the City Clerk.

READ, PASSED AND ORDERED POSTED this 13th day of January, 2021.

_____
David D. Spellman, Mayor

ATTEST:

_____
Melissa A. Greiner, CMC, City Clerk

CITY OF BLACK HAWK
REQUEST FOR COUNCIL ACTION

SUBJECT: Amendment of Sections 7-154 and 10-203 of the Black Hawk Municipal Code.

RECOMMENDATION: Staff recommends the following motion to the Mayor and Board of Aldermen:

MOTION TO APPROVE Council Bill 2, A Bill for an Ordinance Amending Sections 7-154 and 10-203 of the Black Hawk Municipal Code Relating to Tabacco Age Limits

SUMMARY AND BACKGROUND OF SUBJECT MATTER:
The Colorado General Assembly enacted House Bill 20-1001 ("HB 20-1001") which requires municipalities to increase the age to purchase, possess, use, or consume tobacco products to twenty-one (21) years of age and requires municipalities to increase the age to enter cigar-tobacco bars to twenty-one years of age.

AGENDA DATE: January 13, 2021

FUNDING SOURCE: N/A

STAFF PERSON RESPONSIBLE: Corey Y. Hoffmann

DOCUMENTS ATTACHED: Council Bill 2

RECORD: [ ]Yes [X]No

CITY ATTORNEY REVIEW: [Y]Yes [ ]N/A

SUBMITTED BY:

Melissa A. Greiner
City Clerk/Administrative Services Director

REVIEWED BY:

Stephen N. Cole
City Manager

COUNCIL BILL 3
ORDINANCE 2021-3
AN ORDINANCE APPROVING THE AMENDED AND RESTATED OPTION AND LEASE AGREEMENT WITH VERTICAL BRIDGE DEVELOPMENT, LLC FOR THE INSTALLATION AND MAINTENANCE OF A CELLULAR TOWER FACILITY ON CITY PROPERTY ON MINERS MESA

STATE OF COLORADO
COUNTY OF GILPIN
CITY OF BLACK HAWK

COUNCIL BILL NUMBER: CB3

ORDINANCE NUMBER: 2021-3

TITLE: AN ORDINANCE APPROVING THE AMENDED AND RESTATED OPTION AND LEASE AGREEMENT WITH VERTICAL BRIDGE DEVELOPMENT, LLC FOR THE INSTALLATION AND MAINTENANCE OF A CELLULAR TOWER FACILITY ON CITY PROPERTY ON MINERS MESA

BE IT ORDAINED BY THE CITY COUNCIL OF THE CITY OF BLACK HAWK, GILPIN COUNTY:

Section 1. The City of Black Hawk hereby approves the Amended and Restated Option and Lease Agreement between the City of Black Hawk and Vertical Bridge Development, LLC for the installation and maintenance of a cellular tower facility on City property on Miners Mesa, as more particularly described in **Exhibit A**, attached hereto and incorporated herein by this reference. The Mayor is hereby authorized to execute the Amended and Restated Option and Lease Agreement and associated documents on behalf of the City.

Section 2. All prior approvals of the Lease Agreement with Vertical Bridge Development, LLC for the installation and maintenance of a cellular tower facility on City property on Miners Mesa by the City are hereby repealed, and the Amended and Restated Option and Lease Agreement is and shall be the only approved Lease Agreement between the City and Vertical Bridge Development, LLC for the installation and maintenance of a cellular tower facility on City property on Miners Mesa.

Section 3. Safety Clause. The City Council hereby finds, determines, and declares that this Ordinance is promulgated under the general police power of the City of Black Hawk, that it is promulgated for the health, safety, and welfare of the public, and that this Ordinance is necessary for the preservation of health and safety and for the protection of public convenience and welfare. The City Council further determines that the Ordinance bears a rational relation to the proper legislative object sought to be attained.

Section 4. Severability. If any clause, sentence, paragraph, or part of this Ordinance or the application thereof to any person or circumstances shall for any reason be adjudged by a court of competent jurisdiction invalid, such judgment shall not affect application to other persons or circumstances.

Section 5. Effective Date. The City Clerk is directed to post the Ordinance as required by the Charter. This Ordinance shall become effective upon posting by the City Clerk.

READ, PASSED AND ORDERED POSTED this 13th day of January, 2021.

_____
David D. Spellman, Mayor

ATTEST:

_____
Melissa A. Greiner, CMC, City Clerk

EXHIBIT A

Landlord:
City of Black Hawk
201 Selak Street
Black Hawk, CO 80422

Tenant:
Vertical Bridge Development, LLC
750 Park of Commerce Drive, Suite 200
Boca Raton, FL 33487
Site #: US-CO-5063
Site Name: Blackhawk

AMENDED AND RESTATED OPTION AND LEASE AGREEMENT

THIS AMENDED AND RESTATED OPTION AND LEASE AGREEMENT (this "**Agreement**") is made this ____ day of _____, 20___ (the "**Effective Date**"), by and between City of Black Hawk, a Colorado municipal corporation (the "**Landlord**"), whose address is 201 Selak Street, Black Hawk, CO 80422, and Vertical Bridge Development, LLC, a Delaware limited liability company (the "**Tenant**"), whose address is 750 Park of Commerce Drive, Suite 200, Boca Raton, FL 33487.

WHEREAS, the Landlord owns certain real property located in the County of Gilpin, in the state of Colorado, that is more particularly described and/or depicted in **Exhibit 1** attached hereto (the "**Property**"); and,

WHEREAS, the Tenant desires to lease from Landlord a certain portion of the Property measuring approximately 50' x 50' (approximately 2,500 square feet) (the "**Premises**"), which Premises is more particularly described and/or depicted in **Exhibit 2** attached hereto, for the erection of a communications tower.

NOW THEREFORE, for good and valuable consideration, the receipt and sufficiency of which is hereby acknowledged, the parties hereto agree:

1. OPTION TO LEASE.

(a) Landlord grants to Tenant the exclusive option to lease the Premises.

(b) From and after the date of this Agreement as set forth above for the time period set forth below (the "**Option Period**"), and at any time during the Term of this Agreement, Tenant and its agents, engineers, surveyors and other representatives will have the right to enter upon the Property to inspect, examine, conduct soil borings, drainage testing, material sampling, and other geological or engineering tests or studies of the Property (collectively, the "**Tests**"), to apply for and obtain licenses, permits, approvals, or other relief required of or deemed necessary or appropriate at Tenant's sole discretion for its use of the Premises and include, without limitation, applications for zoning variances, zoning ordinances, amendments, special use permits, and construction permits (collectively, the "**Government Approvals**"), initiate the ordering and/or scheduling of necessary utilities, and otherwise to do those things on or off the Property that, in the opinion of Tenant, are necessary in Tenant's sole discretion to determine the physical condition of the Property, the environmental history of the Property, Landlord's title to the Property and the feasibility or suitability of the Property for Tenant's Permitted Use, all at Tenant's expense. Tenant shall be authorized to apply for Government Approvals on behalf of Landlord and Landlord agrees to reasonably cooperate with such applications. Tenant will not be liable to Landlord or any third party on account of any pre-existing defect or condition on or with respect to the Property. Tenant will disclose any defects found during the investigation. Tenant will restore the Property to its condition as it existed at the commencement of the Option Period (as defined below), reasonable wear and tear and casualty not caused by Tenant

excepted. In addition, Tenant shall indemnify, defend and hold Landlord harmless from and against any and all injury, loss, damage or claims arising directly out of Tenant's Tests.

(c) In consideration of Landlord granting Tenant the Option Period, Tenant agrees to pay Landlord the sum of Three Thousand Dollars ($3,000.00), the receipt and sufficiency is hereby acknowledged as received by Landlord. The Option Period will be for an initial term of one (1) year from the Effective Date (the "**Initial Option Period**") and may be renewed by Tenant for an additional one (1) year upon written notification to Landlord and the payment of an additional Three Thousand Dollars ($3,000.00), the receipt and sufficiency is hereby acknowledged as received by Landlord.

(d) During the Initial Option Period and any extension thereof, Tenant may commence the Initial Term of this Agreement by notifying Landlord in writing. If Tenant commences the Initial Term, then Landlord leases the Premises to the Tenant subject to the terms and conditions of this Agreement. If Tenant does not commence this Agreement during the Initial Option Period or any extension thereof, this Agreement will terminate and the parties will have no further liability to each other.

2. TERM.

(a) This Agreement shall commence on the first day of the month in which Tenant begins construction (the "**Commencement Date**"). Unless extended or sooner terminated as herein provided, the initial term shall be for a period of five (5) years following the Commencement Date ("**Initial Term**").

(b) Tenant shall have the option to extend the Term of this Agreement for seven (7) successive terms of five (5) years each (each a "**Renewal Term**"). Each Renewal Term shall commence automatically, unless Tenant delivers notice to Landlord of its intent not to renew, such notice to be delivered not less than thirty (30) days prior to the end of the then-current Term. For purposes of this Agreement, "**Term**" shall mean the Initial Term and any applicable Renewal Term(s).

3. RENT.

(a) Tenant shall pay rent to Landlord beginning at Commencement Date a monthly rental payment of Two Thousand Dollars ($2,000.00) ("**Rent**"), at the address set forth above on or before the fifth (5th) day of each calendar month in advance. The initial Rent payment will be forwarded by Tenant to Landlord within thirty (30) days from Commencement Date.

(b) Beginning on the commencement date of the first Renewal Term and each five-year anniversary of each Renewal Term thereafter throughout the remainder of the Term and Renewal Term(s), if any, the Rent shall be increased by an amount equal to ten percent (10%) of the amount of the Rent for the previous Term or previous Renewal Term, as the case may be, which sum shall be payable in equal monthly installments in advance as herein set forth.

4. [INTENTIONALLY DELETED]

5. TAXES. Tenant shall pay any personal property taxes assessed on, or any portion of such taxes attributable to, the communication facility located on the Premises. Landlord shall pay when due all real property taxes and all other fees and assessments attributable to the Property and Premises. Tenant shall pay as additional Rent any increase in real property taxes levied against Premises, which are directly attributable to Tenant's use of the Premises (but not, however, taxes attributable to periods prior to the Commencement Date such as roll-back or greenbelt assessments) if Landlord furnishes proof of such increase to Tenant. In the event that Landlord fails to pay when due any taxes affecting the Premises or any easement relating to the Premises, Tenant shall have the right but not the obligation to pay such taxes

and deduct the full amount of the taxes paid by Tenant on Landlord's behalf from future installments of Rent. Notwithstanding the foregoing, Tenant shall not have the obligation to pay any tax, assessment, or charge that Tenant is disputing in good faith in appropriate proceedings prior to a final determination that such tax is properly assessed, provided that no lien attaches to the Property.

6. USE. The Premises are being leased for the purpose of erecting, installing, operating and maintaining radio or communications towers, transmitting and receiving equipment, antennas, dishes, mounting structures, equipment shelters and other supporting structures, and related equipment (collectively, the "**Communication Facilities**"). Tenant may, subject to the foregoing, make any improvement, alteration or modification to the Premises as are deemed appropriate by Tenant for the permitted use herein. Tenant shall have the right to clear the Premises of any trees, vegetation, or undergrowth which, in Tenant's sole opinion, interferes with Tenant's use of the Premises for the intended purposes. Tenant shall have the exclusive right to install and operate upon the Premises communications towers, buildings, equipment, antennas, dishes, fencing, and other accessories related thereto, and to alter, supplement, and/or modify same as may be necessary so long as all applicable zoning and building requirements are met.

7. ACCESS AND UTILITIES. At all times during the Term of this Agreement, Tenant, and its guests, agents, customers, lessees, sublessees and assigns shall have the unrestricted, exclusive right to use, and shall have free access to, the Premises seven (7) days a week, twenty-four (24) hours a day. Landlord for itself, its successors and assigns, hereby grants and conveys unto Tenant, its customers, employees, agents, invitees, sublessees, sublicensee's, successors and assigns a nonexclusive easement (i) for ingress and egress, (ii) for construction, installation, maintenance, and operation of the Communication Facilities, and (iii) for the construction, installation, operation and maintenance of underground electric and other utility facilities (including wires, poles, cables, conduits and appurtenant equipment), with the right to reconstruct, improve, add to, enlarge, change and remove such facilities, over, across and through any easement for the benefit of and access to the Premises, subject to the terms and conditions herein set forth. Landlord agrees to cooperate with Tenant's efforts to obtain such utilities and services. If there are utilities already existing on the Premises which serve the Premises, Tenant may utilize such utilities and services. The rights granted to Tenant herein shall also include the right to partially assign its rights hereunder to any public or private utility company or authority to facilitate the uses contemplated herein, and all other rights and privileges reasonably necessary for Tenant's safe and efficient use and enjoyment of the easements for the purposes described above. Notwithstanding anything to the contrary that may be set forth herein, Tenant agrees that all utilities to be installed by Tenant shall be underground.

8. EQUIPMENT, FIXTURES AND REMOVAL. All improvements, equipment or other property attached to or otherwise brought onto the Premises shall at all times be the personal property of Tenant and/or its subtenants and licensees. Tenant or its customers shall have the right to erect, install, maintain, and operate on the Premises such equipment, structures, fixtures, signs, and personal property as Tenant may deem necessary or appropriate, and such property, including the equipment, structures, fixtures, signs, and personal property currently on the Premises, shall not be deemed to be part of the Premises, but shall remain the property of Tenant or its customers provided any improvements comply with applicable zoning and building codes and requirements. Within ninety (90) days after the expiration or earlier termination of this Agreement (the "**Removal Period**"), Tenant shall remove its improvements including any tower and restore the Premises to grade and perform all obligations under this Agreement during the Removal Period, including without limitation, the payment of Rent at the rate in effect upon the expiration or termination of this Agreement.

9. ASSIGNMENT AND SUBLEASE. This Agreement may be sold, assigned or transferred by Tenant without any approval or consent of Landlord to Tenant's lender, principal, affiliates, subsidiaries,

subsidiaries of its principal or to any entity which acquires all of or substantially all of Tenant's assets or ownership interests by reasons of merger, acquisition or other business reorganization (a "**Pre-Approved Assignment**"). As to transfers or assignments which do not constitute a Pre-Approved Assignment, Tenant will provide notice to Landlord, to include the name, address and contact information of the assignee of such assignment. Upon any assignment by Tenant pursuant to the foregoing, Tenant will be relieved of all liability hereunder. Notwithstanding anything to the contrary herein including the foregoing set forth in this Section, Tenant shall have the exclusive right to sublease or grant licenses without Landlord's consent to use the radio tower or any other tower or structure or equipment on the Premises, but no such sublease or license shall relieve or release Tenant from its obligations under this Agreement. Landlord may assign this Agreement only in its entirety and only to any person or entity who or which acquires fee title to the Property, subject to Section 16. Landlord may not subdivide the Property without Tenant's prior written consent.

10. COVENANTS, WARRANTIES AND REPRESENTATIONS.

(a) Landlord warrants and represents that it is the owner in fee simple of the Premises, free and clear of all liens and encumbrances except as to those which may have been disclosed to Tenant, in writing prior to the execution hereof, and that it alone has full right to lease the Premises for the Term set out herein.

(b) Landlord shall not do or knowingly permit anything that will interfere with or negate any special use permit or approval pertaining to the Premises or cause any tower on the Premises to be in nonconformance with applicable local, state, or federal laws. Landlord shall cooperate with Tenant in any effort by Tenant to obtain certificates, permits, licenses and other approvals that may be required by any governmental authorities. Landlord agrees to execute any necessary applications, consents or other documents as may be reasonably necessary for Tenant to apply for and obtain the proper zoning approvals required to use and maintain the Premises and the tower site.

(c) Landlord has complied and shall comply with all laws with respect to the Premises. No asbestos-containing thermal insulation or products containing PCB, formaldehyde, chlordane, or heptachlor or other hazardous materials have been placed on or in the Premises by Landlord or, to the knowledge of Landlord, by any prior owner or user of the Premises. To the knowledge of Landlord, there has been no release of or contamination by hazardous materials on the Premises.

(d) Tenant shall have access to all utilities required for the operation of the Tenant's improvements on the Premises that are existing on the Property.

(e) There currently exist no licenses, sublicenses, or other agreements, written or oral, granting to any party or parties the right of use or occupancy of any portion of the Premises; there are no outstanding options or rights of first refusal to purchase the Premises or any portion thereof or interest therein; and there are no parties (other than Landlord) in possession of the Premises.

11. HOLD OVER TENANCY. Should Tenant or any assignee, sublessee or licensee of Tenant hold over the Premises or any part thereof after the expiration of this Agreement, such holdover shall constitute and be construed as a tenancy from month-to-month only, but otherwise upon the same terms and conditions.

12. INDEMNITIES. Tenant agrees to indemnify, defend and hold harmless Landlord, its elected officials, employees, agents, representatives, successors, assigns, (collectively, the "**Landlord Parties**"), from and against all claims and liabilities (including reasonable attorneys' fees and court costs) ("**Losses**") caused by or arising out of (i) Tenant's breach of any of its obligations, covenants, representations or warranties contained herein, or (ii) Tenant's acts or omissions with regard to the Agreement. Tenant will

indemnify the Landlord Parties from and against any mechanic's liens or liens of contractors and sub-contractors engaged by or through Tenant.

13. WAIVERS. Landlord hereby waives any and all lien rights it may have, statutory or otherwise, in and to the Communication Facilities or any portion thereof, regardless of whether or not such is deemed real or personal property under applicable laws. Landlord will not assert any claim whatsoever against Tenant for loss of anticipatory profits or any other indirect, special, incidental or consequential damages incurred by Landlord as a result of the construction, maintenance, operation or use of the Premises by Tenant.

14. INSURANCE. Tenant shall maintain insurance as follows:

(a) Worker's Compensation Insurance to cover obligations imposed by applicable law for any employee engaged in the performance of the work by Tenant under this Agreement with minimum limits of Five Hundred Thousand Dollars ($500,000) each incident, Five Hundred Thousand Dollars ($500,000) disease—policy limit, and Five Hundred Thousand Dollars ($500,000) disease—each employee.

(b) General Public Liability Insurance to be written with a limit of liability of not less than Three Million Dollars ($3,000,000) for all damages arising out of bodily injury, personal injury (including coverage for employee and contractual acts), including death, at any time resulting therefrom, sustained by any one person and not less than Two Million Dollars ($2,000,000) for all damages arising out of bodily injury, including death, at any time resulting therefrom, sustained by two or more persons in any one accident. This policy shall also include coverage for blanket contractual and independent contractor risks. The limits of General Public Liability Insurance for broad form property damage (including products and completed operations) shall be not less than One Million Dollars ($1,000,000) for all damages arising out of injury to or destruction of property in any one (1) accident and not less than Two Million Dollars ($2,000,000) for all damages arising out of injury to, or destruction of property, including the City's property, during the policy period. The policy shall contain a severability of interests provision.

(c) To the extent that liability results from the acts or omissions of the Tenant, all Insurance Policies and Certificates of Insurance issued for this project shall name as additional insured(s), the City and the City's officers and employees. The Tenant shall be solely responsible for any deductible losses under any policy required herein.

(d) The certificate of insurance provided by the Tenant shall be completed by the Tenant's insurance agent as evidence that policies providing the required coverages, conditions, and minimum limits are in full force and effect, and shall be reviewed and approved by the City prior to commencement of this Agreement. No other form of certificate shall be used. The insurance coverage provided for herein may be maintained pursuant to master policies of insurance covering other tower locations of Tenant and its corporate affiliates. All insurance policies required to be maintained by Tenant hereunder shall be with responsible insurance companies, authorized to do business in the state where the Premises are located if required by law, and shall provide for cancellation only upon ten (10) days' prior written notice to Landlord. Tenant shall evidence such insurance coverage by delivering to Landlord, if requested, a copy of all such policies or, at Tenant's option, certificates in lieu thereof issued by the insurance companies underwriting such risks.

(e) Failure on the part of the Tenant to procure or maintain policies providing the required coverages, conditions, and minimum limits shall constitute a material breach of this Agreement.

The parties hereto understand and agree that the City is relying on, and does not waive or intend to waive by any provision of this contract, the monetary limitations or any other rights, immunities, and protections provided by the Colorado Governmental Immunity Act, 24-10-101 et seq., C.R.S., as from time to time amended, or otherwise available to the Owner, its officers or employees.

15. INTERFERENCE. During the Term of this Agreement, Landlord, its successors and assigns, will not grant any ground lease, license, or easement with respect to the Premises. In addition, during the Term of this Agreement, Landlord, its successors and assigns, will not grant any ground lease, license, or easement with respect to the Property (outside of the Premises) and any property adjacent or contiguous to the Property that is fee owned by the Landlord: (a) for any of the uses contemplated in Section 6 herein; or (b) if such lease, license, or easement would detrimentally impact Tenant's Communications Facilities or economic opportunities at the Premises, or the use thereof. Tenant acknowledges that an adjacent site is an active material storage and processing yard that will continue to operate. Landlord shall not cause or permit the construction of radio or communications towers on the Property or on any other property of Landlord adjacent or contiguous to or in the immediate vicinity of the Property, except for towers constructed by Tenant. Landlord and Tenant intend by this Agreement for Tenant (and persons deriving rights by, through, or under Tenant) to be the sole parties to market, use, or sublease any portion of the Property for wireless communications or broadcast facilities during the Term of this Agreement. Landlord agrees that this restriction on the use of the Property is commercially reasonable, not an undue burden on Landlord, not injurious to the public interest, and shall be specifically enforceable by Tenant (and persons deriving rights by, through or under Tenant) in a court of competent jurisdiction. The foregoing restriction shall run with the land and be binding on the successors and assigns of Landlord. Tenant acknowledges: the existence of a 50' Self Support Tower located approximately 2,160 feet due west of the Premises at Lat: 39.793064, Long: -105.497530; and, that this Agreement does not restrict any future facilities at the current premises where the SST is located.

16. RIGHT OF FIRST REFUSAL. In the event that Landlord determines to sell, transfer, license or otherwise convey any interest, whether fee simple interest, easement interest, leasehold, or otherwise, and whether direct or indirect by way of transfer of ownership interests in Landlord if Landlord is an entity, which interest underlies or affects any or all of the Premises (the "**ROFR Property**") to any third party, during the Option Period or Term, Landlord shall offer Tenant a right of first refusal to purchase the Premises (or such larger portion of Landlord's property that encompasses the Premises, if applicable) or such interest proposed to be conveyed. Landlord shall provide a copy of any offer to purchase or acquire, or any executed purchase agreement or letter of intent ("**Offer**"), to Tenant which copy shall include, at a minimum, the purchase or acquisition price, proposed closing date, and financing terms ("**Minimum Terms**"). Within thirty (30) days of receipt of such Offer, Tenant shall provide written notice to Landlord of Tenant's election to purchase the ROFR Property on the same Minimum Terms; provided, the closing date shall be no sooner than sixty (60) days after Tenant's purchase election notice. In such event, Landlord agrees to sell the ROFR Property to Tenant subject to Tenant's payment of the purchase price and compliance with a purchase and sale agreement to be negotiated in good faith between Landlord and Tenant. If Tenant provides written notice that it does not elect to exercise its rights of first refusal to purchase the ROFR Property, or if Tenant does not provide notice of its election within the thirty (30) day period, Tenant shall be deemed to have waived such right of first refusal only with respect to the specific Offer presented (and any subsequent Offers shall again be subject to Tenant's continuing right of first refusal hereunder), and Landlord shall be permitted to consummate the sale of the ROFR Property in accordance with the strict terms of the Offer ("**Permitted Sale**"). If Landlord does not consummate the Permitted Sale within ninety (90) days of the date of Tenant's waiver of its rights of first refusal, such Offer shall be deemed to have lapsed.

17. SECURITY. The parties recognize and agree that Tenant shall have the right to safeguard and protect its improvements located upon or within the Premises. Consequently, Tenant may elect, at its expense, to construct such enclosures and/or fences as Tenant reasonably determines to be necessary to

secure its improvements, including the tower(s), building(s), and related improvements situated upon the Premises. Tenant may also undertake any other appropriate means to restrict access to its communications towers, buildings, and related improvements.

18. FORCE MAJEURE. The time for performance by Landlord or Tenant of any term, provision, or covenant of this Agreement shall be deemed extended by time lost due to delays resulting from acts of God, strikes, civil riots, floods, material or labor restrictions by governmental authority, and any other cause not within the control of Landlord or Tenant, as the case may be.

19. CONDEMNATION. Notwithstanding any provision of this Agreement to the contrary, in the event of condemnation of the Premises, Tenant may seek an award for the value of Tenant's improvements on and/or at the Premises.

20. DEFAULT. The failure of Tenant or Landlord to perform any of the covenants of this Agreement shall constitute a default. The non-defaulting party shall give the other written notice of such default, and the defaulting party shall cure such default within thirty (30) days after receipt of such notice. In the event any such default cannot reasonably be cured within such thirty (30) day period, if the defaulting party shall proceed promptly after the receipt of such notice to cure such default, and shall pursue curing such default with due diligence, the time for curing shall be extended for such period of time as may be necessary to complete such curing, however, in no event shall this extension of time be in excess of sixty (60) days, unless agreed upon by the non-defaulting party.

21. REMEDIES. Should the defaulting party fail to cure a default under this Agreement, the other party shall have all remedies available either at law or in equity, including the right to terminate this Agreement.

22. [**INTENTIONALLY DELETED**]

23. ADDITIONAL TERMINATION RIGHT. If at any time during the Term of this Agreement, Tenant determines, in its sole and absolute discretion, with or without cause, that the Premises is no longer suitable or desirable for Tenant's intended use and/or purposes, Tenant shall have the right to terminate this Agreement upon sixty (60) days prior written notice to Landlord.

24. PRIOR AGREEMENTS. The parties hereby covenant, recognize and agree that the terms and provisions of this Agreement shall constitute the sole embodiment of the arrangement between the parties with regard to the Premises, and that all other written or unwritten agreements, contracts, or leases by and between the parties with regard to the Premises are hereby terminated, superseded and replaced by the terms hereof.

25. [**INTENTIONALLY DELETED**]

26. [**INTENTIONALLY DELETED**]

27. [**INTENTIONALLY DELETED**]

28. [**INTENTIONALLY DELETED**]

29. QUIET ENJOYMENT. So long as Tenant is not in default under this Agreement beyond the applicable notice and cure period, Landlord covenants and agrees that Tenant shall peaceably and quietly hold and enjoy the Premises throughout the Term, without any hindrance, molestation or ejection by Landlord, its successors or assigns or by those claiming by, through or under them.

30. NOTICES. All notices, requests, claims, demands, and other communications hereunder shall be in writing and may be hand delivered (provided the deliverer provides proof of delivery) or sent by nationally-established overnight courier that provides proof of delivery, or certified or registered mail (postage prepaid, return receipt requested). Notice shall be deemed received on the date of delivery as

demonstrated by the receipt of delivery. Notices shall be delivered to a party at such party's address below, or to such other address that a party below may provide from time to time:

If to Landlord:	**If to Tenant:**	**If to Lender:**
City of Black Hawk	Vertical Bridge Development, LLC	Toronto Dominion (Texas) LLC
201 Selak Street	750 Park of Commerce Drive	31 West 52nd Street
P.O. Box 68	Suite 200	New York, NY 10019
Black Hawk, CO 80422	Boca Raton, FL 33487	Attn: Admin Agent
Attn: City Clerk	Attn: General Counsel	Fax No. 416-982-5535

31. MISCELLANEOUS.

(a) Each party hereto warrants and represents that it has the necessary power and authority to enter into and perform its respective obligations under this Agreement.

(b) If any term of this Agreement is found to be void or invalid, such invalidity shall not affect the remaining terms of this Agreement, which shall continue in full force and effect.

(c) All attached exhibits are hereby incorporated by this reference as if fully set forth herein.

(d) Failure of party to insist on strict performance of any of the conditions or provisions of this Agreement, or failure to exercise any of a party's rights hereunder, shall not waive such rights.

(e) This Agreement shall be governed by and construed in accordance with the laws of the state in which the leased Premises are located.

(f) This Agreement constitutes the entire Agreement and understanding of the parties and supersedes all offers, negotiations and other lease agreements with regard to the leased Premises, including, without limitation a certain January 23, 2019 Option and Lease Agreement. There are no representations or understandings of any kind not set forth herein. Any amendment to this Agreement must be in writing and executed by both parties.

(g) This Agreement shall be binding upon and shall inure to the benefit of the parties hereto and their respective heirs, legal representatives, successors and assigns.

(h) A short-form Memorandum of Option to Lease (and a short-form Memorandum of Lease in the event Tenant exercises its option to lease the Premises) may be recorded at Landlord or Tenant's option in the form as depicted in **Exhibit 3** and **Exhibit 4** attached hereto.

(i) Landlord shall keep the terms of this Agreement confidential, and shall not disclose any terms contained within this Agreement to any third party other than such terms as are set forth in the Memorandum of Option and Lease.

[SIGNATURES BEGIN ON NEXT PAGE]

IN WITNESS WHEREOF, the parties hereto have executed this Agreement as of the date last signed by a party hereto.

WITNESSES:

_____
Name:_____

_____
Name:_____

LANDLORD:

City of Black Hawk
a Colorado municipal corporation

By: _____
Name:_____
Title:_____
Date:_____

WITNESSES:

TENANT:

Vertical Bridge Development, LLC
a Delaware limited liability company

Name:_____

Name:_____

By:_____
Name:_____
Title:_____
Date:_____

EXHIBIT 1

Legal Description of the Property (Parent Parcel)
(may be updated by Tenant upon receipt of final legal description from title)

Miners Mesa Subdivision Filing No. 4; Lot 2 Block 1 and Tract A

EXHIBIT 2

Premises
(The below may be replaced with a final survey and legal description of the Premises)

50'x50' LEASE AREA LEGAL DESCRIPTION:

A parcel of land over and across Lot 2 Block 1, Miners Mesa Subdivision Filing No. 4 as described at Reception No. 147815 of the Public Records of Gilpin County (Parent Tract), located in the North Half of Section 18, Township 3 South, Range 72 West of the 6th Principal Meridian, City of Black Hawk, County of Gilpin, State of Colorado, said parcel being more particularly described as follows:

For the purpose of this description, the bearings are referenced to the north line of the Northwest Quarter of Section 18, Township 3 South, Range 72 West of the 6th P.M. assumed to bear North 89°07'56" West, 3189.57 feet. Monumented by a 3-1/4" aluminum cap stamped BLM 1979 at Northeast Corner of said Section 18 and by 3-1/4" aluminum cap stamped BLM 1979 at the North Quarter Corner of said Section 18.

Beginning at a point on the southwesterly line of the 50'X50' Lease Area, whence the North Quarter Corner of Section 18, Township 3 South, Range 72 West of the 6th P.M. bears North 18°27'08" East, a distance of 1274.39 feet;

THENCE North 45°00'00" West, a distance of 10.00 feet;
THENCE North 45°00'00" East, a distance of 50.00 feet;
THENCE South 45°00'00" East, a distance of 50.00 feet;
THENCE South 45°00'00" West, a distance of 50.00 feet;
THENCE North 45°00'00" West, a distance of 40.00 feet to the Point of Beginning.

Containing 2500 Square Feet, or 0.057 Acres, more or less.

20' WIDE ACCESS AND UTILITY EASEMENT:

A 20' wide strip of land over and across Lot 2 Block 1 and Tract A, Miners Mesa Subdivision Filing No. 4 as described at Reception No. 147815 of the Public Records of Gilpin County (Parent Tract), located in the North Half of Section 18, Township 3 South, Range 72 West of the 6th Principal Meridian, City of Black Hawk, County of Gilpin, State of Colorado, said 20' wide strip being 10.00 feet on both sides of the following described centerline:

For the purpose of this description, the bearings are referenced to the north line of the Northwest Quarter of Section 18, Township 3 South, Range 72 West of the 6th P.M. assumed to bear North 89°07'56" West, 3189.57 feet. Monumented by a 3-1/4" aluminum cap stamped BLM 1979 at North Quarter Corner of said Section 18 and by 3-1/4" aluminum cap stamped BLM 1979 at the Northwest Corner of said Section 18.

Beginning at a point on the southwesterly line of the hereinafter described 50'X50' Lease Area, whence the North Quarter Corner of Section 18, Township 3 South, Range 72 West of the 6th P.M. bears North 18°27'08" East, a distance of 1274.39 feet, said point also being the Point of Beginning of said hereinafter described 50'X50' Lease Area;

THENCE South 45°00'00" West, a distance of 9.95 feet;
THENCE South 75°16'20" West, a distance of 22.13 feet;

THENCE North 84°12'08" West, a distance of 15.99 feet;
THENCE North 66°34'18" West, a distance of 19.91 feet;
THENCE North 14°17'41" West, a distance of 18.04 feet;
THENCE North 01°58'42" East, a distance of 51.97 feet;
THENCE North 05°47'09" West, a distance of 22.90 feet;
THENCE North 10°25'57" West, a distance of 59.76 feet;
THENCE North 08°48'23" West, a distance of 24.15 feet;
THENCE North 35°05'29" East, a distance of 147.81 feet to the north line of said Lot 2, Block 1, the south line of said Tract A, Miners Mesa Subdivision, Filing No. 4, whence the nearest property corner bears South 79°03'27" East, a distance of 1.60 feet;
THENCE along a curve to the right, an arc length of 83.79 feet, said curve having a radius of 72.77 feet, a delta angle of 65°58'04", a chord bearing of North 68°04'31" East and a chord length of 79.23 feet;
THENCE South 78°56'27" East, a distance of 150.84 feet to the east line of said Tract A, Miners Mesa Subdivision, Filing No. 4, the west Right-of-Way line of Miners Mesa Road, and the Point of Terminus, whence the North Quarter Corner of said Section 18, Township 3 South, Range 72 West bears North 11°03'33" East, a distance of 932.88 feet.

Containing 12,547 Square Feet, or 0.288 Acres, more or less.

The sidelines of said easement to be lengthened or shortened to intersect the southwesterly line of the hereinafter described 50'X50' Lease Area and the east line of said Tract A.

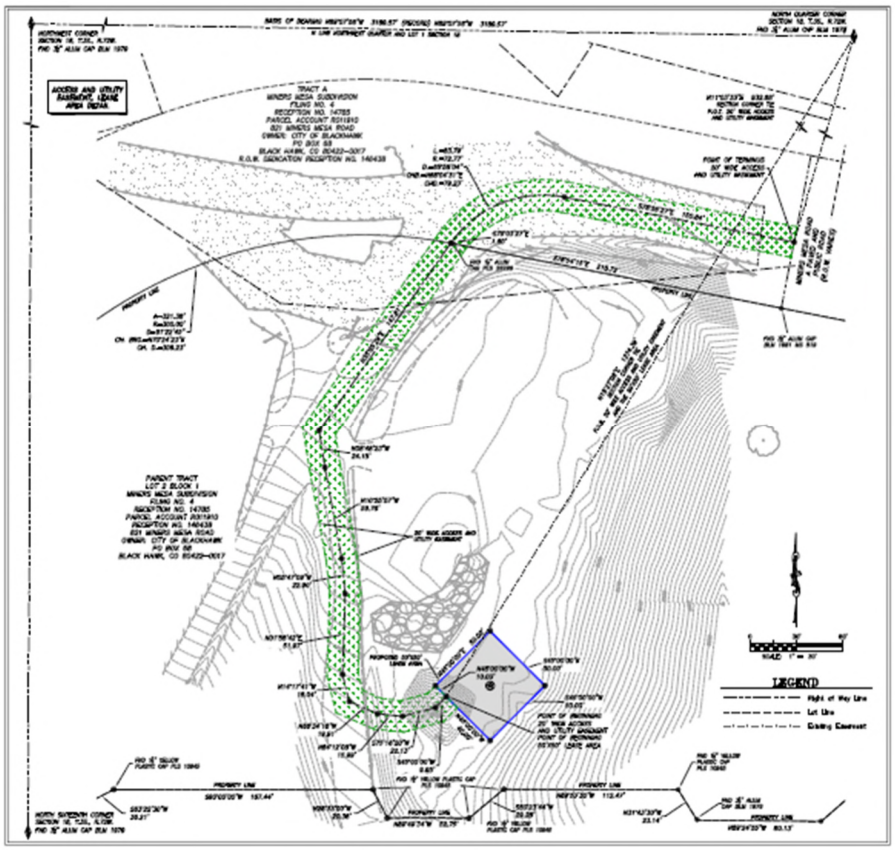

EXHIBIT 3

Memorandum of Option to Lease

(Intentionally Omitted)

EXHIBIT 4

Memorandum of Lease

(Attached)

(Above 3" Space for Recorder's Use Only)

Upon Recording Return to:
Vertical Bridge Development, LLC
750 Park of Commerce Drive, Suite 200
Boca Raton, FL 33487
Attn: Daniel Marinberg

Site Name: Blackhawk
Site Number: US-CO-5063

MEMORANDUM OF LEASE

This Memorandum of Lease ("**Memorandum**") evidences an Amended and Restated Lease Agreement (the "**Lease**") between City of Black Hawk, a Colorado municipal corporation (the "**Landlord**"), whose address is 201 Selak Street, Black Hawk, CO 80422, and Vertical Bridge Development, LLC, a Delaware limited liability company, whose mailing address is 750 Park of Commerce Drive, Suite 200, Boca Raton, FL 33487 ("**Tenant**"), dated _____, 20____ (the "**Effective Date**"), for a portion (the "**Premises**") of the real property (the "**Property**") described in Exhibit A attached hereto.

Landlord hereby ratifies, restates and confirms the Lease and leases to Tenant the Premises, subject to the terms and conditions of the Lease. The Commencement Date of the Lease is _____ _____. The Lease provides for the lease by the Landlord to Tenant of the Premises for an initial term of five (5) years with seven (7) renewal option(s) of an additional five (5) years each, and further provides:

1. Landlord will attorn to any mortgagee of Tenant and will subordinate any Landlord's lien to the liens of Tenant's mortgagees;

2. The Lease restricts Landlord's ability to utilize, or allow the utilization of the Property or real property owned by Landlord which is adjacent or contiguous to the Property for the construction, operation and/or maintenance of communications towers and related facilities;

3. Tenant (and persons deriving rights by, through, or under Tenant) are the sole parties to market, use, or sublease any portion of the Property for wireless communications or broadcast facilities during the term of the Lease (such restriction shall run with the land and be binding on the successors and assigns of Landlord);

4. The Premises may be used exclusively by Tenant for all legal purposes, including without limitation, erecting, installing, operating and maintaining radio and communications towers, buildings, and equipment;

5. Tenant is entitled to sublease and/or sublicense the Premises, including any communications tower located thereon;

6. Under certain circumstances, Tenant has a right of first refusal to acquire the Premises from Landlord;

7. The Lease may be assigned only in its entirety and only to a purchaser of the fee interest of the Property;

8. Landlord may not subdivide the Property without Tenant's prior written consent; and

9. This Memorandum is not intended to amend or modify, and shall not be deemed or construed as amending or modifying, any of the terms, conditions or provisions of the Lease. In the event of a conflict between the provisions of this Memorandum and the provisions of the Lease, the provisions of the Lease shall control. The Lease shall be binding upon and inure to the benefit of the Landlord and Tenant and shall inure to the benefit of their respective heirs, successors, and assigns, subject to the provisions of the Lease.

[THE REMAINDER OF THIS PAGE IS INTENTIONALLY LEFT BLANK, SIGNATURES BEGIN ON NEXT PAGE]

IN WITNESS WHEREOF, the parties hereto have executed this MEMORANDUM OF LEASE as of the date last signed by a party hereto.

WITNESSES:

_____
Name:_____

_____
Name:_____

LANDLORD:

City of Black Hawk
a Colorado municipal corporation

By: _____
Name:_____
Title:_____
Date:_____

STATE OF _____

COUNTY OF _____

The foregoing instrument was acknowledged before me this _____, 20___ by _____ (name of officer or agent), _____ (title of officer or agent) of the City of Black Hawk, a Colorado municipal corporation, on behalf of the corporation.

_____
Notary Public

Printed Name:_____

My Commission Expires:

_____

[Tenant's Signature Page to Memorandum of Lease]

STATE OF FLORIDA

WITNESSES:

TENANT:

Vertical Bridge Development, LLC
a Delaware limited liability company

_____
Name:_____

_____
Name:_____

By: _____
Name:_____
Title:_____
Date:_____

COUNTY OF PALM BEACH

The foregoing instrument was acknowledged before me this _____, 20___ by _____ (name of officer or agent), _____ (title of officer or agent) of Vertical Bridge Development, LLC, a Delaware limited liability company, on behalf of the company.

_____
Notary Public

Printed Name:_____

My Commission Expires:

_____

EXHIBIT A
(TO MEMORANDUM OF LEASE)

The Property
(may be updated by Tenant upon receipt of final legal description from title)

50'x50' LEASE AREA LEGAL DESCRIPTION:

A parcel of land over and across Lot 2 Block 1, Miners Mesa Subdivision Filing No. 4 as described at Reception No. 147815 of the Public Records of Gilpin County (Parent Tract), located in the North Half of Section 18, Township 3 South, Range 72 West of the 6th Principal Meridian, City of Black Hawk, County of Gilpin, State of Colorado, said parcel being more particularly described as follows:

For the purpose of this description, the bearings are referenced to the north line of the Northwest Quarter of Section 18, Township 3 South, Range 72 West of the 6th P.M. assumed to bear North 89°07'56" West, 3189.57 feet. Monumented by a 3-1/4" aluminum cap stamped BLM 1979 at Northeast Corner of said Section 18 and by 3-1/4" aluminum cap stamped BLM 1979 at the North Quarter Corner of said Section 18.

Beginning at a point on the southwesterly line of the 50'X50' Lease Area, whence the North Quarter Corner of Section 18, Township 3 South, Range 72 West of the 6th P.M. bears North 18°27'08" East, a distance of 1274.39 feet;

THENCE North 45°00'00" West, a distance of 10.00 feet;
THENCE North 45°00'00" East, a distance of 50.00 feet;
THENCE South 45°00'00" East, a distance of 50.00 feet;
THENCE South 45°00'00" West, a distance of 50.00 feet;
THENCE North 45°00'00" West, a distance of 40.00 feet to the Point of Beginning.

Containing 2500 Square Feet, or 0.057 Acres, more or less.

20' WIDE ACCESS AND UTILITY EASEMENT:

A 20' wide strip of land over and across Lot 2 Block 1 and Tract A, Miners Mesa Subdivision Filing No. 4 as described at Reception No. 147815 of the Public Records of Gilpin County (Parent Tract), located in the North Half of Section 18, Township 3 South, Range 72 West of the 6th Principal Meridian, City of Black Hawk, County of Gilpin, State of Colorado, said 20' wide strip being 10.00 feet on both sides of the following described centerline:

For the purpose of this description, the bearings are referenced to the north line of the Northwest Quarter of Section 18, Township 3 South, Range 72 West of the 6th P.M. assumed to bear North 89°07'56" West, 3189.57 feet. Monumented by a 3-1/4" aluminum cap stamped BLM 1979 at North Quarter Corner of said Section 18 and by 3-1/4" aluminum cap stamped BLM 1979 at the Northwest Corner of said Section 18.

Beginning at a point on the southwesterly line of the hereinafter described 50'X50' Lease Area, whence the North Quarter Corner of Section 18, Township 3 South, Range 72 West of the 6th P.M. bears North 18°27'08" East, a distance of 1274.39 feet, said point also being the Point of Beginning of said hereinafter described 50'X50' Lease Area;

THENCE South 45°00'00" West, a distance of 9.95 feet;

THENCE South 75°16'20" West, a distance of 22.13 feet;
THENCE North 84°12'08" West, a distance of 15.99 feet;
THENCE North 66°34'18" West, a distance of 19.91 feet;
THENCE North 14°17'41" West, a distance of 18.04 feet;
THENCE North 01°58'42" East, a distance of 51.97 feet;
THENCE North 05°47'09" West, a distance of 22.90 feet;
THENCE North 10°25'57" West, a distance of 59.76 feet;
THENCE North 08°48'23" West, a distance of 24.15 feet;
THENCE North 35°05'29" East, a distance of 147.81 feet to the north line of said Lot 2, Block 1, the south line of said Tract A, Miners Mesa Subdivision, Filing No. 4, whence the nearest property corner bears South 79°03'27" East, a distance of 1.60 feet;
THENCE along a curve to the right, an arc length of 83.79 feet, said curve having a radius of 72.77 feet, a delta angle of 65°58'04", a chord bearing of North 68°04'31" East and a chord length of 79.23 feet;
THENCE South 78°56'27" East, a distance of 150.84 feet to the east line of said Tract A, Miners Mesa Subdivision, Filing No. 4, the west Right-of-Way line of Miners Mesa Road, and the Point of Terminus, whence the North Quarter Corner of said Section 18, Township 3 South, Range 72 West bears North 11°03'33" East, a distance of 932.88 feet.

Containing 12547 Square Feet, or 0.288 Acres, more or less.

The sidelines of said easement to be lengthened or shortened to intersect the southwesterly line of the hereinafter described 50'X50' Lease Area and the east line of said Tract A.

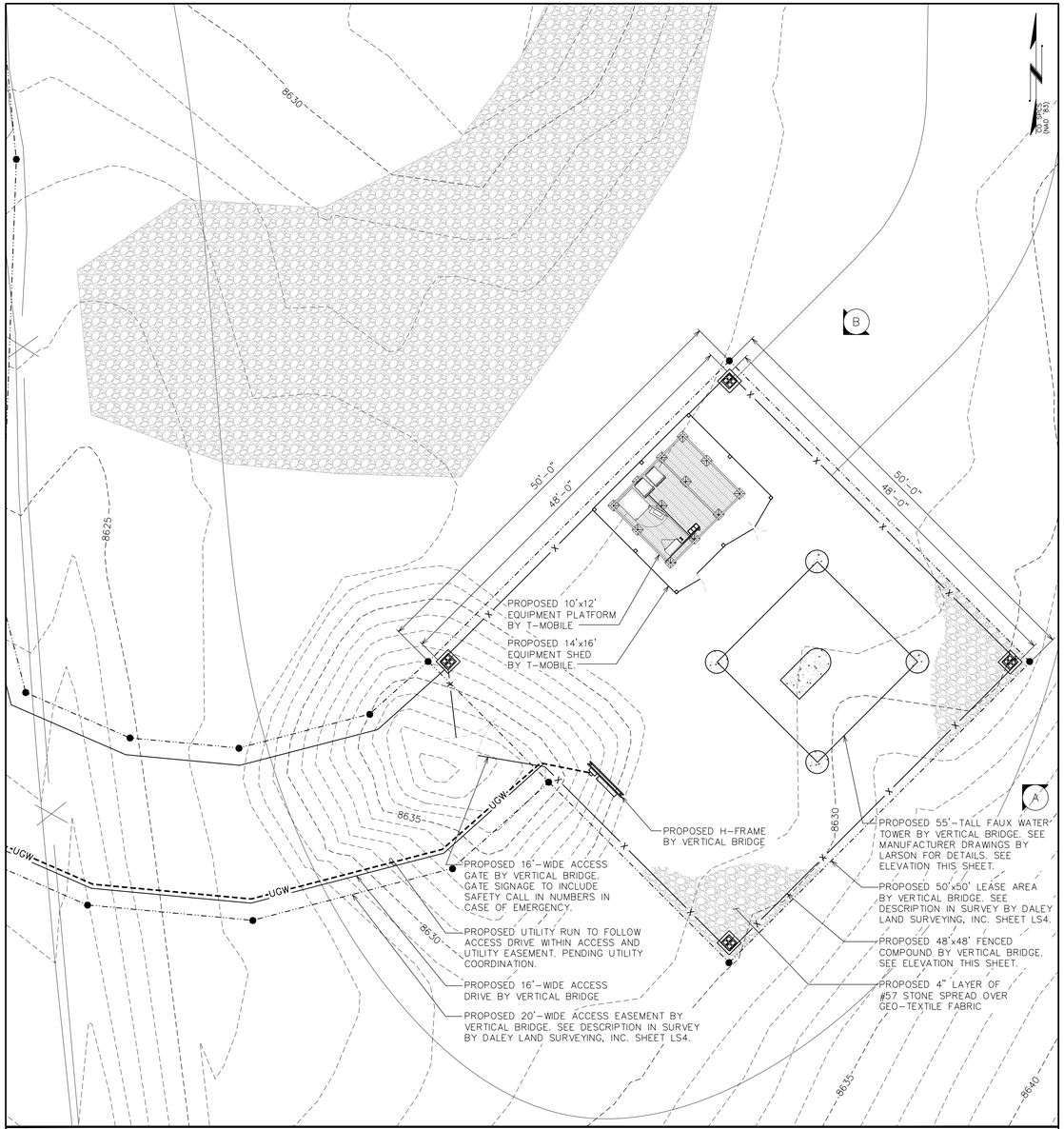

COMPOUND LAYOUT

SCALE: 1/8" = 1'-0"

0 8 16
SCALE IN FEET

NOTES:

1. TOWER TO BE LIT ONLY IF REQUIRED BY THE FAA.
2. TOWER TO BE PAINTED A NEUTRAL BEIGE/BROWN COLOR THAT IS COMPATIBLE WITH THE SURROUNDING ENVIRONMENT. (3)
3. PROPOSED CABLES MOUNTED TO WAVEGUIDE LADDER (PROVIDED BY TOWER MANUFACTURER)
4. TOWER TO INCLUDE SAFETY CABLE. DO NOT INCLUDE SAFETY CLIMB MECHANISM.
5. ANTI-CLIMB PANEL TO BE INSTALLED AT BASE OF TOWER LADDER.

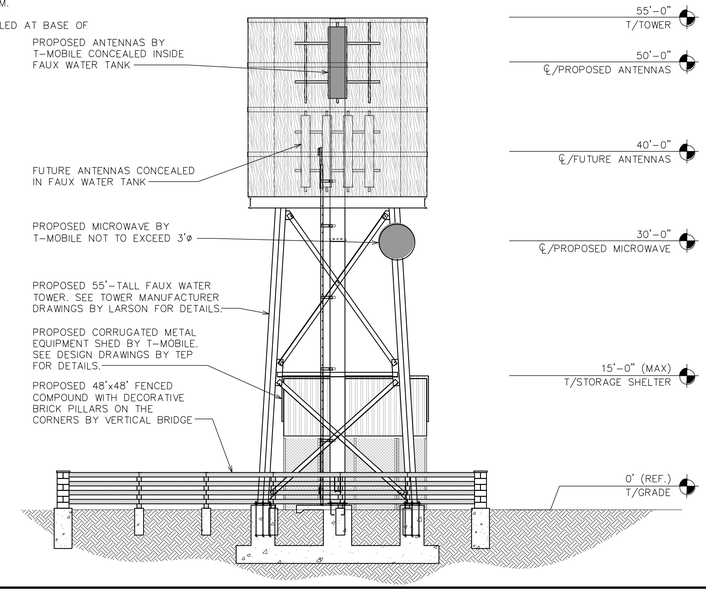

SITE ELEVATION (A)

SCALE: 1/8" = 1'-0"

0 8 16
SCALE IN FEET

SAMPLE MATERIAL PHOTOS

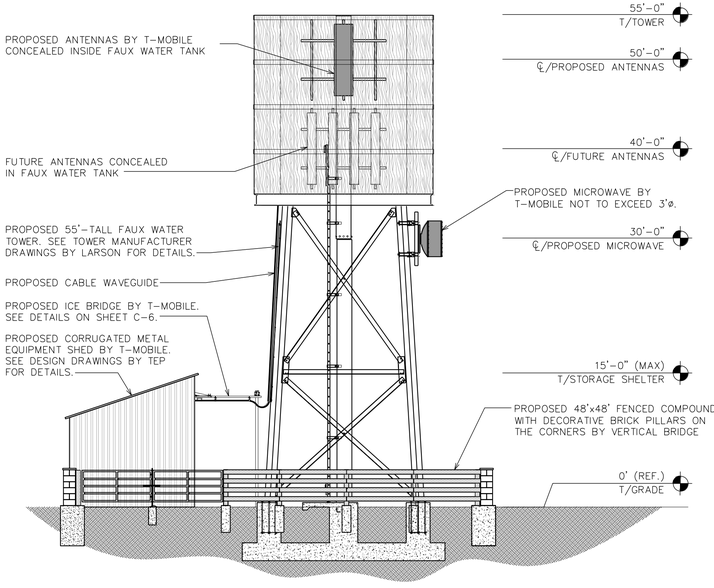

SITE ELEVATION (B)

SCALE: 1/8" = 1'-0"

0 40 80
SCALE IN FEET

PLANS PREPARED FOR:
vertical bridge
VERTICAL BRIDGE HOLDINGS, LLC
750 PARK OF COMMERCE DRIVE, SUITE 200
BOCA RATON, FL 33487

PLANS PREPARED BY:
TOWER ENGINEERING PROFESSIONALS
500 E 84TH AVENUE SUITE C10
THORNTON, CO 80229
OFFICE: (303) 566-9914

REV	DATE	DRAWN BY: KES
4	11-03-20	LEASE EXHIBIT
3	04-29-20	LEASE EXHIBIT
2	02-18-20	LEASE EXHIBIT
1	01-14-20	LEASE EXHIBIT
0	01-03-20	ISSUED FOR:

CHECKED BY: ARB

PROJECT INFORMATION:
US-CO-5063
BLACK HAWK
821 MINERS MESA ROAD
BLACK HAWK, CO 80427
(GILPIN COUNTY)

SEAL:
PRELIMINARY
DO NOT USE FOR CONSTRUCTION

REVISION: 4

SHEET TITLE:
SITE PLAN & ELEVATIONS

SHEET NUMBER:
L-E

TEP #: 73606.59357

CITY OF BLACK HAWK
REQUEST FOR COUNCIL ACTION

SUBJECT: To consider an Ordinance to approve a Lease Agreement Amendment to the original Lease Agreement with Vertical Bridge Development, LLC (Ordinance No. 2019-6, January 23, 2019) to allow a cell tower on City owned property on Miners Mesa. Recently City Council approved the COAC for the 55 foot tall tower which will look similar to an elevated water barrel on a four legged structure/tower.

RECOMMENDATION: Staff recommends the following motion to the Mayor and Board of Aldermen:

MOTION TO APPROVE CB3 - Ordinance No, 2021- 3, an Ordinance to accept an Amended and Restated Lease Agreement with revised legal descriptions to be placed in new Exhibits 1 and 2 of the Lease Agreement.

SUMMARY AND BACKGROUND OF SUBJECT MATTER:
The City of Black Hawk has coordinated with Vertical Bridge LLC to accommodate the original location of the 50 foot by 50 foot lease area for the faux water barrel tower for cell providers and provide a revised access route to the tower lease area to better allow the City more access to its own property. The original Agreement for the cell tower facility was approved by the Black Hawk City Council on January 23, 2019 by Ordinance No. 2019-6.

AGENDA DATE: January 13, 2021

FUNDING SOURCE: N/A

DEPARTMENT DIRECTOR APPROVAL: [X]Yes [ ]No

STAFF PERSON RESPONSIBLE: Cynthia L. Linker, CP&D Director

DOCUMENTS ATTACHED:
1. CB3 - Ordinance 2021-3
2. Amended and Restated Option & Lease Agreement
3. Revised Site Plan for Lease area and COAC tower approval

RECORD: [X]Yes [ ]No

CITY ATTORNEY REVIEW: [X]Yes [ ]N/A

BLACK HAWK ®

SUBMITTED BY:

Cynthia L. Linker, CP&D Director

Vincent Harris, AICP, Baseline Corporation

REVIEWED BY:

Stephen N. Cole, City Manager

RESOLUTION 1-2021

A RESOLUTION APPROVING A VARIANCE TO ALLOW A LOT SIZE OF 2.94 ACRES AND A LOT DEPTH OF BETWEEN 100 AND 200 FEET FOR THE PROPOSED LOT 1 OF THE GOLDEN GILPIN MILL SITE MINOR SUBDIVISION

RESOLUTION 70-2020

A RESOLUTION CONDITIONALLY APPROVING THE GOLDEN GILPIN MILL SITE MINOR SUBDIVISION

STATE OF COLORADO
COUNTY OF GILPIN
CITY OF BLACK HAWK

Resolution No. 1-2021

TITLE: A RESOLUTION APPROVING A VARIANCE TO ALLOW A LOT SIZE OF 2.94 ACRES AND A LOT DEPTH OF BETWEEN 100 AND 200 FEET FOR THE PROPOSED LOT 1 OF THE GOLDEN GILPIN MILL SITE MINOR SUBDIVISION

NOW, THEREFORE, BE IT RESOLVED BY THE CITY COUNCIL OF THE CITY OF BLACK HAWK, COLORADO, THAT:

Section 1. Findings of Fact.

A. An application has been made by Black Fox Mining on behalf of the property owner George E. Otten Jr. (the "Applicant") for a variance to allow a lot size of 2.94 acres and a lot depth of between 100 and 200 feet for the proposed Lot 1 of the Golden Gilpin Mill Site Minor Subdivision (the "Property"), within the City of Black Hawk, Colorado.

B. Notice of such proposed hearing was posted on the Property for fifteen (15) consecutive days prior to said hearing; and

C. The application is being evaluated in accordance with the criteria set forth in Section 16-366(2) of the Black Hawk Municipal Code.

Section 2. The City Council hereby determines to APPROVE the variance to allow a lot size of 2.94 acres and a lot depth of between 100 and 200 feet for the proposed Lot 1 of the Golden Gilpin Mill Site Minor Subdivision, based on the Applicant's satisfaction of all the necessary criteria set forth in Section 16-366(4) for such a variance as follows:

A. Due to exceptional and extraordinary circumstances unique to the property or structure for which the variance is sought, the strict enforcement of the provisions of this Chapter would cause an unnecessary hardship to the Applicant; specifically, the Property has been in its current configuration for decades, and it cannot be reconfigured to meet the minimum lot depth or lot area;

B. The circumstances causing the unnecessary hardship were not created by an owner or user of the property or by the Applicant for the variance because the Property has been in its current configuration for decades, and it cannot be reconfigured to meet the minimum lot depth or lot area;

C. The hardship is not established on the basis of lack of knowledge of the restrictions upon constructing or altering a structure; nor by the purchasing of a property without knowledge of applicable restrictions; nor by showing that greater profit would result if the variance were granted;

D. The circumstances causing the unnecessary hardship are particular to the land or structure for which the variance is sought and do not apply generally to land and buildings in the zoning district in which the Property is located because the Property's configuration is unique to this parcel;

E. The variance requested is the minimum deviation from this Chapter necessary to allow the same and no greater use as that allowed of other land or structures in the same zoning district;

F. The granting of the variance will not injure the appropriate use of adjacent conforming properties, will not impair an adequate supply of light and air, will not impair the view from adjacent property and will not substantially diminish or impair property values within the surrounding area;

G. The granting of the variance will be consistent with the spirit, purpose and intent of this Chapter and will not create a situation which alters the character of the area surrounding the property for which the variance is granted because the variance will allow the historical mill use to continue on a legally approved parcel of land – a new LOT 1 of the GOLDEN GILPIN MILL SITE MINOR SUBDIVISION.

H. The granting of the variance will secure and in no way diminish the public safety and welfare, nor impair prevention of or increase risk of fire, flood, traffic congestion or other hazard;

I. The granting of the variance is necessary to cause substantial justice to be done; and

J. The granting of the variance will not allow uses or densities not permitted in the zoning district in which it is granted, nor allow the expansion or establishment of a nonconforming use. More specifically, a Special Review Use (SRU) was approved that allows the historical use that was on the property to start up again and provide a new mill operation to begin on the property once a Site Development Plan is approved for the SRU MILL Use

RESOLVED AND PASSED this 13th day of January, 2021.

_____
David D. Spellman, Mayor

ATTEST:

_____
Melissa A. Greiner, CMC, City Clerk

STATE OF COLORADO
COUNTY OF GILPIN
CITY OF BLACK HAWK

Resolution No. 70-2020

TITLE: A RESOLUTION CONDITIONALLY APPROVING THE GOLDEN GILPIN MILL SITE MINOR SUBDIVISION

NOW, THEREFORE, BE IT RESOLVED BY THE CITY COUNCIL OF THE CITY OF BLACK HAWK, COLORADO, THAT:

Section 1. Findings of Fact.

A. An application has been made by Black Fox Mining on behalf of the property owner George E. Otten Jr. (the "Applicant") for approval of a minor subdivision to be known as the Golden Gilpin Mill Site Minor Subdivision (the "Property"), within the City of Black Hawk, Colorado; and

B. Notice of such proposed hearing was posted on the Property for fifteen (15) consecutive days prior to said hearing.

Section 2. The City Council hereby determines to conditionally approve the Golden Gilpin Mill Site Minor Subdivision, subject to satisfaction of the following conditions:

A. The plat shall not be effective until it is certified by the appropriate parties and recorded at the Office of the Gilpin County Clerk and Recorder; and

B. Applicant must comply with any conditions set forth by the Colorado Department of Transportation (CDOT) and the City of Black Hawk related to the issuance of a new State Highway Access Permit.

C. The following Plat Note shall be added to the plat mylar before signatures and recordation of said plat.

Plat note: 11. Future development of this property, shown as Lot 1, is subject to the requirements of the City of Black Hawk Zoning Ordinance (Chapter 16 of the Municipal Code) requiring a Site Development Plan; as well as the Black Hawk Central City Sanitation District (BHCCSD) rules and regulations and additional requirements regarding timing and construction of a sanitary sewer line extension and connection at the Highway 119 right of way to the east and north of Lot 1. The future needed Site Development Plan (SDP) application to the City shall include a signed AGREEMENT between the Lot 1 property owner and the BHCCSD concerning the Sanitary Sewer line construction and any allowed temporary facilities. Regardless, construction of a sanitary sewer line and connection will be required of the Lot 1 Owner by January 1, 2027 unless otherwise agreed with the BHCCSD.

RESOLVED AND PASSED this 13th day of January, 2021.

_____
David D. Spellman, Mayor

ATTEST:

_____
Melissa A. Greiner, CMC, City Clerk

NOTICE OF PUBLIC HEARING

Notice is hereby given that the City of Black Hawk Board of Aldermen shall hold a public hearing concerning a request for a Variance to lot size and width in the Environmental Character Preservation zone district on property described in Exhibit A and generally located at 7593 State Highway 119, Black Hawk, Colorado, pursuant to the City of Black Hawk zoning ordinance.

The public hearing is to be held before the City of Black Hawk Board of Aldermen on Wednesday, January 13, 2021, at 3:00 p.m. or as soon as possible thereafter. The City of Black Hawk is hosting virtual City Council meetings via Zoom in response to the Coronavirus COVID-19 until further notice. There are no physical meetings at this time. This meeting will accommodate public engagement via a Zoom URL and/or phone number to join. Please go to the City of Black Hawk's website for further instructions prior to the meeting.

ALL INTERESTED PARTIES MAY ATTEND

Melissa A. Greiner, CMC
City Clerk

EXHIBIT A

MILL SITE #10 EXCEPT ANY PORTION LYING WITHIN HIGHWAY NO. 119, AND MILL SITE #11 EXCEPT ANY PORTION LYING WITHIN HIGHWAY NO. 119 AND EXCEPT THE EASTERLY 70 FEET THEREOF, CITY OF BLACK HAWK, COUNTY OF GILPIN, STATE OF COLORADO.

NOTICE OF PUBLIC HEARING

Notice is hereby given that the City of Black Hawk Board of Aldermen shall hold a public hearing concerning a request for a Minor Subdivision to combine two lots on property described in Exhibit A and generally located at 7593 State Highway 119, Black Hawk, Colorado, pursuant to the City of Black Hawk zoning ordinance.

The public hearing is to be held before the City of Black Hawk Board of Aldermen on Wednesday, December 9, 2020, at 3:00 p.m. or as soon as possible thereafter. The City of Black Hawk is hosting virtual City Council meetings via Zoom in response to the Coronavirus COVID-19 until further notice. There are no physical meetings at this time. This meeting will accommodate public engagement via a Zoom URL and/or phone number to join. Please go to the City of Black Hawk's website for further instructions prior to the meeting.

ALL INTERESTED PARTIES MAY ATTEND

Melissa A. Greiner, CMC
City Clerk

EXHIBIT A

MILL SITE #10 EXCEPT ANY PORTION LYING WITHIN HIGHWAY NO. 119, AND MILL SITE #11 EXCEPT ANY PORTION LYING WITHIN HIGHWAY NO. 119 AND EXCEPT THE EASTERLY 70 FEET THEREOF, CITY OF BLACK HAWK, COUNTY OF GILPIN, STATE OF COLORADO.

CITY OF BLACK HAWK
REQUEST FOR COUNCIL ACTION

January 12, 2021 AMENDED VERSION – with new Condition No. 3 below

SUBJECT: Variance to the minimum lot size and lot width within the Environmental Character Preservation (ECP) zone district and a minor subdivision for the Golden Gilpin Mill.

RECOMMENDATION: Staff recommends the following motion to the Mayor and Board of Aldermen, as well as the Board of Appeals (for the requested Variance):

MOTION TO APPROVE Resolution No. 1-2021, a Resolution approving a Variance to allow a lot size of 2.94 acres and a lot depth of between 200 and 100 feet for the proposed Lot 1 of The Golden Gilpin Mill Site Minor Subdivision.

and

MOTION TO APPROVE WITH CONDITIONS Resolution No. 70-2020, a Resolution approving the Minor Subdivision plat titled "The Golden Gilpin Mill Site Minor Subdivision" with the following conditions:

1. The plat shall not be effective until it is certified by the appropriate parties and recorded at the Office of the Gilpin County Clerk and Recorder; and
2. The applicant is reminded of the following comments from the Colorado Department of Transportation (CDOT) that are to be addressed by the applicant with the next phase of development approval required in the Black Hawk Zoning Ordinance including the Site Development Plan (SDP) process prior to the milling use commencing on the subject property:

   CDOT has no objections to the consolidation of Millsite #10 and Millsite #11 into one lot for the purpose of developing the property. However, we do offer the following comments related to the access to State Highway 119:

   - The State Highway Access Code identifies three situations in which a new State Highway Access Permit must be issued. The situations are as follows: 1.) There is an increase in vehicle use of an existing access greater than or equal to 20%. 2.) There is a change in use of an existing access. 3.) The access owner makes an improvement to an existing access. Due to the increase in use of the access and possibly modifications to the existing access a new State Highway Access permit will be required. The application for the access permit can be found at the following link: https://www.codot.gov/business/permits/accesspermits/forms
   - Requirements of the Access Permit are listed in #18 on the application form. A Traffic Study may be required along with the application. If the developer/applicant would like to discuss the Access Permit Application requirements and process please contact Marilyn Cross.
     Marilyn Cross, Access Manager, marilyn.cross@state.co.us, Phone 303.512.4266, Cell 303.514.5992
   - Any grading/development adjacent to State Highway 91 will require CDOT's review of a grading/drainage plan to make sure the Highway is not adversely affected.
   - Any proposed construction (not related to the access), utility, survey, or landscaping work within CDOT right-of-way will require a Special Use or Utility Permit issued by the Department. These online permit applications can be found at the following link:
     https://www.codot.gov/business/permits/utilitiesspecialuse/online-permit-application

3. The following Plat Note shall be added to the plat mylar before signatures and recordation of said plat.

Plat Note - 11: Future development of this property, shown as Lot 1, is subject to the requirements of the City of Black Hawk Zoning Ordinance (Chapter 16 of the Municipal Code) requiring a Site Development Plan; as well as the Black Hawk Central City Sanitation District (BHCCSD) rules and regulations and additional requirements regarding timing and construction of a sanitary sewer line extension and connection at the Highway 119 right of way to the east and north of Lot 1. The future needed Site Development Plan (SDP) application to the City shall include a signed AGREEMENT between the Lot 1 property owner and the BHCCSD concerning the Sanitary Sewer line construction and any allowed temporary facilities. Regardless, construction of a sanitary sewer line and connection will be required of the Lot 1 Owner by January 1, 2027 unless otherwise agreed with the BHCCSD.

SUMMARY AND BACKGROUND OF SUBJECT MATTER:

The City of Black Hawk has received an application from Matt Collins representing the property owner, George E. Otten Jr. Trust, requesting a variance to lot size and lot width in the ECP zone district and approval of a minor subdivision that joins Millsite #10 and Millsite #11 into one lot. The request follows previous approval of a Special Review Use permit that allowed milling operations and limited tourism. The minor subdivision is required prior to the proposed improvements to the site that will enable re-operation of the existing mill, once a Site Development Plan (SDP) is reviewed and approved for the property . Refer to the Staff Report included with this Request for Council Action.

AGENDA DATE:	January 13, 2020
WORKSHOP DATE:	N/A
FUNDING SOURCE:	N/A
DEPARTMENT DIRECTOR APPROVAL:	[X]Yes [ ]No
STAFF PERSON RESPONSIBLE:	Cynthia L. Linker CP&D Director
DOCUMENTS ATTACHED:	Resolution 1-2021 Resolution 70-2020 Staff Report
RECORD:	[X]Yes [ ]No
CITY ATTORNEY REVIEW:	[ ]Yes [X]N/A

SUBMITTED BY:

Cynthia L. Linker, CP&D Director

REVIEWED BY:

Stephen N. Cole, City Manager

Vincent Harris, AICP, Baseline Corporation

BLACK HAWK ®

Staff Report

CITY OF BLACK HAWK
PLANNING / LAND USE

Date prepared: November 23, 2020
Original Meeting Date: December 9, 2020
Continued Meeting Date: January 13, 2021

STAFF REPORT:	**Minor Subdivision: Millsite #10 and Millsite #11**
For:	City Council
Project:	P-20-16 The Golden Gilpin Mill Site Minor Subdivision
Property Address:	7593 State Highway 119, Black Hawk, CO 80422
Applicants:	Matt Collins, P.E. - Black Fox Mining
	Mike Meter, Mill Manager - Golden Gilpin Mill
Zoning:	Environmental Character Preservation (ECP)
Prepared by:	Julie Esterl - Baseline Corporation
Approved by:	Vincent Harris, AICP - Baseline Corporation
Reviewed by:	Cynthia Linker, CP&D Director

BACKGROUND:

On July 29, 2020 the City of Black Hawk received an application request for a Minor Subdivision from Matt Collins, Black Fox Mining. The request involves the joining of two lots (Millsite #10 and Millsite #11) at 7593 Highway 119 in Black Hawk. Millsites #10 and #11 are owned by the George E. Otten Jr. Trust and are the location of the existing Golden Gilpin Mill. The applicant, Matt Collins, is authorized to represent the property owner and has been working with the owner since 2017 to re-open the mill for processing ore from the nearby Bates-Hunter Mine in Central City.

On June 12, 2019, by Resolution No. 35-2019, Mr. Collins was issued a Certificate of Architectural Compatibility (COAC) in order to begin roof repairs to the mill, and on June 10, 2020, by Resolution No. 45-2020, Mr. Collins was granted a Special Review Use (SRU) permit for the property that allows milling operation and limited tourism with a number of conditions. One of the conditions of approval requires the two Millsites to be joined into one lot prior to further improvements to the site.

The Minor Subdivision application was deemed complete with the payment of the fee deposit on August 11, 2020, and sent out on referral on August 13, 2020. First referral comments were forwarded to the applicant on September 3, 2020. Subsequent referrals 2 – 4 were coordinated between October 5, 2020 and November 12, 2020. Review of the Title Commitment submitted by the applicant indicated that the portion of Millsite #11 that is east of Highway 119 is excluded from ownership, and therefore has been excluded from the minor subdivision. Refer to Figure 1.

Figure 1: Location Map

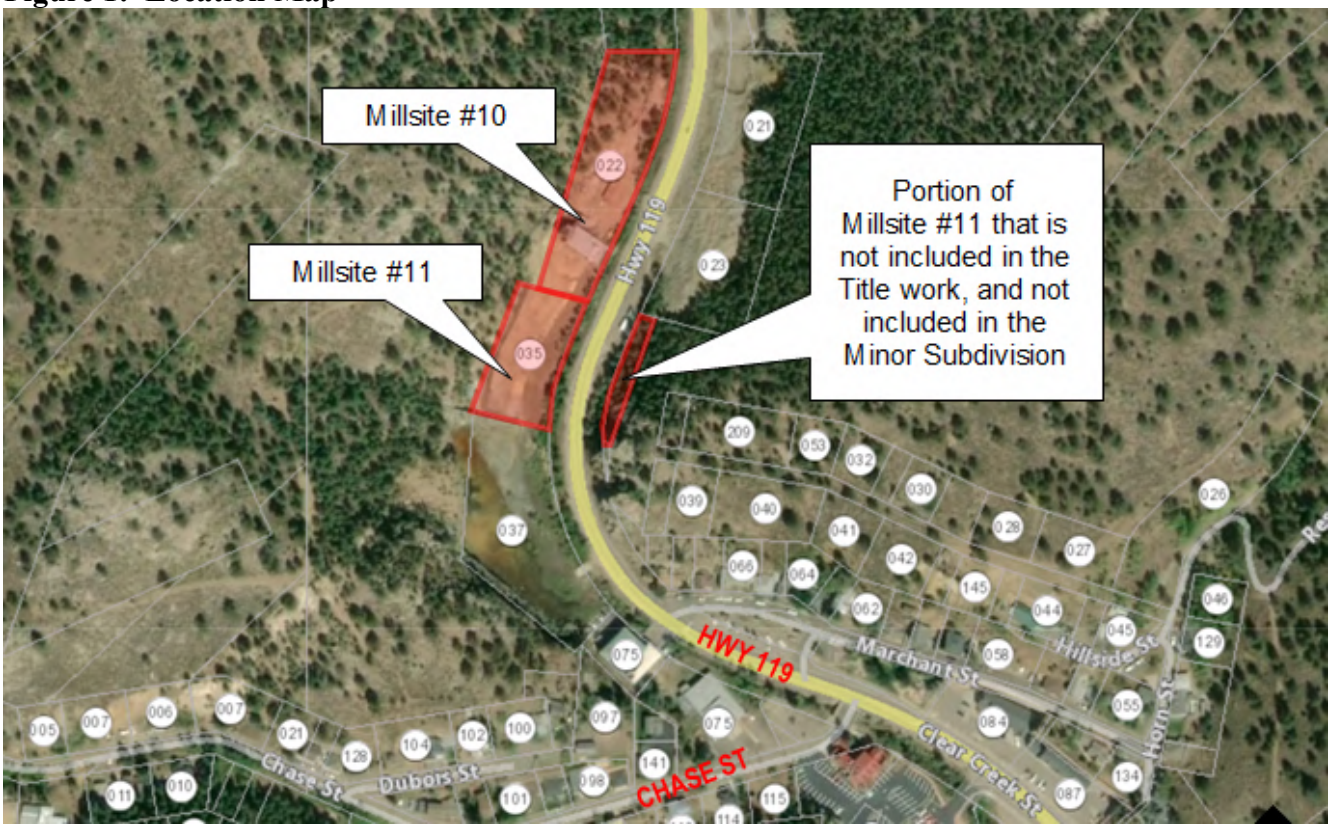

ZONING:

The Golden Gilpin Mill property currently consists of two parcels: Mill Site #10 (parcel number 1833-072-01-022) and Mill Site #11 (parcel number 1833-072-01-035). Both parcels are located in the Environmental Character Preservation (ECP) zone district and such ECP zoning was established by the City in the mid-1990's and attributed to this property at that time. As mentioned above, the property was granted a SRU for milling and limited tourism uses. Portions of both properties are also located within the FEMA 100 Year Flood Boundary which has been shown on the minor subdivision plat.

The minimum lot size in the ECP district is 5 acres, and the minimum lot depth is 200 feet. Because the proposed lot is 2.94 acres and is not 200 feet deep in most areas, a variance will be required prior to plat approval. The variance request is addressed at the end of this report. Refer to Figure 2.

Figure 2: Minor Subdivision

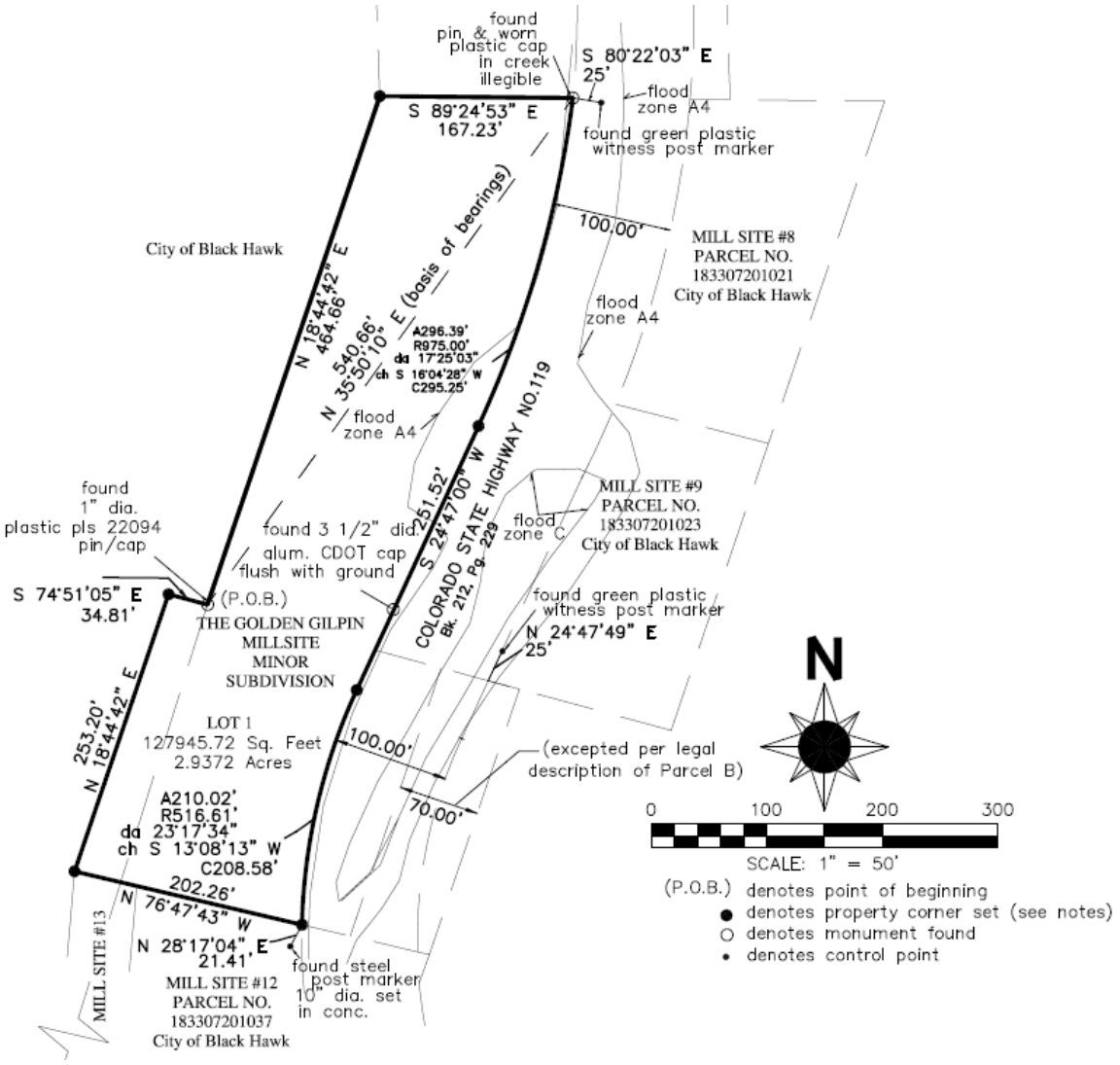

REQUEST:

Mr.Collins has been working with Palmer Engineering & Forensics, LLC and Timber Products Inspection, Inc. in order to determine the scope of work necessary to restore the building for re-use. Phase 1 of these efforts includes structural repairs and the replacement of the roof, which have been completed. The scope of Phase 2 will include further improvements to the building, the addition of required utilities, and the construction of additional structures including a thickener (clarifier) and a sand barn. The proposed sand barn is located across the property line between Mill Site #10 and Mill Site #11, which necessitates this minor subdivision to join these two lots. If this Minor Subdivision is approved, Site Development Plan (SDP) approval will then be required prior to construction of the proposed improvements in accordance with Sec. 16-362 of the Black Hawk Municipal Code. - Site development standards. Refer to Figure 3.

Figure 3: Conceptual Plan

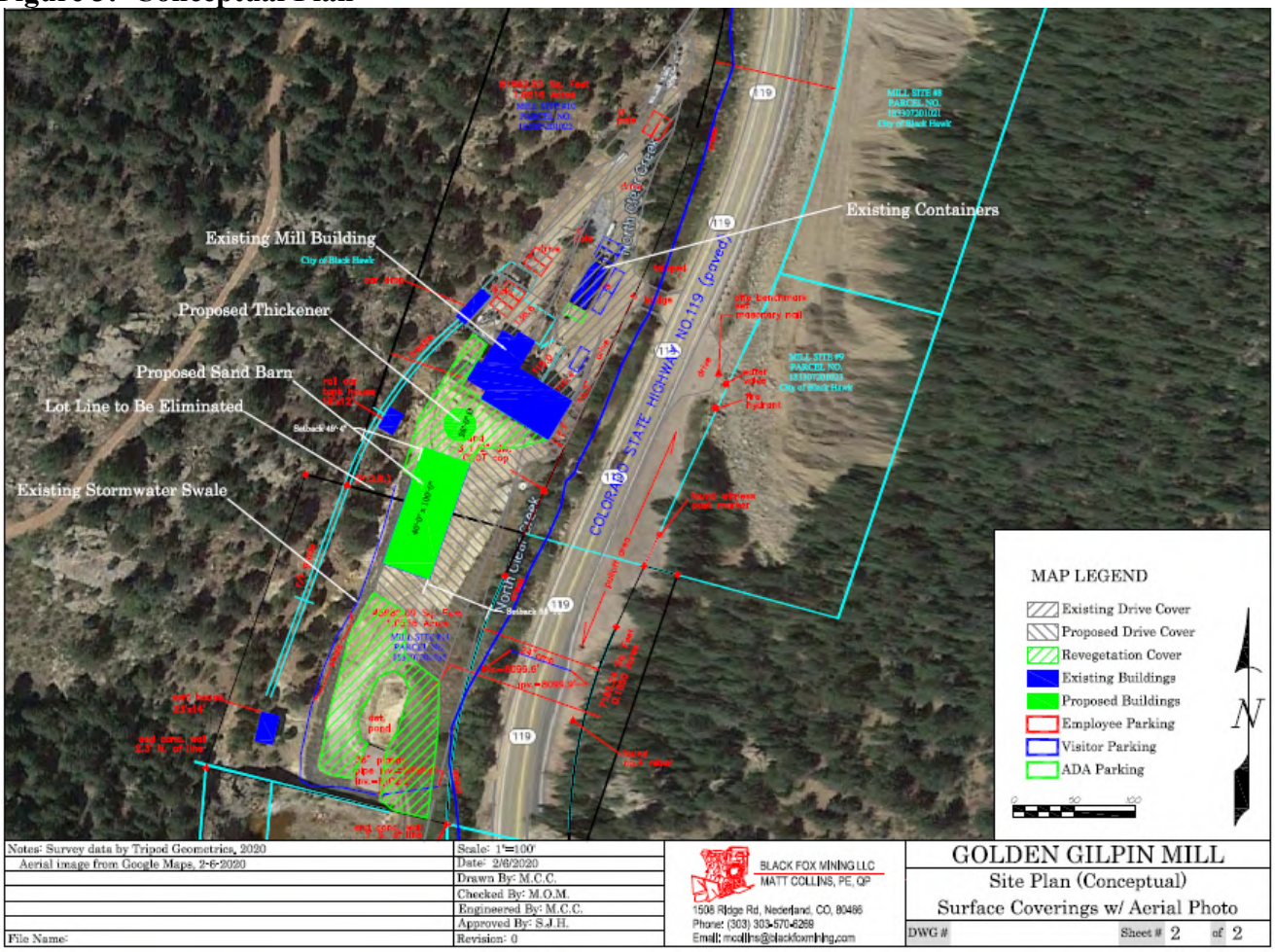

Applicable City of Black Hawk Regulations

Excerpts from:

City of Black Hawk
Municipal Code
Chapter 17 – Subdivisions

Sec. 17-42. Specific Definitions.

Subdivision, minor *means any subdivision containing not more than four (4) lots or dwelling units having access on an existing public street, not involving any new street or road or the extension of municipal facilities and not adversely affecting the development of the remainder of the parcel or adjoining property and not in conflict with any provision or portion of the Comprehensive Plan, official map or Chapter 16 of this Code, if such exists, or these regulations. […]*

Sec. 17-65. Minor Subdivision Plat.

(a) A minor subdivision plat allows for the subdivider an opportunity to shorten the time required for platting procedures described in this Chapter. The minor subdivision plat procedure is not intended to circumvent the other requirements found elsewhere in this Chapter. The provisions within this Section may only be applied when the following criteria are met:
(1) The division of land involves the creation of no more than four (4) lots.
(2) Each of the proposed lots created by this procedure has direct access to a public right-of-way. Access shall be a minimum driveway width of ten (10) feet except as required by other ordinances or design standards within the City.
(3) The subdivision of land does not involve the creation of a new right-of-way or an extension of an existing right-of-way intended for access to the proposed lots.
(b) The minor subdivision plat shall be processed in a manner similarly described by the final plat procedure contained within Subsection 17-64(b). There is no requirement for a sketch plan or preliminary plat procedure. The Planning Director may refer the minor subdivision plat to outside agencies for their review and comment. Agencies selected by the Planning Director for this review will have two (2) weeks to respond.
(c) The minor subdivision plat shall be prepared in a similar manner as the final plat described in Subsections 17-64(c) and (d). In addition to the submittal information required in this Section, the following shall also be provided by the applicant: [maps, etc.].

Staff Comment: The minor subdivision process is the appropriate process for this action as the proposed plat creates no more than four lots and no new right-of-way dedication. The minor subdivision has been prepared in a similar manner as a final plat and in accordance with the Municipal Code.

Sec. 17-64. Final Plat.

(b) The final plat shall be processed as follows:
(2) At a regular meeting, the Board of Aldermen shall review the final plat for conformity with the approved preliminary plat, the statement of requirements and other requirements of these regulations. The Board of Aldermen may refer the final plat to its staff for further review and verification. The Planning Director shall send final plats to public and private utility agencies for them to review utility easement locations. The Board of Aldermen shall endeavor to conclude its review prior to the expiration of thirty (30) days from submission of the final plat to itself as above provided.

Staff Comment: The application was sent to various internal and external referral agencies for review and comment. The following agencies responded with either "no comments" or that the proposal has no conflicts with their interests:

- Black Hawk/Central City Sanitation District
- Black Hawk Public Works Department
- Black Hawk PW/Water Department
- Black Hawk Fire Department
- Xcel Energy
- Century Link

The applicant addressed comments from Baseline and the survey consultant, Doug Lancaster. Notes from the Colorado Department of Transportation (CDOT) are included with the conditions of approval.

(3) The Board of Aldermen shall check the final plat, especially with regard to required improvements and the acceptance of areas dedicated for public use and shall approve or disapprove the final plat. At such meeting the subdivision agreement and all required financial guarantees for completion of the roads and other public improvements shall be provided by the subdivider.

Staff Comment: The minor subdivision does not propose any public improvements; therefore a subdivision agreement has not been prepared. Public Improvements and utility extensions that may be required will be addressed during the Site Plan Development review process.

City of Black Hawk
Municipal Code
Chapter 16 – Zoning

Division 3 - Environmental Character Preservation (ECP)
Sec. 16-77. - Dimensional regulations.

(a) Lot area and width requirements
(1) Minimum lot area: five (5) acres
(2) Minimum lot dimensions are:
a. Two hundred (200) feet deep.
b. Two hundred (200) feet wide.

Staff Comment: The minor subdivision will require a variance to lot area and lot depth. The review and recommendation of the variance is included with this report.

Sec. 16-366. Variances and appeals.
All appeals of decisions and requests for a variance shall be processed as described below.
(2) Variances.
Requests for relief from the regulations and development standards of this Chapter may be taken to the Board of Appeals when the strict application of this Chapter will deprive a property of the privileges enjoyed by other property of the same zoning classification in the same zoning district because of special circumstances applicable to a property, including its size, shape, topography, location or surrounding.

(4) Decision of the Board of Appeals.

a. After a public hearing, the Board of Appeals may modify the application of the regulations or provisions of this Chapter relating to the construction or alteration of buildings or structures or uses of land if the Board of Appeals finds that all of the following exist:

1. *Due to exceptional and extraordinary circumstances unique to the property or structure for which the variance is sought, the strict enforcement of the provisions of this Chapter would cause an unnecessary hardship to the applicant;*
   Staff Comment: This parcel has been in its current configuration for decades and prior to the ECP (Environmental Character Preservation) zoning placed on it in the 1990's by Black Hawk. It cannot be reconfigured to meet the minimum lot depth or lot area.

2. *The circumstances causing the unnecessary hardship were not created by an owner or user of the property or by the applicant for the variance;*
   Staff Comment: Again, This parcel has been in its current configuration for decades and prior to the ECP (Environmental Character Preservation) zoning placed on it in the 1990's by Black Hawk. It cannot be reconfigured to meet the minimum lot depth or lot area.

3. *The hardship is not established on the basis of lack of knowledge of the restrictions upon constructing or altering a structure; nor by the purchasing of a property without knowledge of applicable restrictions; nor by showing that greater profit would result if the variance were granted;*
   Staff Comment: This parcel shape and size has been in existence for decades and cannot change.

4. *The circumstances causing the unnecessary hardship are particular to the land or structure for which the variance is sought and do not apply generally to land and buildings in the zoning district in which the property is located;*
   Staff Comment: This parcel's configuration is solely subject to this land only and was zoned to the ECP zone district after the parcel was created.

5. *The variance requested is the minimum deviation from this Chapter necessary to allow the same and no greater use as that allowed of other land or structures in the same zoning district;*
   Staff Comment: The parcel cannot and will not change so therefor it is the minimum relief needed.

6. *The granting of the variance will not injure the appropriate use of adjacent conforming properties, will not impair an adequate supply of light and air, will not impair the view from adjacent property and will not substantially diminish or impair property values within the surrounding area;*
   Staff Comment: The variance will not injure, impair, or diminish the surrounding area.

7. *The granting of the variance will be consistent with the spirit, purpose and intent of this Chapter and will not create a situation which alters the character of the area surrounding the property for which the variance is granted;*
   Staff Comment: The variance will allow the historical mill use to continue on a legally approval parcel of Land – a new Lot 1 of the Golden Gilpin Mill Site Minor Subdivision.

8. *The granting of the variance will secure and in no way diminish the public safety and welfare; nor impair prevention of or increase risk of fire, flood, traffic congestion or other hazard;*
   Staff Comment: Public safety and welfare will not be diminished.

9. *The granting of the variance is necessary to cause substantial justice to be done; and*
   Staff Comment: Granting of the variance will allow substantial justice.

10. *The granting of the variance will not allow uses or densities not permitted in the zoning district in which it is granted nor allow the expansion or establishment of a nonconforming use.*
    Staff Comment: The granting of the variance does not allow a use that is not permitted or expansion of a non-conforming use. Recently a Special Review Use (SRU) was approved that allows the historical use that was on the property many decades ago to start up again and provide a new Mill operation to begin on the property once a Site Development Plan is approved for the SRU MILL Use

b. *In granting a variance, the Board of Appeals may prescribe any safeguard that it deems necessary to secure substantially the objectives of the regulations or provisions to which the variance applies and may impose such conditions on the use of the property for which the variance is sought as are consistent with the purposes of this Chapter. If such safeguards or conditions are imposed, the variance shall not become effective until the owner of the property and the applicant agree to abide by such conditions.*
   Staff Comment: Staff does not suggest any conditions of approval regarding the variance.

STAFF SUMMARY:

Staff from Baseline Corporation has evaluated the application for the minor subdivision submitted by Matt Collins, Black Fox Mining. The intent of the application is to consolidate two Millsites into one lot. The minor subdivision process is the appropriate process for this action as the proposed plat creates no more than four lots and no new right-of-way dedication.

The minor subdivision plat titled "The Golden Gilpin Mill Site Minor Subdivision" has been submitted and processed as required by Chapter 17 of the Municipal Code. The applicant has requested a variance to lot size and lot depth in the ECP zone district. The City of Black Hawk Municipal Code allows for variations to code regulations with the review and approval of the Board of Appeals. Staff from Baseline recommends that a variance to the lot area and lot width be granted. The proposed variation to the code is a reasonable request for a property that was established prior to the establishment of the ECP zone district. Granting this variance will not injure the land use or property values of adjacent properties, nor should the granting of the variance diminish public safety and welfare.

Staff recommends that the City Council approve a Variance to lot size and depth and conditionally approve the minor subdivision plat titled 'The Golden Gilpin Mill Site Minor Subdivision' subject to the following conditions:

1. The plat shall not be effective until it is certified by the appropriate parties and recorded at the Office of the Gilpin County Clerk and Recorder; and
2. The applicant is reminded of the following comments from the Colorado Department of Transportation (CDOT) that are to be addressed by the applicant with the next phase of development approval required in the Black Hawk Zoning Ordinance including the Site Development Plan (SDP) process prior to the milling use commencing on the subject property:

   CDOT has no objections to the consolidation of Millsite #10 and Millsite #11 into one lot for the purpose of developing the property. However, we do offer the following comments related to the access to State Highway 119:

   - The State Highway Access Code identifies three situations in which a new State Highway Access Permit must be issued. The situations are as follows: 1.) There is an increase in vehicle use of an existing access greater than or equal to 20%. 2.) There is a change in use of an existing access. 3.) The access owner makes an improvement to an existing access. Due to the increase in use of the access and possibly modifications to the existing access a new State Highway Access permit will be required. The application for the access permit can be found at the following link: https://www.codot.gov/business/permits/accesspermits/forms
   - Requirements of the Access Permit are listed in #18 on the application form. A Traffic Study may be required along with the application. If the developer/applicant would like to discuss the Access Permit Application requirements and process please contact Marilyn Cross.
     Marilyn Cross, Access Manager, marilyn.cross@state.co.us, Phone 303.512.4266, Cell 303.514.5992
   - Any grading/development adjacent to State Highway 91 will require CDOT's review of a grading/drainage plan to make sure the Highway is not adversely affected.
   - Any proposed construction (not related to the access), utility, survey, or landscaping work within CDOT right-of-way will require a Special Use or Utility Permit issued by the Department. These online permit applications can be found at the following link: https://www.codot.gov/business/permits/utilitiesspecialuse/online-permit-application

FINDINGS:

The Board of Appeals may *approve, conditionally approve, or deny* the requested **Variance**. To support this proposal, the following findings can be used:

The proposed lot area and lot width variance satisfies the criteria outlined in Section 16-366 of the Municipal Code as noted and evaluated in the staff report presented to the Board of Appeals.

The City Council may *approve, conditionally approve, or deny* a **Minor Subdivision** of land in the City of Black Hawk. To support this proposal, the following findings can be used:

1. *Application has been made by the property owner's representative, Matt Collins, Black Fox Mining, to create a new subdivision of certain property located at 7593 State Highway 119 (the "Property") within the City of Black Hawk, Colorado, to eliminate a common lot line.*
2. *The application meets the provisions of Chapter 17 of the Municipal Code (Subdivisions).*

RECOMMENDATION:

Staff recommends the following motions to the Board of Aldermen and the Board of Appeals (for the requested Variance):

MOTION TO APPROVE Resolution No. 1-2021, a Resolution approving a Variance to allow a lot size of 2.94 acres and a lot depth of between 200 and 100 feet for the proposed Lot 1 of The Golden Gilpin Mill Site Minor Subdivision.

Staff also recommends the following motion to the Mayor and City Council:

MOTION TO APPROVE WITH CONDITIONS Resolution No. 70-2020, a Resolution approving the Minor Subdivision plat titled "The Golden Gilpin Mill Site Minor Subdivision" with the following conditions:

1. The plat shall not be effective until it is certified by the appropriate parties and recorded at the Office of the Gilpin County Clerk and Recorder; and
2. The applicant is reminded of the following comments from the Colorado Department of Transportation (CDOT) that are to be addressed by the applicant with the next phase of development approval required in the Black Hawk Zoning Ordinance including the Site Development Plan (SDP) process prior to the milling use commencing on the subject property: CDOT has no objections to the consolidation of Millsite #10 and Millsite #11 into one lot for the purpose of developing the property. However, we do offer the following comments related to the access to State Highway 119:
   - The State Highway Access Code identifies three situations in which a new State Highway Access Permit must be issued. The situations are as follows: 1.) There is an increase in vehicle use of an existing access greater than or equal to 20%. 2.) There is a change in use of an existing access. 3.) The access owner makes an improvement to an existing access. Due to the increase in use of the access and possibly modifications to the existing access a new State Highway Access permit will be required. The application for the access permit can be found at the following link: https://www.codot.gov/business/permits/accesspermits/forms
   - Requirements of the Access Permit are listed in #18 on the application form. A Traffic Study may be required along with the application. If the developer/applicant would like to discuss the Access Permit Application requirements and process please contact Marilyn Cross.
     Marilyn Cross, Access Manager, marilyn.cross@state.co.us, Phone 303.512.4266, Cell 303.514.5992
   - Any grading/development adjacent to State Highway 91 will require CDOT's review of a grading/drainage plan to make sure the Highway is not adversely affected.
   - Any proposed construction (not related to the access), utility, survey, or landscaping work within CDOT right-of-way will require a Special Use or Utility Permit issued by the Department. These online permit applications can be found at the following link: https://www.codot.gov/business/permits/utilitiesspecialuse/online-permit-application

Attachments:

1. Combined Application including letter of Variance request
2. Minor Subdivision Plat titled ‘The Golden Gilpin Mill Site Minor Subdivision’

Applicant's Submittal

FORMAL LAND USE APPLICATION

City of Black Hawk
Community Planning and Development
211 Church Street, P.O. Box 68, Black Hawk, CO 80422
Phone: 303-582-0615 or www.cityofblackhawk.org

COMPLETE ALL BOXES – Incomplete applications will not be processed

Applicant Name: **Matt Collins, P.E.**	Applicant Address & Zip Code: **1508 Ridge Rd., Nederland, CO 80466**
Applicant Phone: **3035706269**	Applicant Email: **mcollins@blackfoxmining.com**
Property Owner Name: **George E. Otten, Jr. Estate**	Property Owner Address & Zip Code: **P.O. Box 2011, Farmington, NM 87499**
Property Owner Phone: **5053252104**	Property Owner Email: **dboford@msn.com**
Project Name: **Golden Gilpin Mill Minor Subdivision**	Project Description: **Lot Line Elimination**
Project Address or Location: **7593 Hwy 119, Black Hawk, CO 80422**	Project Parcel Number: **1833-072-01-022, 1833-072-01-035**
Existing Subdivision, Lot & Block: **n/a**	Existing Planned Unit Development: **n/a**
Existing Property Size: ☒ Acres ☐ Sq. Ft. **3.0122**	Existing Building Size in square feet: **3292**
Existing Zoning: **ECP**	Proposed Zoning: **ECP**
Existing Use: **Milling/Tourism**	Proposed Use: **Milling/Tourism**

ITEMS REQUIRED WITH FORMAL LAND USE APPLICATION SUBMITTAL:

- ☒ This completed & signed Formal Land Use Application form
- ☒ All Items indicated/checked on the Formal Land Use Application Checklist that is attached
- ☒ Formal Land Use Application Deposit in the amount of $ **3000**

APPLICATION AND FEE AGREEMENT:

The Black Hawk Adopted Fee Schedule and Section 16-370 of the Black Hawk Municipal Code establishes the requirement for applicants to pay fees to cover the costs the City may incur by having City approved consultants evaluate and process applications.

I, as the applicant, hereby certify that I believe to the best of my knowledge that all information supplied with this application is true and accurate and that consent of the property owner listed above, without which the requested action cannot lawfully be accomplished, has been granted. Permission is also hereby granted to the City of Black Hawk staff and their consultants to physically enter upon and inspect the subject property and take photographs as necessary for preparation of the case. In addition, by signing this application I am agreeing that I am authorized to sign on behalf of the property owner, or business-owner and commit to deposit the sum of $ **3000** to be used to pay the City's expenses to review, evaluate and process the Application ("Deposit"), which funds may be used to pay the cost of third-party consultants plus fifteen percent (15%) of such actual costs for City staff administrative costs and supplies. **I understand that if Formal Land Use Application costs exceed the amount collected, the City will invoice me, as the applicant, for the additional consultant cost plus a 15% administrative fee.** I additionally agree that I am not acquiring any rights by virtue of the payment of the City's expenses.

Submit Formal Land Use Applications to: **julie.esterl@baselinecorp.com**

Applicant's Signature Matt Collins, P.E. Date **7/28/2020**

FOR CITY USE ONLY: Received by: Julie Esterl, Baseline Date: 7/29/2020

6/16/2020

Ms. Julie Esterl
Associate Planner
Baseline Engineering, Planning & Surveying
112 North Rubey Drive, Suite 210
Golden, CO 80403

VIA EMAIL

RE: Golden Gilpin Mill, Lot Line Removal (Minor Subdivision Plat)

Dear Ms. Esterl,

It is BH Mining Company's intention (on behalf of the George E. Otten, Jr. Estate) to reactivate the Golden Gilpin Mill site with the goal of safely processing gold ore from the Bates Hunter mine. In order to attain this goal, we need to delete the property line between mill sites 10 and 11 in order to decrease offsets between existing and planned structures. Additionally, we will be completing the rebuilding and strengthening of the existing mill building and constructing a new tailings dewatering facility (sand barn) and thickening tank on the south side of the property. The site will be improved in many ways, including the final grading and surfacing, storm water runoff, sanitary sewer and city water connections and we will address any deficiencies in infrastructure discovered during the rehabilitation process. Our timeframe for this project would see completion within the next six to eight months if possible, depending primarily on the permitting process and material procurement timing.

Mike Meter
Mill Manager

Enc: none

CC: Matt Collins, Black Fox Mining LLC
Stephen Humphray, GS Mining Company, LLC
Darrell Otten, George E. Otten, Jr. Estate
Robyn Kube, Dietz and Davis, P.C.

Black Fox Mining LLC
1508 Ridge Road, Nederland, CO 80466
(303) 570-6269

GEORGE E. OTTEN, JR. ESTATE

DARRELL B. OTTEN, PERSONAL REPRESENTATIVE
PO Box 2011
FARMINGTON, NM 87499
505-325-2104

January 7, 2020

Mike Meter, Mill Manager
Golden Gilpin Mill
Back Fox Mining
PO Box 581
Blackhawk, CO 80422

Dear Mike:

As Personal Representative to the George E. Otten, Jr. Estate, I am authorizing the consolidation of Parcel #1833-072-01-022, "Millsite 10" and Parcel #1833-072-01-035, "Millsite 11" located in Gilpin County in the City of Black Hawk.

Per your request, this consolidation is to eliminate property boundaries, thereby negating the mandatory offsets in the city building codes.

Darrell B. Otten, Personal Representative

STATE OF NEW MEXICO)
) SS:
COUNTY OF SAN JUAN)

Official Seal
TANDRA VALENTINE
Notary Public
State of New Mexico
My Commission Expires 07/01/23

Subscribed, sworn to, and acknowledged before me by DARRELL B. OTTEN, Personal Representative this 7th day of January, 2020.

Notary Public

My Commission Expires: 07/01/23

District Court, Weld County, Colorado PO Box 2038 Greeley, CO 80632 901 Ninth Avenue, Greeley, CO 80631 Telephone: 970-475-2505	DATE FILED: March 8, 2018
In the Matter of the Estate of: **GEORGE E. OTTEN, JR., aka GEORGE OTTEN** **Deceased**	▲ **COURT USE ONLY** ▲ Case Number: 2018PR30143 Division 1 Courtroom

LETTERS TESTAMENTARY

Darrell B. Otten was appointed or qualified by this Court or its Registrar on March 8th, 2018 (date) as:

☒ Personal Representative.
☐ Successor Personal Representative.

The Decedent died on January 27, 2018.

These Letters are proof of the Personal Representative's authority to act pursuant to §15-12-701, et.seq, C.R.S. except for the following restrictions, if any: none

Date: March 8th, 2018

Probate Registrar/(Deputy)Clerk of Court

CERTIFICATION

Certified to be a true copy of the original in my custody and to be in full force and effect as of SEP 26 2019 (date).

Probate Registrar/(Deputy)Clerk of Court

WELD COMBINED COURTS SEAL WELD COUNTY, COLORADO

JDF 915 1/09 LETTERS TESTAMENTARY/OF ADMINISTRATION

11/22/2011 12:48 PM 145311
COLLEEN STEWART GILPIN COUNTY
Recept #145311 Page 1 of 1
DEE BARGAIN AND SALE DEED Total Fee 11.00 Doc Fee 0.00

Gilpin County
State Documentary Fee
$

BARGAIN AND SALE DEED

George E. Otten Jr. whose street address is 11438 Weld County Road 19, Town of Fort Lupton, County of Weld and State of Colorado, for the consideration of less than five hundred dollars, in hand paid, hereby sell(s) and convey(s) to George E. Otten Jr. Trust, whose street address is 8010 South County Road 5, Suite 206, City of Windsor, County of Larimer, State of Colorado, the following real property in the County of Gilpin and State of Colorado, to wit:

Mill Bldg & Mill Site #10, less .05 A deeded for Hwy Blk Hwk
Millsite 11 D B 229 P 260, less Hwy Blk Hwk & Imps

also known by street and number as: Gold Gilpin Mill

with all appurtenances, subject to [NONE]

Signed this 20th day of Oct., 2011

George E. Otten Jr.

Real Property Transfer Declaration Not Received

Convenience Deed

STATE OF COLORADO)
) ss.
* COUNTY OF Larimer)

The foregoing instrument was acknowledged before me this 20th day of October, 2011, by George E. Otten Jr.

Witness my hand and official seal.

My commission expires: 10-10-15

Notary Public

AIMEE PACHON NOTARY PUBLIC STATE OF COLORADO

7/9/2020

To whom it may concern,

In order to proceed with our request for a minor subdivision of the Golden Gilpin Mill property described as parcel #1833-072-01-022 and 1833-072-01-035 we are asking for a variance as to lot conformance/size in the ECP district. The proposed lot does not meet the minimum lot area of 5 acres and may not meet the minimum depth standards of 200 feet. The circumstances causing this hardship were not caused by the owners of this property(The George E. Otten Jr. Trust) or by Black Fox or GS Mining. Additionally, due to the extraordinary circumstances unique to this property for which the variance is sought, the strict enforcement of the provisions of this chapter would cause an unnecessary hardship on the applicant by preventing the construction of necessary buildings to complete the project. Please feel free to contact me with any questions or concerns.

Thank you,

Mike Meter

Mill Manager

Golden Gilpin Mill

Black Fox Mining

mmeter@blackfoxmining.com

303-810-1250

THE GOLDEN GILPIN MILL SITE SUBDIVISION

BEING MILL SITE NO.10 & MILL SITE NO.11 CITY OF BLACK HAWK
LOCATED IN THE NW 1/4 OF SEC.7 T-3-S R-72-W OF THE 6th P.M.
CITY OF BLACK HAWK, COUNTY OF GILPIN, STATE OF COLORADO

OWNER'S STATEMENT
Know all men by these presents: The Black Fox Mining is the owner of that real property situated in the City of Black Hawk, Gilpin County, Colorado, more fully described as follows:
A CERTAIN PARCEL OF LAND LOCATED IN THE NW ¼ SECTION 7 TOWNSHIP 3 SOUTH RANGE 72 WEST OF THE 6TH P.M., BEING
MORE PARTICULARLY DESCRIBED AS FOLLOWS:
COMMENCING AT THE NW CORNER OF SEC.7 T-3-S R-72-W OF THE 6TH P.M. THENCE S 14°46'45" E 1462.58 FEET TO THE POINT OF BEGINNING AT THE SW CORNER OF MILL SITE #10
THENCE N 15°44'42" E 464.66 FEET TO THE NW CORNER OF MILL SITE #10; THENCE S 89°24'53" E 167.23 FEET TO A POINT ON THE WEST R.O.W. LINE OF STATE HIGHWAY 119;
THENCE ON AN ARC TO THE RIGHT ALONG SAID WESTERLY R.O.W. LINE HAVING A RADIUS OF 975.00 FEET, AN ARC LENGTH OF 296.39 FEET AND A CHORD THAT BEARS S 16°04'28" W AND MEASURES 295.25 FEET TO A POINT; THENCE CONTINUING ALONG SAID WEST R.O.W. LINE S 24°47'00" W 251.52 FEET TO A POINT OF CURVATURE; THENCE ON AN ARC TO THE LEFT ALONG SAID WEST R.O.W. LINE HAVING A RADIUS OF 516.61 FEET, AN ARC LENGTH OF 210.02 FEET AND A CHORD THAT BEARS S 13°08'13" W AND MEASURES 208.58 FEET TO A POINT; THENCE
N 76°47'43" W 202.26 FEET TO THE SW CORNER OF MILL SITE #11; THENCE N 15°44'42" E 253.20 FEET TO THE NW CORNER OF MILL SITE #11;
THENCE S 74°51'05" E 34.81 FEET TO THE POINT OF BEGINNING.
TOGETHER WITH THAT PORTION OF MILL SITE #11 LOCATED EAST OF STATE HIGHWAY NO.119 DESCRIBED AS FOLLOWS:
BEGINNING AT THE SE CORNER OF MILL SITE #11;
THENCE N 15°44'42" E ALONG THE EAST LINE OF SAID MILL SITE #11 241.71 FEET TO THE NE CORNER OF MILL SITE #11;
THENCE N 74°51'05" W 27.92 FEET TO A POINT ON THE EAST R.O.W. LINE OF STATE HIGHWAY NO. 119;
THENCE ON AN ARC TO THE LEFT ALONG SAID EAST R.O.W. LINE HAVING A RADIUS OF 416.61 FEET, AN ARC LENGTH OF 189.48 FEET AND A CHORD THAT BEARS S 11°45'13" W AND MEASURES 187.85 FEET TO A POINT; THENCE S 77°11'36" E 10.83 FEET TO THE POINT OF BEGINNING.
CONTAINING 3.1022 ACRES OR 135130.96 SQ. FT. MORE OR LESS.
CITY OF BLACK HAWK,
COUNTY OF GILPIN,
STATE OF COLORADO.
that has caused said real property to be laid out and surveyed as The Golden Gilpin Mill Site Subdivision, and does hereby dedicate and set apart all the streets, alleys and other public ways and places shown on the accompanying plat for the use of the public forever, and does hereby grant to the City of Black Hawk use of those portions of said real property which are indicated as easements on the accompanying plat as permanent public easements.
In witness whereof, Black Fox Mining has caused his name to be hereunto subscribed this _____ day of _____, 20____.
(owner's signature)_____

State of Colorado)
) ss
County of Gilpin)

The foregoing instrument was acknowledged before me this _____ day of _____, 20____, by _____ for and on behalf of Black Fox Mining.
Witness my hand and official seal.
My commission expires: _____.
_____
Notary Public

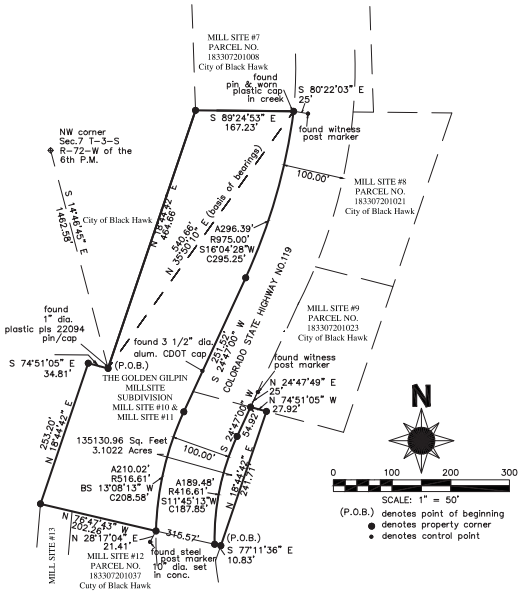

SURVEYOR'S CERTIFICATE
I, Peter M. Palombo a duly registered land surveyor in the State of Colorado, do hereby certify that this plat of (subdivision name), truly and correctly represents the results of a survey made by me or under my direction, and that said plat complies with the requirements of Title 38, Article 51, C.R.S., and that the monuments required by said Statute and by the Subdivision Ordinance for the City of Black Hawk have been placed on the ground.
The location of the buildings and other land improvements on this plat do not necessarily represent their final location. The formal location of the buildings and improvements will be identified on the as-built map or improvement survey which must be submitted to the City prior to receiving a Certificate of Occupancy.
This plat is a true and accurate representation of said survey.
(surveyor's signature)_____

stamp

State of Colorado)
) ss.
County of Gilpin)

The foregoing instrument was acknowledged before me this _____ day of _____, 20____, by Peter M. Palombo
Witness my hand and official seal.
My commission expires: _____.
_____

NOTES:

1. SURVEY COMMENCED 1-7-20, SURVEY COMPLETED 1-25-20.
2. ANY PERSON WHO KNOWINGLY REMOVES, ALTERS OR DEFACES ANY PUBLIC LAND SURVEY MONUMENT OR LAND BOUNDARY MONUMENT OR ACCESSORY COMMITS A CLASS TWO (2) MISDEMEANOR PURSUANT TO STATE STATUTE 18-4-508,C.R.S.
3. PORTIONS OF SUBJECT PROPERTY ARE LOCATED WITHIN FEMA 100 YEAR FLOOD ZONE AE, FIRM COMMUNITY PANEL NUMBER 080077 0001 C, CITY OF CENTRAL CITY, COLORADO GILPIN COUNTY, EFFECTIVE DATE: 2-16-94, AS SHOWN HEREON.
4. THE DISTANCE MEASUREMENTS USED HEREON ARE IN US SURVEY FEET.
5. CORNERS SET ARE 18" NO. 5 REBAR WITH A 1 ½" ALUMINUM CAP STAMPED 33197.
6. NEW LEGAL DESCRIPTIONS PREPARED ARE THE SAME REAL ESTATE DESCRIBED IN THE EXISTING RECORD LEGAL DESCRIPTIONS. COURSES AND DISTANCES ARE DETERMINED BY ACTUAL SURVEYED LOCATIONS IN THE FIELD.
7. NO POSTED OR RECORD ADDRESS FOR SUBJECT PROPERTY.
8. POSITION OF STATE HIGHWAY NO.119 DETERMINED BY FOUND SURVEY MONUMENTS.
9. THE PURPOSE OF THIS SUBDIVISION PLAT IS TO ELIMINATE THE BOUNDARY LINE BETWEEN MILL SITE #10 & MILL SITE #11, CITY OF BLACK HAWK, THUS CREATING ONE (1) LOT IN THE NAME AND STYLE OF THE GOLDEN GILPIN MILL SITE SUBDIVISION AS SHOWN AND DEPICTED HEREON.
10. CLOSURE STATEMENT: THE BOUNDARY DEPICTED HEREON HAS A CLOSURE OF LESS THAN 1:50000 AS CALCULATED USING BEARINGS AND DISTANCES SHOWN.

BASIS OF BEARINGS: (ASSUMED)

THE BASIS OF BEARINGS OF THIS SURVEY IS THE LINE BETWEEN THE FOUND MONUMENTS AS SHOWN AND DESCRIBED HEREON, THE LINE BETWEEN THE FOUND PIN/CAP MARKING THE SW CORNER OF MILL SITE NO.10 AND THE FOUND PIN/CAP MARKING THE NE CORNER OF MILL SITE NO.10, IS ASSUMED TO BEAR N 35°50'10" E AND MEASURES 540.66 FEET.

LEGAL DESCRIPTION: (current record description) per Gilpin County Records

MILL SITE #10, PARCEL NO. 183307201022 AND MILL SITE #11, PARCEL NO. 183307201035 EXCEPTING ANY PORTION CONTAINED WITH THE STATE HIGHWAY NO.119 RIGHT-OF-WAY.
CITY OF BLACK HAWK,
COUNTY OF GILPIN,
STATE OF COLORADO.

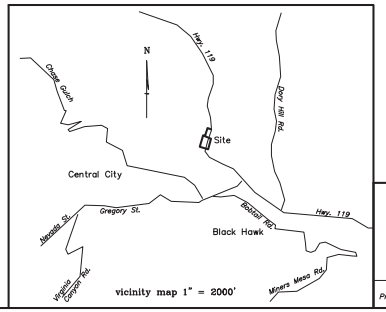

Tripod Geometrics Surveying LLC
Peter M. Palombo PLS
3604 Swan Lane
Fort Collins, CO 80524
PLS 33197 Bus: (720) 849-7509
peterpalombo@aol.com

Proj.# DWG.: ms_10_11_GoldGilp_fin_plat.dwg	DATE OF PREPARATION: 1-27-20	1 OF 1

Improvement Survey Plat & Topographic Survey

MILL SITE NO.10 & MILL SITE NO.11 CITY OF BLACK HAWK
LOCATED IN THE NW 1/4 OF SEC.7 T-3-S R-72-W OF THE 6th P.M.
CITY OF BLACK HAWK, COUNTY OF GILPIN, STATE OF COLORADO

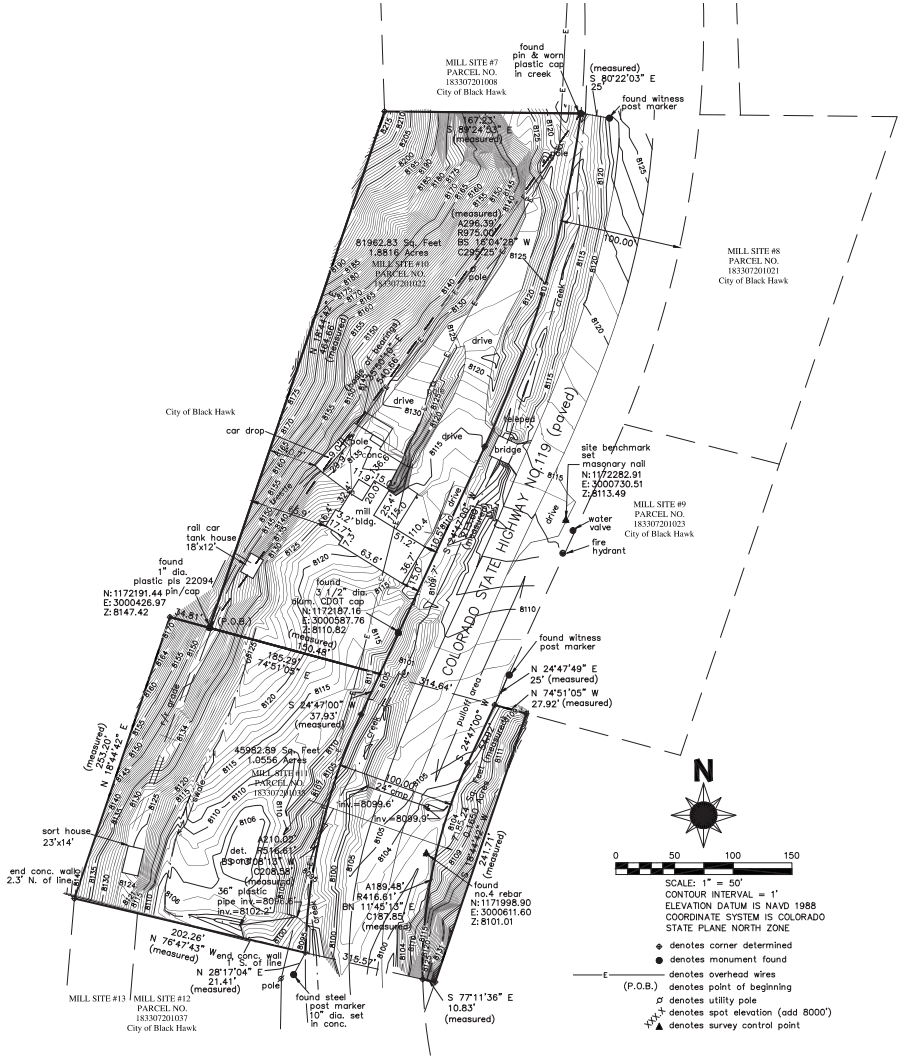

NOTES:

1. SURVEY COMMENCED 1-7-20, SURVEY COMPLETED 1-25-20.
2. ANY PERSON WHO KNOWINGLY REMOVES, ALTERS OR DEFACES ANY PUBLIC LAND SURVEY MONUMENT OR LAND BOUNDARY MONUMENT OR ACCESSORY COMMITS A CLASS TWO (2) MISDEMEANOR PURSUANT TO STATE STATUTE 18-4-508,C.R.S.
3. PORTIONS OF SUBJECT PROPERTY ARE LOCATED WITHIN FEMA 100 YEAR FLOOD ZONE AE, FIRM COMMUNITY PANEL NUMBER 080077 0001 C, CITY OF CENTRAL CITY, COLORADO GILPIN COUNTY, EFFECTIVE DATE: 2-16-94, AS SHOWN HEREON.
4. THE DISTANCE MEASUREMENTS USED HEREON ARE IN US SURVEY FEET.
5. CORNERS SET ARE 18" NO. 5 REBAR WITH A 1 ½" ALUMINUM CAP STAMPED 33197.
6. NEW LEGAL DESCRIPTIONS PREPARED ARE THE SAME REAL ESTATE DESCRIBED IN THE EXISTING RECORD LEGAL DESCRIPTIONS. COURSES AND DISTANCES ARE DETERMINED BY ACTUAL SURVEYED LOCATIONS IN THE FIELD.
7. POSITION OF STATE HIGHWAY NO.119 DETERMINED BY FOUND SURVEY MONUMENTS.
8. BASIS OF ELEVATIONS IS STATIC GPS OBSERVATION, DATUM IS NAVD 1988.

BASIS OF BEARINGS: (ASSUMED)

THE BASIS OF BEARINGS OF THIS SURVEY IS THE LINE BETWEEN THE FOUND MONUMENTS AS SHOWN AND DESCRIBED HEREON, THE LINE BETWEEN THE FOUND PIN/CAP MARKING THE SW CORNER OF MILL SITE NO.10 AND THE FOUND PIN/CAP MARKING THE NE CORNER OF MILL SITE NO.10, IS ASSUMED TO BEAR N 35°50'10" E AND MEASURES 540.66 FEET.

LEGAL DESCRIPTION: (current record description) per Gilpin County Records

MILL SITE #10, PARCEL NO. 183307201022 AND MILL SITE #11, PARCEL NO. 183307201035 EXCEPTING ANY PORTION CONTAINED WITHIN THE STATE HIGHWAY NO.119 RIGHT-OF WAY. CITY OF BLACK HAWK, COUNTY OF GILPIN, STATE OF COLORADO.

PROPERTY DESCRIPTION: (as measured and monumented)

A CERTAIN PARCEL OF LAND LOCATED IN THE NW ¼ SECTION 7 TOWNSHIP 3 SOUTH RANGE 72 WEST OF THE 6TH P.M., BEING MORE PARTICULARLY DESCRIBED AS FOLLOWS:
COMMENCING AT THE NW CORNER OF SEC.7 T-3-S R-72-W OF THE 6TH P.M. THENCE S 14°46'45" E 1462.58 FEET TO THE POINT OF BEGINNING AT THE SW CORNER OF MILL SITE #10;
THENCE N 18°44'42" E 484.68 FEET TO THE NW CORNER OF MILL SITE #10; THENCE S 89°24'53" E 167.23 FEET TO A POINT ON THE WEST R.O.W. LINE OF STATE HIGHWAY 119;
THENCE ON AN ARC TO THE RIGHT ALONG SAID WESTERLY R.O.W. LINE HAVING A RADIUS OF 975.00 FEET, AN ARC LENGTH OF 296.39 FEET AND A CHORD THAT BEARS S 16°04'28" W AND MEASURES 295.25 FEET TO A POINT; THENCE CONTINUING ALONG SAID WEST R.O.W. LINE S 24°47'00" W 251.53 FEET TO A POINT OF CURVATURE; THENCE ON AN ARC TO THE LEFT ALONG SAID WEST R.O.W. LINE HAVING A RADIUS OF 516.61 FEET, AN ARC LENGTH OF 210.02 FEET AND A CHORD THAT BEARS
S 13°08'13" W AND MEASURES 208.58 FEET TO A POINT; THENCE N 76°47'43" W 202.26 FEET TO THE SW CORNER OF MILL SITE #11; THENCE N 18°44'42" E 253.20 FEET TO THE NW CORNER OF MILL SITE #11; THENCE S 74°51'05" E 34.81 FEET TO THE POINT OF BEGINNING.
TOGETHER WITH THAT PORTION OF MILL SITE #11 LOCATED EAST OF STATE HIGHWAY NO.119 DESCRIBED AS FOLLOWS:
BEGINNING AT THE SE CORNER OF MILL SITE #11;
THENCE N 18°44'42" E ALONG THE EAST LINE OF SAID MILL SITE #11 241.71 FEET TO THE NE CORNER OF MILL SITE #11;
THENCE N 74°51'05" W 27.92 FEET TO A POINT ON THE EAST R.O.W. LINE OF STATE HIGHWAY NO. 119;
THENCE ON AN ARC TO THE LEFT ALONG SAID EAST R.O.W. LINE HAVING A RADIUS OF 416.61 FEET, AN ARC LENGTH OF 189.48 FEET AND A CHORD THAT BEARS S 11°45'13" W AND MEASURES 187.85 FEET TO A POINT; THENCE S 7°11'36" E 10.83 FEET TO THE POINT OF BEGINNING.
CONTAINING 3.1022 ACRES OR 135130.96 SQ. FT. MORE OR LESS.
CITY OF BLACK HAWK,
COUNTY OF GILPIN,
STATE OF COLORADO.

SURVEYOR'S CERTIFICATE

I Peter M. Palombo, a Colorado Registered Professional Land Surveyor, do hereby certify that the survey was performed by me or under my responsible charge, supervision and checking in accordance with Colorado State Law, and that it is correct to the best of my professional knowledge, belief and opinion, and that this plat accurately and properly shows the parcels described herein and the survey thereof.

Signed: _____ Date: 1-27-20 Seal:

PETER M. PALOMBO P.L.S. 33197

COLORADO REGISTERED PETER M. PALOMBO 33197 PROFESSIONAL LAND SURVEYOR

Tripod Geometrics Surveying LLC
Peter M. Palombo PLS
3604 Swan Lane
Fort Collins, CO 80524
PLS 33197 Bus: (720) 849-7509
peterpalombo@aol.com

Proj.# DWG.: ms_10_11_GoldGiltopo_1_27_20.dwg	DATE OF PREPARATION: 1-27-20	1 OF 1

ALTA/NSPS Land Title Survey

MILL SITE NO.10 & MILL SITE NO.11 CITY OF BLACK HAWK
LOCATED IN THE NW 1/4 OF SEC.7 T-3-S R-72-W OF THE 6th P.M.
CITY OF BLACK HAWK, COUNTY OF GILPIN, STATE OF COLORADO

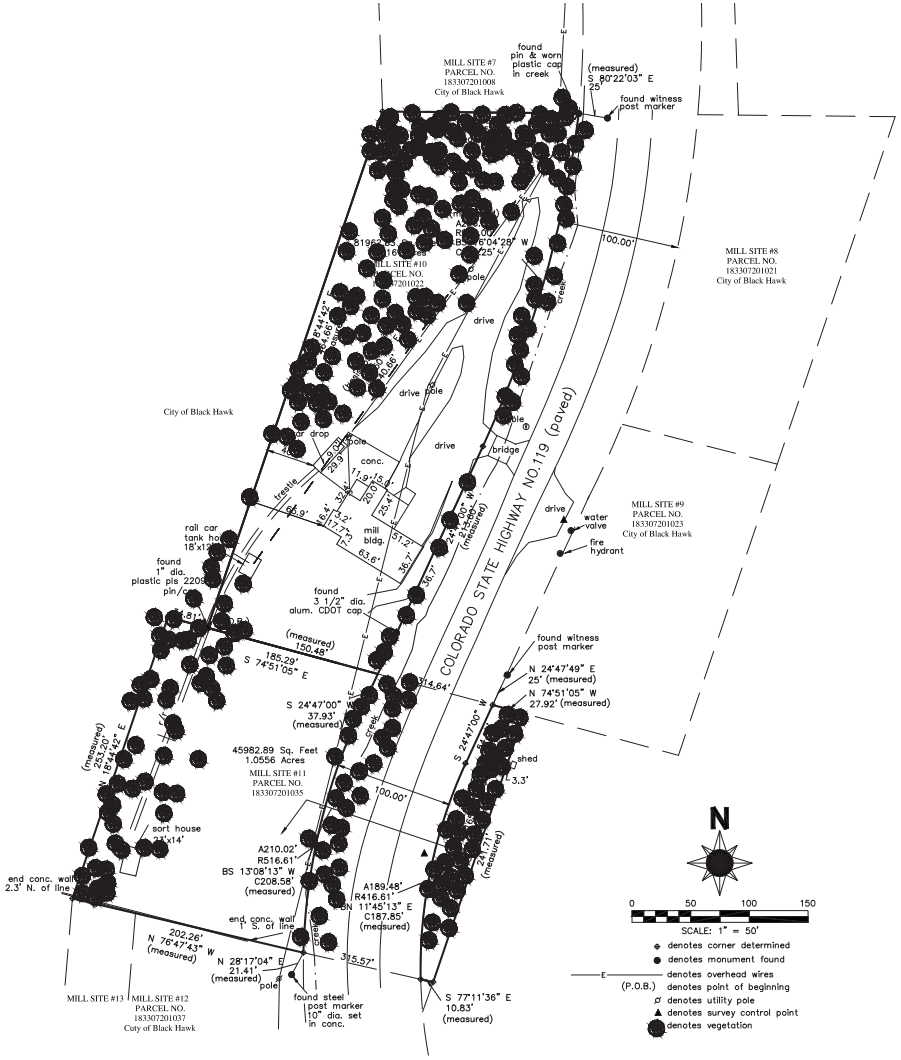

NOTES:

1. SURVEY COMMENCED 1-7-20, SURVEY COMPLETED 1-25-20.

2. ANY PERSON WHO KNOWINGLY REMOVES, ALTERS OR DEFACES ANY PUBLIC LAND SURVEY MONUMENT OR LAND BOUNDARY MONUMENT OR ACCESSORY COMMITS A CLASS TWO (2) MISDEMEANOR PURSUANT TO STATE STATUTE 18-4-508,C.R.S.

3. PORTIONS OF SUBJECT PROPERTY ARE LOCATED WITHIN FEMA 100 YEAR FLOOD ZONE AE, FIRM COMMUNITY PANEL NUMBER 080077 0001 C, CITY OF CENTRAL CITY, COLORADO GILPIN COUNTY, EFFECTIVE DATE: 2-16-94, AS SHOWN HEREON.

4. THE DISTANCE MEASUREMENTS USED HEREON ARE IN US SURVEY FEET.

5. CORNERS SET ARE 18" NO. 5 REBAR WITH A 1 ½" ALUMINUM CAP STAMPED 33197.

6. NEW LEGAL DESCRIPTIONS PREPARED ARE THE SAME REAL ESTATE DESCRIBED IN THE EXISTING RECORD LEGAL DESCRIPTIONS. COURSES AND DISTANCES ARE DETERMINED BY ACTUAL SURVEYED LOCATIONS IN THE FIELD.

7. POSITION OF STATE HIGHWAY NO.119 DETERMINED BY FOUND SURVEY MONUMENTS.

BASIS OF BEARINGS: (ASSUMED)

THE BASIS OF BEARINGS OF THIS SURVEY IS THE LINE BETWEEN THE FOUND MONUMENTS AS SHOWN AND DESCRIBED HEREON, THE LINE BETWEEN THE FOUND PIN/CAP MARKING THE SW CORNER OF MILL SITE NO.10 AND THE FOUND PIN/CAP MARKING THE NE CORNER OF MILL SITE NO.10, IS ASSUMED TO BEAR N 35°50'10" E AND MEASURES 540.66 FEET.

LEGAL DESCRIPTION: (current record description) per Gilpin County Records

MILL SITE #10, PARCEL NO. 183307201022 AND MILL SITE #11, PARCEL NO. 183307201035 EXCEPTING ANY PORTION CONTAINED WITHIN THE STATE HIGHWAY NO.119 RIGHT-OF WAY. CITY OF BLACK HAWK, COUNTY OF GILPIN, STATE OF COLORADO.

PROPERTY DESCRIPTION: (as measured and monumented)

A CERTAIN PARCEL OF LAND LOCATED IN THE NW ¼ SECTION 7 TOWNSHIP 3 SOUTH RANGE 72 WEST OF THE 6TH P.M., BEING MORE PARTICULARLY DESCRIBED AS FOLLOWS:
COMMENCING AT THE NW CORNER OF SEC.7 T-3-S R-72-W OF THE 6TH P.M. THENCE S 14°46'45" E 1462.58 FEET TO THE POINT OF BEGINNING AT THE SW CORNER OF MILL SITE #10;
THENCE N 18°44'42" E 484.66 FEET TO THE NW CORNER OF MILL SITE #10; THENCE S 89°24'53" E 167.23 FEET TO A POINT ON THE WEST R.O.W. LINE OF STATE HIGHWAY 119;
THENCE ON AN ARC TO THE RIGHT ALONG SAID WESTERLY R.O.W. LINE HAVING A RADIUS OF 975.00 FEET, AN ARC LENGTH OF 296.39 FEET AND A CHORD THAT BEARS S 16°04'28" W AND MEASURES 295.25 FEET TO A POINT; THENCE CONTINUING ALONG SAID WEST R.O.W. LINE S 24°47'00" W 251.52 FEET TO A POINT OF CURVATURE; THENCE ON AN ARC TO THE LEFT ALONG SAID WEST R.O.W. LINE HAVING A RADIUS OF 516.61 FEET, AN ARC LENGTH OF 210.02 FEET AND A CHORD THAT BEARS
S 13°08'13" W AND MEASURES 208.58 FEET TO A POINT; THENCE N 76°47'43" W 202.26 FEET TO THE SW CORNER OF MILL SITE #11; THENCE N 18°44'42" E 253.20 FEET TO THE NW CORNER OF MILL SITE #11; THENCE S 74°51'05" E 34.81 FEET TO THE POINT OF BEGINNING.
TOGETHER WITH THAT PORTION OF MILL SITE #11 LOCATED EAST OF STATE HIGHWAY NO.119 DESCRIBED AS FOLLOWS:
BEGINNING AT THE SE CORNER OF MILL SITE #11;
THENCE N 18°44'42" E ALONG THE EAST LINE OF SAID MILL SITE #11 241.71 FEET TO THE NE CORNER OF MILL SITE #11;
THENCE N 74°51'05" W 27.92 FEET TO A POINT ON THE EAST R.O.W. LINE OF STATE HIGHWAY NO. 119;
THENCE ON AN ARC TO THE LEFT ALONG SAID EAST R.O.W. LINE HAVING A RADIUS OF 416.61 FEET, AN ARC LENGTH OF 189.48 FEET AND A CHORD THAT BEARS S 11°45'13" W AND MEASURES 187.85 FEET TO A POINT; THENCE S 77°11'36" E 10.83 FEET TO THE POINT OF BEGINNING.
CONTAINING 3.1022 ACRES OR 135130.86 SQ. FT. MORE OR LESS.
CITY OF BLACK HAWK,
COUNTY OF GILPIN,
STATE OF COLORADO.

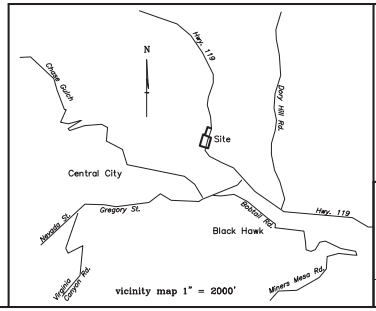

SURVEYOR'S CERTIFICATE:

To: Black Fox Mining:

This is to certify that this map or plat and the survey on which it is based were made in accordance with the 2016 Minimum Standard Detail Requirements for ALTA/NSPS Land Title Surveys, jointly established and adopted by ALTA and NSPS, and includes items 1, 4, 7(a), 8, 11 and 13 of table A thereof. The field work was completed on 1-25-20.

Date of Plat or Map: 1-27-20

Signed: _____ Date: 1-27-2020

PETER M. PALOMBO P.L.S. 33197

COLORADO REGISTERED PROFESSIONAL LAND SURVEYOR 33197 PETER M. PALOMBO

Tripod Geometrics Surveying LLC
Peter M. Palombo PLS
3604 Swan Lane
Fort Collins, CO 80524
PLS 33197 Bus: (720) 849-7509
peterpalombo@aol.com

Proj.# DWG.: ms_10_11_GoldGilpALTA_rev_1_20.dwg | DATE OF PREPARATION: 1-27-20 | 1 OF 1

THE GOLDEN GILPIN MILL SITE MINOR SUBDIVISION

BEING MILL SITE NO.10 & A PORTION OF MILL SITE NO.11 CITY OF BLACK HAWK
LOCATED IN THE NW 1/4 OF SEC.7 T-3-S R-72-W OF THE 6th P.M.
CITY OF BLACK HAWK, COUNTY OF GILPIN, STATE OF COLORADO

OWNER'S STATEMENT
Know all men by these presents: The Black Fox Mining is the owner of that real property situated in the City of Black Hawk, Gilpin County, Colorado, more fully described as follows: A CERTAIN PARCEL OF LAND LOCATED IN THE NW ¼ SECTION 7 TOWNSHIP 3 SOUTH RANGE 72 WEST OF THE 6TH P.M., BEING MORE PARTICULARLY DESCRIBED AS FOLLOWS: COMMENCING AT THE W 1/4 CORNER OF SEC.7 T-3-S R-72-W OF THE 6TH P.M. THENCE N 17°20'34" E 1412.22 FEET TO THE POINT OF BEGINNING AT THE SW CORNER OF MILL SITE #10 THENCE N 18°44'42" E 464.66 FEET TO THE NW CORNER OF MILL SITE #10; THENCE S 89°24'53" E 167.23 FEET TO A POINT ON THE WEST R.O.W. LINE OF STATE HIGHWAY 119; THENCE ON AN ARC TO THE RIGHT ALONG SAID WESTERLY R.O.W. LINE HAVING A RADIUS OF 975.00 FEET, AN ARC LENGTH OF 296.39 FEET AND A CHORD THAT BEARS S 16°04'28" W AND MEASURES 295.25 FEET TO A POINT; THENCE CONTINUING ALONG SAID WEST R.O.W. LINE S 24°47'00" W 251.52 FEET TO A POINT OF CURVATURE; THENCE ON AN ARC TO THE LEFT ALONG SAID WEST R.O.W. LINE HAVING A RADIUS OF 516.61 FEET, AN ARC LENGTH OF 210.02 FEET AND A CHORD THAT BEARS S 13°08'13" W AND MEASURES 208.58 FEET TO A POINT; THENCE N 76°47'43" W 202.26 FEET TO THE SW CORNER OF MILL SITE #11; THENCE N 18°44'42" E 253.20 FEET TO THE NW CORNER OF MILL SITE #11; THENCE S 74°51'05" E 34.81 FEET TO THE POINT OF BEGINNING. CONTAINING 2.9372 ACRES OR 127945.72 SQ. FT. MORE OR LESS.
CITY OF BLACK HAWK,
COUNTY OF GILPIN,
STATE OF COLORADO.
that has caused said real property to be laid out and surveyed as The Golden Gilpin Mill Site Minor Subdivision, and does hereby dedicate and set apart all the streets, alleys and other public ways and places shown on the accompanying plat for the use of the public forever, and does hereby grant to the City of Black Hawk use of those portions of said real property which are indicated as easements on the accompanying plat as permanent public easements.
In witness whereof, Black Fox Mining has caused his name to be hereunto subscribed this _____ day of _____, 20____.
(owner's signature)_____ AS _____

State of Colorado)
) ss
County of Gilpin)

The foregoing instrument was acknowledged before me this _____ day of _____, 20____, by_____ as_____for and on behalf of Black Fox Mining.
Witness my hand and official seal.
My commission expires: _____.
_____
Notary Public

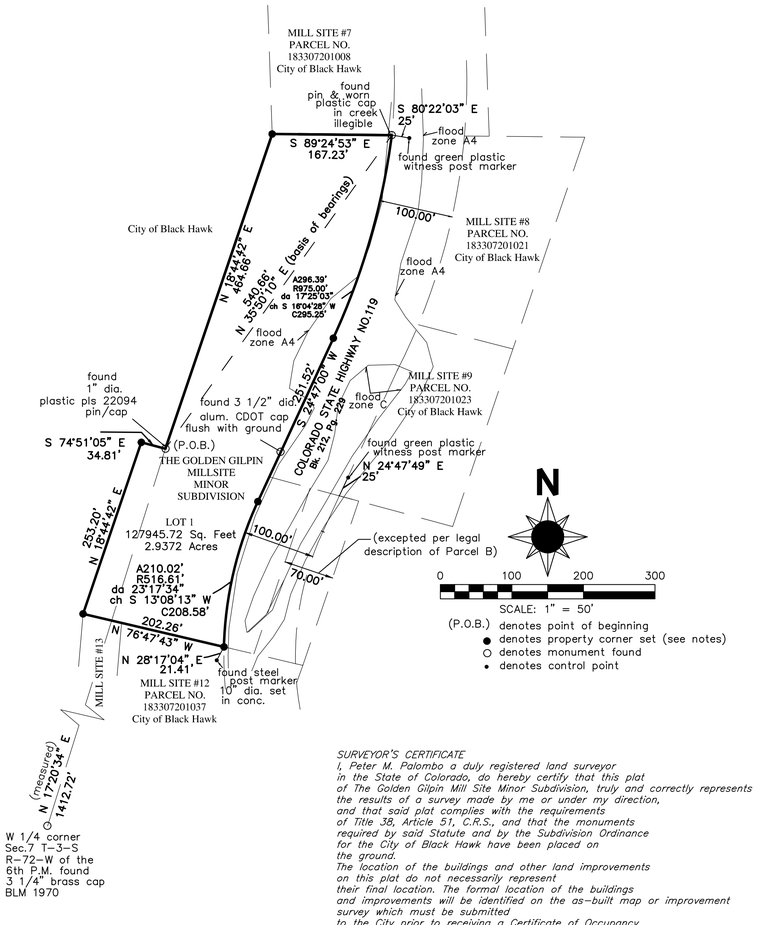

SURVEYOR'S CERTIFICATE
I, Peter M. Palombo a duly registered land surveyor in the State of Colorado, do hereby certify that this plat of The Golden Gilpin Mill Site Minor Subdivision, truly and correctly represents the results of a survey made by me or under my direction, and that said plat complies with the requirements of Title 38, Article 51, C.R.S., and that the monuments required by said Statute and by the Subdivision Ordinance for the City of Black Hawk have been placed on the ground.
The location of the buildings and other land improvements on this plat do not necessarily represent their final location. The formal location of the buildings and improvements will be identified on the as-built map or improvement survey which must be submitted to the City prior to receiving a Certificate of Occupancy.
This plat is a true and accurate representation of said survey.
(surveyor's signature)_____
stamp

COLORADO REGISTERED PETER M. PALOMBO 33197 PROFESSIONAL LAND SURVEYOR

State of Colorado)
) ss.
County of Gilpin)

The foregoing instrument was acknowledged before me this _____ day of _____, 20____, by Peter M. Palombo
Witness my hand and official seal.
My commission expires: _____.
_____

NOTES:

1. SURVEY COMMENCED 1-7-20, SURVEY COMPLETED 1-25-20.

2. ANY PERSON WHO KNOWINGLY REMOVES, ALTERS OR DEFACES ANY PUBLIC LAND SURVEY MONUMENT OR LAND BOUNDARY MONUMENT OR ACCESSORY COMMITS A CLASS TWO (2) MISDEMEANOR PURSUANT TO STATE STATUTE 18-4-508,C.R.S.

3. PORTIONS OF SUBJECT PROPERTY ARE LOCATED WITHIN FEMA 100 YEAR FLOOD ZONE A4 INDICATING AREAS OF 100-YEAR FLOOD; BASE FLOOD ELEVATIONS AND FLOOD HAZARD FACTORS DETERMINED. FIRM COMMUNITY PANEL NUMBER 080076 0001 B, CITY OF BLACK HAWK, COLORADO GILPIN COUNTY, EFFECTIVE DATE: 10-16-84, AS SHOWN HEREON.

4. THE DISTANCE MEASUREMENTS USED HEREON ARE IN US SURVEY FEET.

5. CORNERS SET ARE 18" NO. 5 REBAR WITH A 1 ½" ALUMINUM CAP STAMPED 33197.

6. NEW LEGAL DESCRIPTION PREPARED ARE THE SAME REAL ESTATE DESCRIBED IN THE EXISTING RECORD LEGAL DESCRIPTIONS. COURSES AND DISTANCES ARE DETERMINED BY ACTUAL SURVEYED LOCATIONS IN THE FIELD.

7. ADDRESS FOR SUBJECT PROPERTY:
7593 HIGHWAY 119 BLACK HAWK, CO 80422

8. POSITION OF STATE HIGHWAY NO.119 DETERMINED BY FOUND SURVEY MONUMENTS.

9. THE PURPOSE OF THIS MINOR SUBDIVISION IS TO ELIMINATE THE BOUNDARY LINE BETWEEN MILL SITE #10 & MILL SITE #11, CITY OF BLACK HAWK, THUS CREATING ONE (1) LOT IN THE NAME AND STYLE OF THE GOLDEN GILPIN MILL SITE MINOR SUBDIVISION AS SHOWN AND DEPICTED HEREON.

10. MOUNTAIN LAND TITLE, LLC ORDER NO. MLT2020-4392 DATED 9-9-2020 RELIED UPON FOR THE PREPARATION OF THIS MINOR SUBDIVISION.

BASIS OF BEARINGS: (ASSUMED)

THE BASIS OF BEARINGS OF THIS SURVEY IS THE LINE BETWEEN THE FOUND MONUMENTS AS SHOWN AND DESCRIBED HEREON, THE LINE BETWEEN THE FOUND PIN/CAP MARKING THE SW CORNER OF MILL SITE NO.10 AND THE FOUND PIN/CAP MARKING THE NE CORNER OF MILL SITE NO.10, IS ASSUMED TO BEAR N 35°50'10" E AND MEASURES 540.66 FEET.

LEGAL DESCRIPTION:
per MOUNTAIN LAND TITLE, LLC ORDER
NO. MLT2020-4392 DATED 9-9-20

PARCEL A:
MILL SITE 10, AS DESCRIBED IN MAYOR'S DEED RECORDED SEPTEMBER 26, 1873, IN BOOK 56, PAGE 138, CITY OF BLACK HAWK,
EXCEPT ANY PORTION LYING WITHIN HIGHWAY NO. 119,
AND EXCEPT THAT PORTION, IF ANY, CONVEYED IN QUIT CLAIM DEED RECORDED JUNE 1, 2012, RECEPTION NO. 146528,
AND EXCEPT ANY MINE OF GOLD, SILVER, CINNABAR OR COPPER OR TO ANY VALID MINING CLAIM OR POSSESSION HELD UNDER EXISTING LAWS,
AS SHOWN IN PATENT TO THE CITY OF BLACK HAWK, RECORDED IN BOOK 56 AT PAGE 555 AND IN BOOK 62 AT PAGE 456, COUNTY OF GILPIN, STATE OF COLORADO.

PARCEL B:
MILL SITE 11, AS DESCRIBED IN MAYOR'S DEED RECORDED NOVEMBER 19, 1873, IN BOOK 56, PAGE 296, CITY OF BLACK HAWK,
EXCEPT ANY PORTION LYING WITHIN HIGHWAY NO. 119,
AND EXCEPTING THE EASTERLY 70 FEET THEREOF,
AND EXCEPT THAT PORTION, IF ANY, CONVEYED IN QUIT CLAIM DEED RECORDED JUNE 1, 2012, RECEPTION NO. 146528,
AND EXCEPT ANY MINE OF GOLD, SILVER, CINNABAR OR COPPER OR TO ANY VALID MINING CLAIM OR POSSESSION HELD UNDER EXISTING LAWS,
AS SHOWN IN PATENT TO THE CITY OF BLACK HAWK, RECORDED IN BOOK 56 AT PAGE 555 AND IN BOOK 62 AT PAGE 456, COUNTY OF GILPIN, STATE OF COLORADO.

MAYOR'S CERTIFICATE:
THE FOREGOING AMENDMENT IS APPROVED FOR FILING AND ACCEPTED BY THE BOARD OF ALDERMEN OF THE CITY OF BLACK HAWK, COLORADO, THIS_____DAY OF,_____,2020

_____ *ATTEST:_____*
DAVID D. SPELLMAN, MAYOR *MELISSA A. GREINER, CMC, CITY CLERK*

CLERK AND RECORDER'S CERTIFICATE:
ACCEPTING FOR FILING IN THE OFFICE OF THE COUNTY CLERK AND RECORDER OF GILPIN COUNTY AT CENTRAL CITY, COLORADO, THIS_____ DAY OF_____, 2020.

_____
COUNTY CLERK AND RECORDER

_____
BY: DEPUTY CLERK

Tripod Geometrics Surveying LLC
Peter M. Palombo PLS
3604 Swan Lane
Fort Collins, CO 80524
PLS 33197 Bus: (720) 849-7509
peterpalombo@aol.com

Proj.# DWG.:	*DATE OF PREPARATION:*	
ms_10_11_GoldGilp_fin_plat_11_11_20.dwg	*11-11-20*	*1 OF 1*

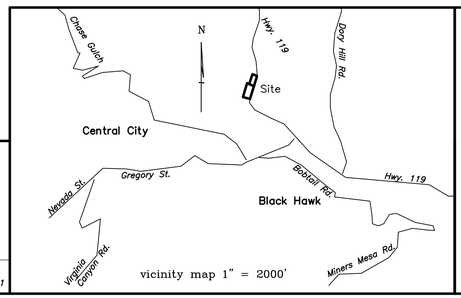

FOR CLERK AND RECORDER USE ONLY

RESOLUTION 2-2021

A RESOLUTION APPROVING A CERTIFICATE OF ARCHITECTURAL COMPATIBILITY FOR THE GRAND STAIRCASE LOCATED AT 251 GREGORY STREET

STATE OF COLORADO
COUNTY OF GILPIN
CITY OF BLACK HAWK

Resolution No. 2-2021

TITLE: A RESOLUTION APPROVING A CERTIFICATE OF ARCHITECTURAL COMPATIBILITY FOR THE GRAND STAIRCASE LOCATED AT 251 GREGORY STREET

NOW, THEREFORE, BE IT RESOLVED BY THE CITY COUNCIL OF THE CITY OF BLACK HAWK, COLORADO, THAT:

Section 1. The City Council hereby determines to approve the Certificate of Architectural Compatibility for the Grand Staircase located at 251 Gregory Street, subject to the following conditions:

A. All proposed renovations shall match the plans submitted; and

B. All applicable building and electrical permits must be obtained prior to beginning construction.

RESOLVED AND PASSED this 13th day of January, 2021.

_____
David D. Spellman, Mayor

ATTEST:

_____
Melissa A. Greiner, CMC, City Clerk

NOTICE OF PUBLIC HEARING

Notice is hereby given that the City of Black Hawk Board of Aldermen shall hold a public hearing concerning a request for a Certificate of Architectural Compatibility for the construction of the Gregory Street Grand Staircase on property described in Exhibit A and generally located at 251 Gregory Street, Black Hawk, Colorado, pursuant to the City of Black Hawk zoning ordinance.

The public hearing is to be held before the City of Black Hawk Board of Aldermen on Wednesday, January 13, 2021, at 3:00 p.m. or as soon as possible thereafter. The City of Black Hawk is hosting virtual City Council meetings via Zoom in response to the Coronavirus COVID-19 until further notice. There are no physical meetings at this time. This meeting will accommodate public engagement via a Zoom URL and/or phone number to join. Please go to the City of Black Hawk's website for further instructions prior to the meeting.

ALL INTERESTED PARTIES MAY ATTEND

Melissa A. Greiner, CMC
City Clerk

EXHIBIT A

A PORTION OF BLOCK 27, LOT 1 THRU LOT 7, CITY OF BLACK HAWK, AND A PORTION OF ADJACENT GREGORY STREET RIGHT-OF-WAY.

CITY OF BLACK HAWK
REQUEST FOR COUNCIL ACTION

SUBJECT: Certificate of Architectural Compatibility for the Grand Staircase located at 251 Gregory Street.

RECOMMENDATION: Staff recommends the following motion to the Mayor and Board of Aldermen:

MOTION TO CONDITIONALLY APPROVE Resolution No. 2-2021, a Resolution approving a Certificate of Architectural Compatibility for construction of the Grand Staircase located at 251 Gregory Street with the following conditions:

1. All proposed renovations shall match the plans submitted; and
2. All applicable building and electrical permits must be obtained prior to beginning construction.

SUMMARY AND BACKGROUND OF SUBJECT MATTER:
The City of Black Hawk has received an application from BSC Signs requesting review and approval of a Certificate of Architectural Compatibility for the construction of the Grand Staircase located on Gregory Street. The City, in conjunction with PEH Architects and BSC Signs has developed plans for the Gregory Street HARD District pedestrian plaza. The Grand Staircase will serve as the eastern entryway to the plaza which is currently under construction. The project also includes a sidewalk, lighting and signage. Refer to the Staff Report included with this Request for Council Action.

AGENDA DATE:	January 13, 2021
WORKSHOP DATE:	N/A
FUNDING SOURCE:	N/A
DEPARTMENT DIRECTOR APPROVAL:	[X]Yes [ ]No
STAFF PERSON RESPONSIBLE:	Cynthia L. Linker CP&D Director
DOCUMENTS ATTACHED:	Resolution 2-2021 Staff Report & Attachments
RECORD:	[ ]Yes [X]No
CITY ATTORNEY REVIEW:	[ ]Yes [X]N/A

SUBMITTED BY:

Cynthia L. Linker, CP&D Director

Vincent Harris, AICP, Baseline Corporation

REVIEWED BY:

Stephen N. Cole, City Manager

Staff Report

CITY OF BLACK HAWK
PLANNING / LAND USE

Date prepared: December 29, 2020
Meeting Date: January 13, 2021

STAFF REPORT:	**Certificate of Architectural Compatibility: Grand Staircase**
For:	City Council
Project:	P-20-26 Gregory Street Grand Staircase COAC
Property Address:	251 Gregory Street, Black Hawk, CO 80422
Applicants:	Angela Renfro – BSC Signs
	Matt Reed – City of Black Hawk Public Works
Zoning:	History Appreciation Recreation Destination (HARD)
Prepared by:	Julie Esterl - Baseline Corporation
Approved by:	Vincent Harris, AICP - Baseline Corporation
Reviewed by:	Cynthia Linker, CP&D Director

BACKGROUND:

On November 16, 2020, Angela Renfro of BSC Signs, submitted an application request on behalf of the City of Black Hawk for a Certificate of Architectural Compatibility (COAC) for the construction of the Gregory Street Grand Staircase to be located at 251 Gregory Street. The City, in conjunction with PEH Architects and BSC Signs has developed plans for the Gregory Street HARD District pedestrian plaza. The Grand Staircase will serve as the eastern entryway to the plaza which is currently under construction.

Figure 1: Location Map

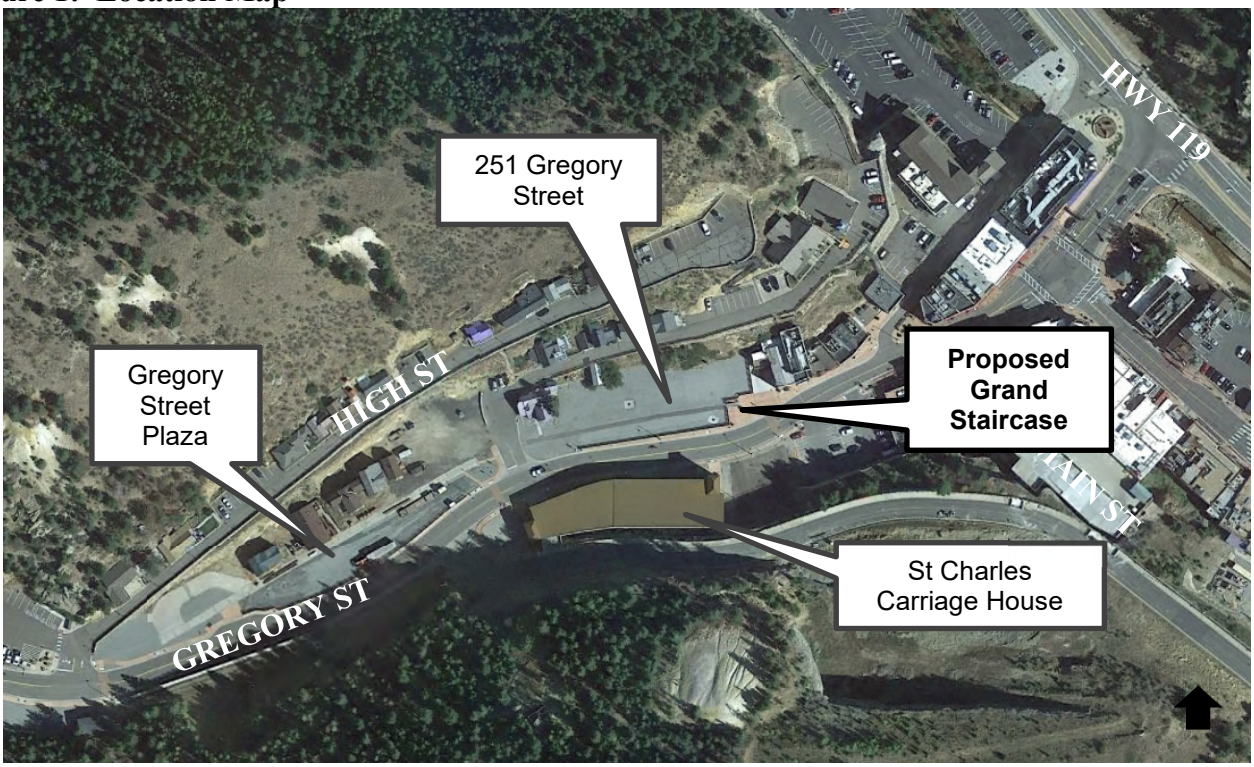

ZONING:
The property is zoned History Appreciation Recreation Destination (HARD) which allows public pedestrian malls. The Grand Staircase is being developed in conjunction with the Gregroy Street pedistrian mall and is an allowed use.

Figure 2: Zoning Map

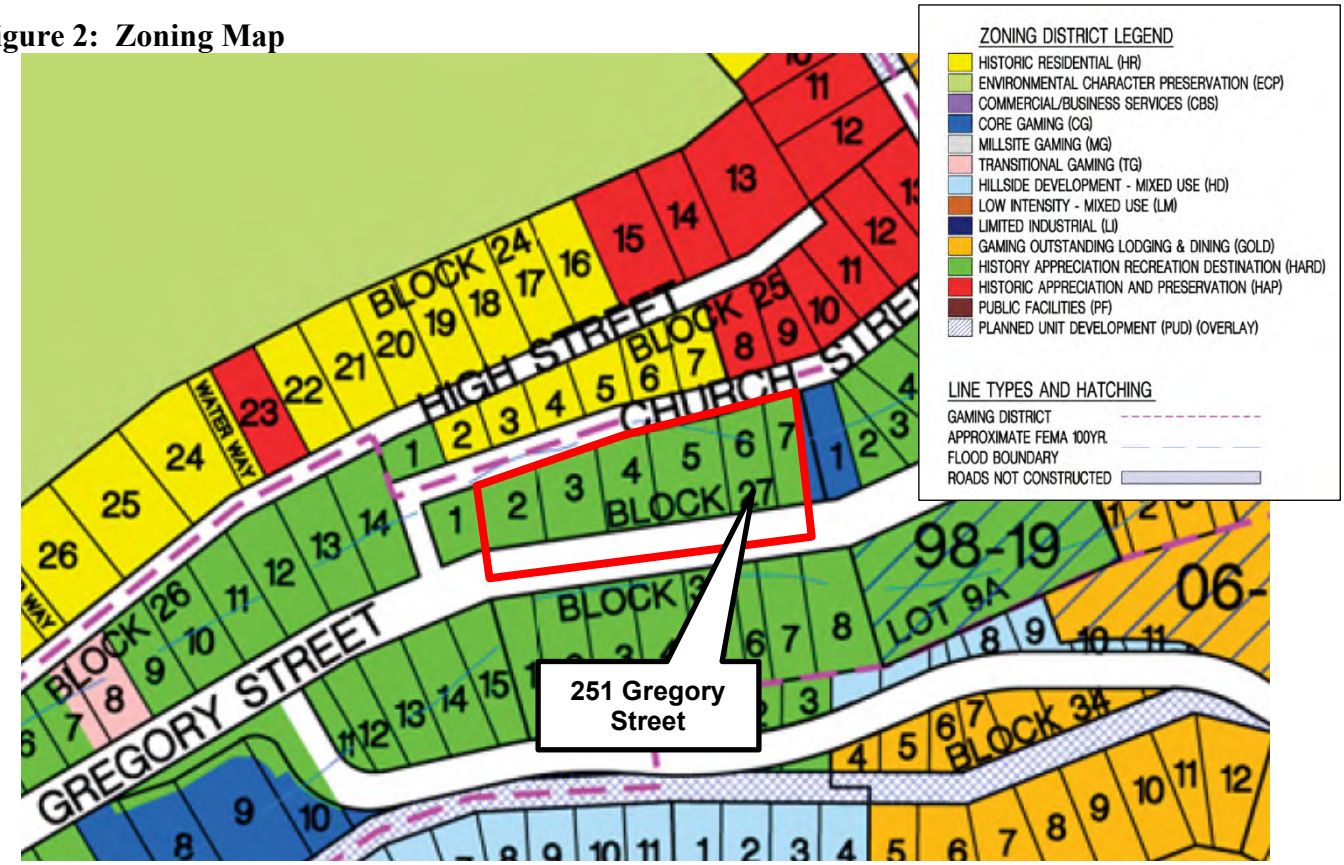

REQUEST:
The proposed construction of the Grand Staircase includes the replacement of the existing galvanized 4-foot wide stairway with a new 10-foot wide ornamental stair. The stairway will connect the public walkway on the east to an undeveloped lot on the west. Development of the lot is undetermined, but would ideally serve restaurant and retail spaces. The stair features open grate treads and landing to reduce winter time snow maintenance.

A large welcome sign with custom lamps is included as part of the entry to the bottom and top of the stair. Landscape and hardscape improvements at the bottom of the stair will create a comfortable resting area.

In addition to the stair, the request includes the replacement of the existing 4-foot wide asphalt walk that exists across the undeveloped lot with a new 6-foot wide meandering colored concrete sidewalk. Pedestrian lighting is also proposed along the new sidewalk.

Figure 3: Gregory Street Plaza

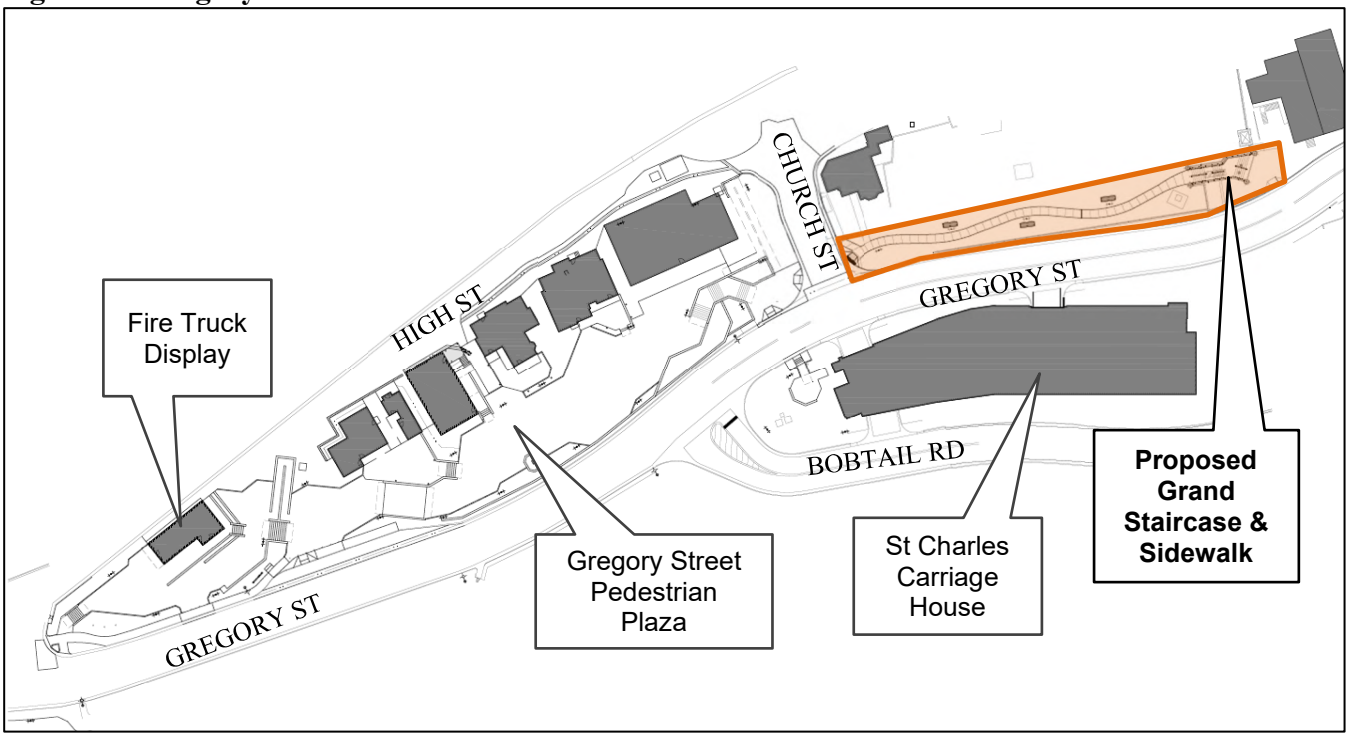

Figure 4: Grand Staircase Site Plan

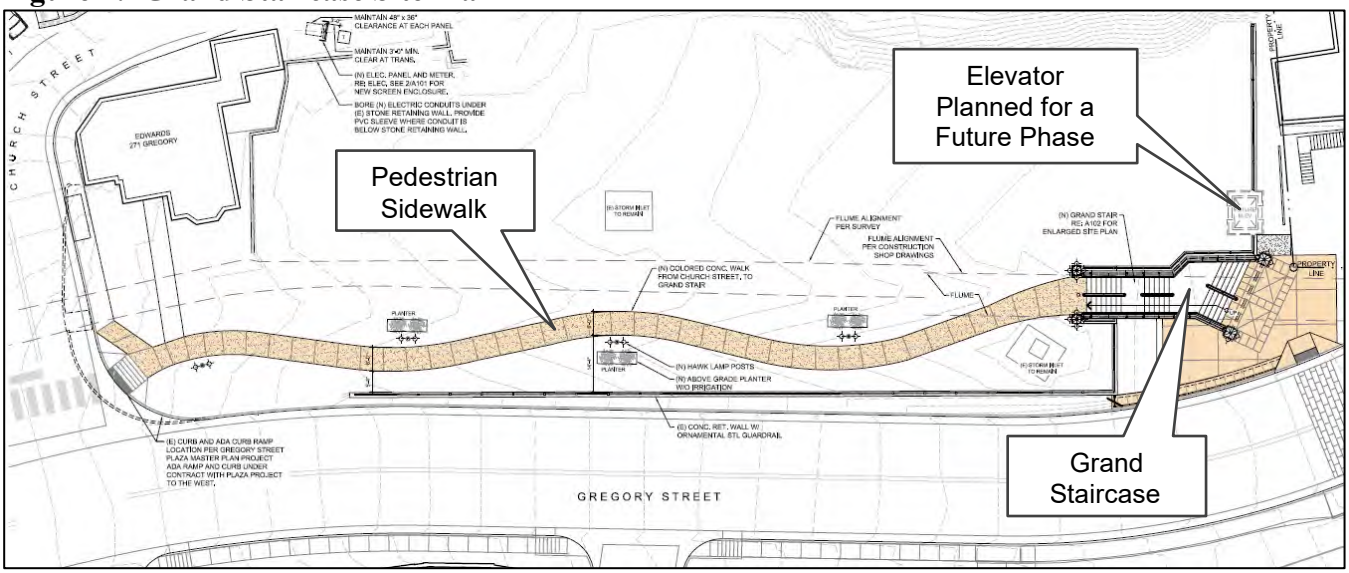

Figure 5: Grand Staircase Enlarged Site Plan

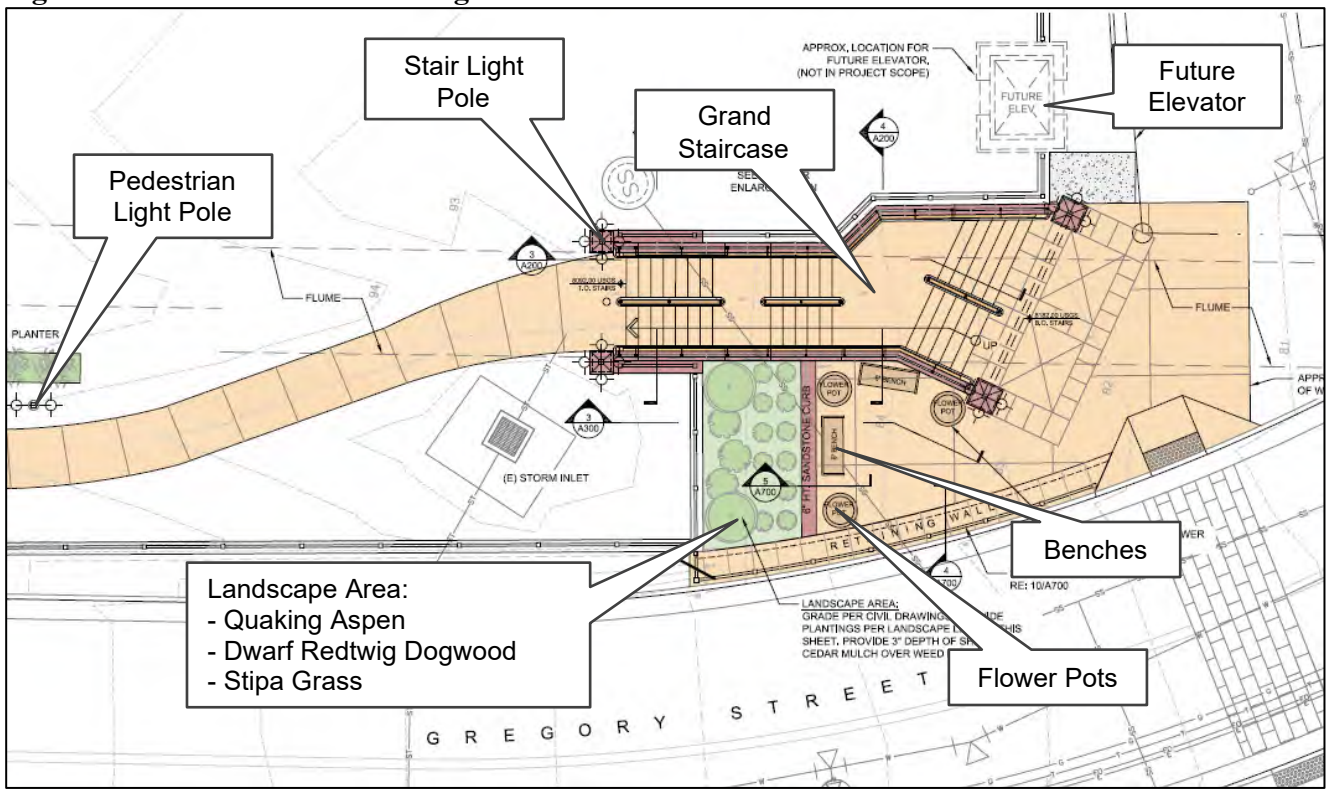

Figure 6: Existing 4' Wide Stair

Figure 7: Proposed 10' Wide Grand Staircase

Figure 8: Proposed Grand Staircase at Night

Figure 9: Proposed Pedestrian Light Fixture

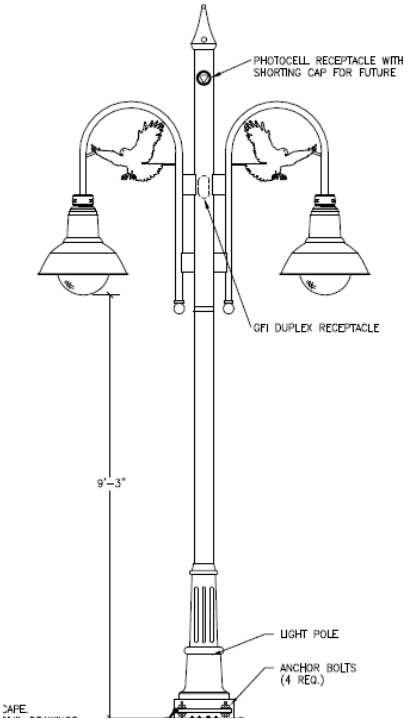

Figure 10: Proposed Stair Light Fixture

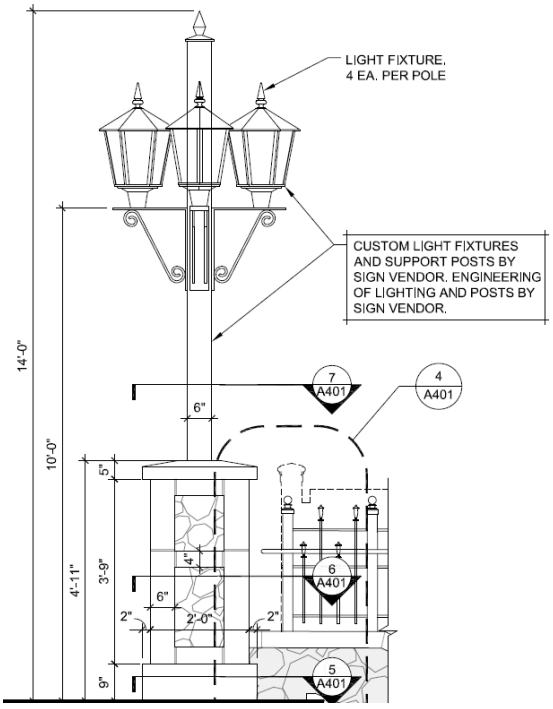

Applicable City of Black Hawk Regulations

Excerpts from:

City of Black Hawk
Zoning Code
Chapter 15 – Sign Code

Section 15-11. *Sign Permit.*

(e) Exemptions. Signs located on City of Black Hawk property such as City buildings used for a governmental purpose, City of Black Hawk installations of integrated signage, stand-alone City monuments, sculptures, historic tourism and related governmental signage, and signs on City trails and other signs located on City property used for a governmental purpose shall not require review and approval in accordance with this Chapter. In the case of such signs, review and approval shall be performed in accordance with Sec. 16-368. - City Council design review and compatibility process.

Staff Comment: The signs included with this Certificate of Architectural Compatibility (COAC) request may be reviewed and approved with the COAC process and do not require a Comprehensive Sign Plan (CSP) as outlined in Chapter 15 of the Municipal Code. Therefore, a CSP has not been prepared.

Excerpts from:

City of Black Hawk
Zoning Code
Chapter 16 – Zoning

Section 16-368. (a) (3) *Any person seeking to modify the exterior of, add to, or construct a new building shall be subject to the following procedures. Any such renovation, construction or demolition shall be subject to the City's design standards.*

Section 16-368. (a) (5) *The City shall not issue a building permit or site development plan for any of the following activities until a Certificate of Architectural Compatibility ("COAC") has been issued for the project.*

a. *Construction of a new building, structure or improvement;*

b. *Alteration or reconstruction of, or addition to, the exterior of any improvement;*

c. *Demolition of any improvement;*

d. *Construction or erection of or addition to any improvement upon any land located within the City; or*

e. *Excavations requiring an excavation permit.*

Section 16-368. (e) (3) *Except for applications seeking a COAC for demolition of a structure, which review is controlled by the criteria in subsection (4) below, in considering the issuance of a COAC, the City shall consider the following:*

a. *All plans, drawings and photographs as may be submitted by the applicant;*
Staff Comment: The applicant has submitted plans that are included with this Staff Report. See the applicant's submittal attached with this staff report for reference.

b. *If a public hearing is required, any information presented at a public hearing held concerning the proposed work;*
Staff Comment: Representative from both BSC Signs and the City of Black Hawk will be present at the City Council meeting to provide additional information as necessary.

c. *The purpose of this Chapter;*
Staff Comment: The purpose of this chapter is to ensure that the renovations meet the zoning requirements of the City of Black Hawk. The property is zoned History Appreciation Recreation Destination (HARD). The proposed pedestrian mall and associated Grand Staircase are permitted within the HARD district.

d. *Compliance with this Code and the payment of all fees required by this Code;*
Staff Comment: The applicants have and will continue to pay all necessary fees required by the ordinances of the City.

e. *The effects of the proposed work upon the protection, enhancement, perpetuation and use of the City which cause it to possess a special character or special historical or aesthetic interest or value; and*
Staff Comment: The architecture of the Grand Staircase fits in with the historic character of the City. The proposed construction will benefit the historic and aesthetic interest of the site. All proposed colors are consistent with the approved historic color palette for the City of Black Hawk.

f. *Compliance with the City's residential or commercial design standards, as appropriate, including, but not limited to, reference to the historical and architectural style, the general design, arrangement, texture, materials and color of the development, building or structure in question or its appurtenance fixtures; the relationship of such features to similar features of the other buildings within the City the position of the building, structure, park or open space in relation to public rights-of-way and to other buildings and structures in the City.*
Staff Comment: The Grand Staircase is new construction, and therefore has been reviewed against the Commercial Design Guidelines for new project design, site design, stairs and ramps, exterior lighting, and signage.

PEH Architects prepared the proposed new construction plans submitted with the application and included with this staff report. Staff views that these plans submitted by the applicant are consistent with the Commercial Design Guidelines for new construction.

Excerpts from:

City of Black Hawk
Commercial Design Guidelines

3.A.VII *- New Project Design for Gaming and Entertainment Districts:*
The objectives of the three gaming and entertainment zoning districts is to encourage the sustained economic viability of the community by allowing gaming and entertainment and encouraging a complimentary mix of retail, services, restaurants and lodging accommodations in a manner which preserves and enhances the historical buildings, structures and features of these areas and the prominence of mining in the City's early history. This is accomplished by encouraging restoration and preservation of the existing historic commercial, mill and residential style buildings and structures, while allowing for the development of complementary new buildings and structures of consistent architecture and character. A safe, pedestrian oriented environment with transportation features that minimize vehicular traffic and visual impact on the historical character of the area is encouraged, as is minimization of noise and traffic impacts of gaming and related activities on nearby residential neighborhoods.
Staff Comment: The proposed Grand Staircase has been designed to be consistent in architecture and character of the City's early mining history. The Grand Staircase will provide access to a safe, pedestrian oriented environment that will provide a complimentary mix of retail, services and restaurants within the Gregory Street HARD district.

4.N. *- Site Design for Pedestrian Ways:*
The development of safe, attractive pedestrian ways is a high priority for Black Hawk, and shall be incorporated into all development projects to promote pedestrian activity and to minimize dependence on vehicles.
Staff Comment: PEH Architects worked with City of Black Hawk staff to design a safe, attractive and high quality pedestrian way that will promote pedestrian activity.

5.C.XII. *- Stairs and Ramps:*
e) Ramps must be provided on accessible commercial entrances, and auto operators are highly recommended on gaming establishments because of the elderly population.
Staff Comment: While not ramp is planned with this phase of the project, an elevator is planned for a future phase.

5.C.XVII. *- Exterior Lighting:*
a) iii. The emphasis in lighting shall be at the street level, to encourage a pedestrian oriented environment.
b) i. Use lamp fixtures that are simple in character and are compatible with the building (or site) *design.*
c) v. At the pedestrian level, use a lamp color that complements pedestrian activity.
Staff Comment: The exterior lighting proposed for the Grand Staircase and associated sidewalk are pedestrian oriented, simple in character and are consistent with the design of the Gregory Street HARD district.

5.C.XVIII. *- Signage:*
b) In historic districts, be sensitive to historic signage forms. Refer to historic photographs for reference on sign types and period signage lettering.
c) Signage may be illuminated by bulb lighting, directed lighting, or from the interior.
Staff Comment: PEH Architects and BSC Signs worked together with the City of Black Hawk staff to design signage that is consistent with the Gregory Street Plaza project, and the City's early mining history.

STAFF SUMMARY:

Staff from Baseline Corporation has evaluated the information provided by BSC Signs and City of Black Hawk staff for this project. The City of Black Hawk Municipal Code allows for new construction with the approval of a Certificate of Architectural Compatibility (COAC). Staff from Baseline Corporation recommends that a Certificate of Architectural Compatibility be granted. The proposed construction of the Grand Staircase is acceptable and consistent with the Design Guidelines for commercial uses within the City adopted by the City of Black Hawk.

In summary, Staff recommends that a Certificate of Architectural Compatibility for construction of the Grand Staircase to be located at 251 Gregory Street be granted, subject to the following conditions:

1. All proposed renovations shall match the plans submitted; and
2. All applicable building and electrical permits must be obtained prior to beginning construction.

FINDINGS:

City Council may *approve, conditionally approve, or deny* a Certificate of Architectural Compatibility. To support this proposal, the following findings can be used:

The proposed construction of the Grand Staircase located at 251 Gregory Street meets the intent of the criteria outlined in Section 16-368 of the Municipal Code and those found in Black Hawk's Commercial Design Guidelines as noted and evaluated in the staff report presented to City Council.

RECOMMENDATION:

Staff recommends the following motion to the Mayor and Board of Aldermen:

MOTION TO CONDITIONALLY APPROVE Resolution No. 2-2021, a Resolution approving a Certificate of Architectural Compatibility for construction of the Grand Staircase located at 251 Gregory Street with the following conditions:

1. All proposed renovations shall match the plans submitted; and
2. All applicable building and electrical permits must be obtained prior to beginning construction.

ATTACHMENTS:

- Combined Application

Applicant's Submittal

PRE-LAND USE APPLICATION

City of Black Hawk
Community Planning and Development
211 Church Street, P.O. Box 68, Black Hawk, CO 80422
Email: CPDinquiry@cityofblackhawk.org • Visit: www.cityofblackhawk.org

COMPLETE ALL BOXES – Incomplete applications will not be processed

Applicant Name: **Angela Renfro**	Applicant Address & Zip Code: **7245 W. 116th Pl. broomfield, CO 80020**
Applicant Phone: **303-464-0644**	Applicant Email: **angelar@bscsigns.com**
Property Owner Name: **City of Black Hawk**	Property Owner Address & Zip Code: **201 Selak St. Black Hawk, CO 80422**
Property Owner Phone: **303-582-5221**	Property Owner Email: **cityofblackhawk.org**
Project Name: **Grand Staircase Sign & Light Posts**	Project Description: **Install Grand Staircase sign & light posts**
Project Address or Location: **251 Gregory St. Black Hawk, CO 80422**	Project Parcel Number: **R004025**
Existing Subdivision, Lot & Block: **Black Hawk Plaza**	Existing Planned Unit Development:
Existing Property Size: ☐ Acres ☐ Sq. Ft. **253,180**	Existing Building Size in square feet: **16334.0000 sq ft**
Existing Zoning: **HARD**	Proposed Zoning: **HARD**
Existing Use: **Black Hawk Commercial**	Proposed Use: **Black Hawk Plaza**

ITEMS REQUIRED WITH PRE-LAND USE APPLICATION SUBMITTAL:

■ This completed & signed Pre-Land Use Application form
■ Authorization Letter from Owner (Only needed if applicant is not the owner)
■ Cover Letter ■ Graphic(s) ■ Plot Plan ■ Pre-Land Use Application Deposit Receipt

APPLICATION AND FEE AGREEMENT:

The Black Hawk Adopted Fee Schedule and Section 16-370 of the Black Hawk Municipal Code establishes the requirement for applicants to pay fees to cover the costs the City may incur by having City approved consultants evaluate and process applications.

I, as the applicant, hereby certify that I believe to the best of my knowledge that all information supplied with this application is true and accurate. I understand that the Pre-Land Use Application will require the submittal of a deposit. Pre-Land Use Application deposits are calculated as follows:

☐ Non-residential/Commercial buildings less than 1,000 sq. ft. = $350 deposit
☐ Non-residential/Commercial buildings between 1,001 – 5,000 sq. ft. = $550 deposit
☐ Non-residential/Commercial buildings more than 5,000 sq. ft. and all vacant land = $1,050 deposit

I understand that if Pre-Land Use Application costs exceed the deposit collected, the City will invoice me, as the applicant, for the additional consultant cost plus a 15% administrative fee. I additionally agree that I am not acquiring any rights by virtue of the payment of the City's expenses.

Deposits may be paid online at https://www.govpaynow.com/gps/user/plc/8706
Submit Pre-Land Use Applications and required submittal items to: cpdinquiry@cityofblackhawk.org

Applicant's Signature Angela Renfro Digitally signed by Angela Renfro Date: 2020.11.16 09:35:52 -07'00' Date _____

FOR CITY USE ONLY: Received by: Date:

11/16/2020

City of Black Hawk
Community Planning and Development
211 Church St.
P.O. Box 68
Black Hawk, CO 80422

Pre-Land Use Application: Grand Staircase Sign & Light Posts

Job Site Address: 251 Gregory St. Black Hawk, CO 80422

To Black Hawk Planning Staff:

We would like to submit the Pre-Land Use Application for the new Grand Staircase sign and light posts project located at 251 Gregory St. Black Hawk, CO 80422. We plan to fabricate and install an architectural archway sign with light posts. All elements of the project will mimic existing historical fixtures.

Included with this submittal are the following: application, plot plan, graphics and a deposit. Please let us know if you need anything else for this review.

Thank you,

Judy Cruz

Judy Cruz
BSC Signs

2020 | HISTORIC GREGORY STREET GRAND STAIRCASE SHOP REV4

BLACK HAWK

PRESENTED BY

bscsigns

BSC CUSTOM
ARCHITECTURAL • LIGHTING

BLACK HAWK COLORADO

GRAND STAIRCASE - SIGNAGE - EXPLODED VIEW

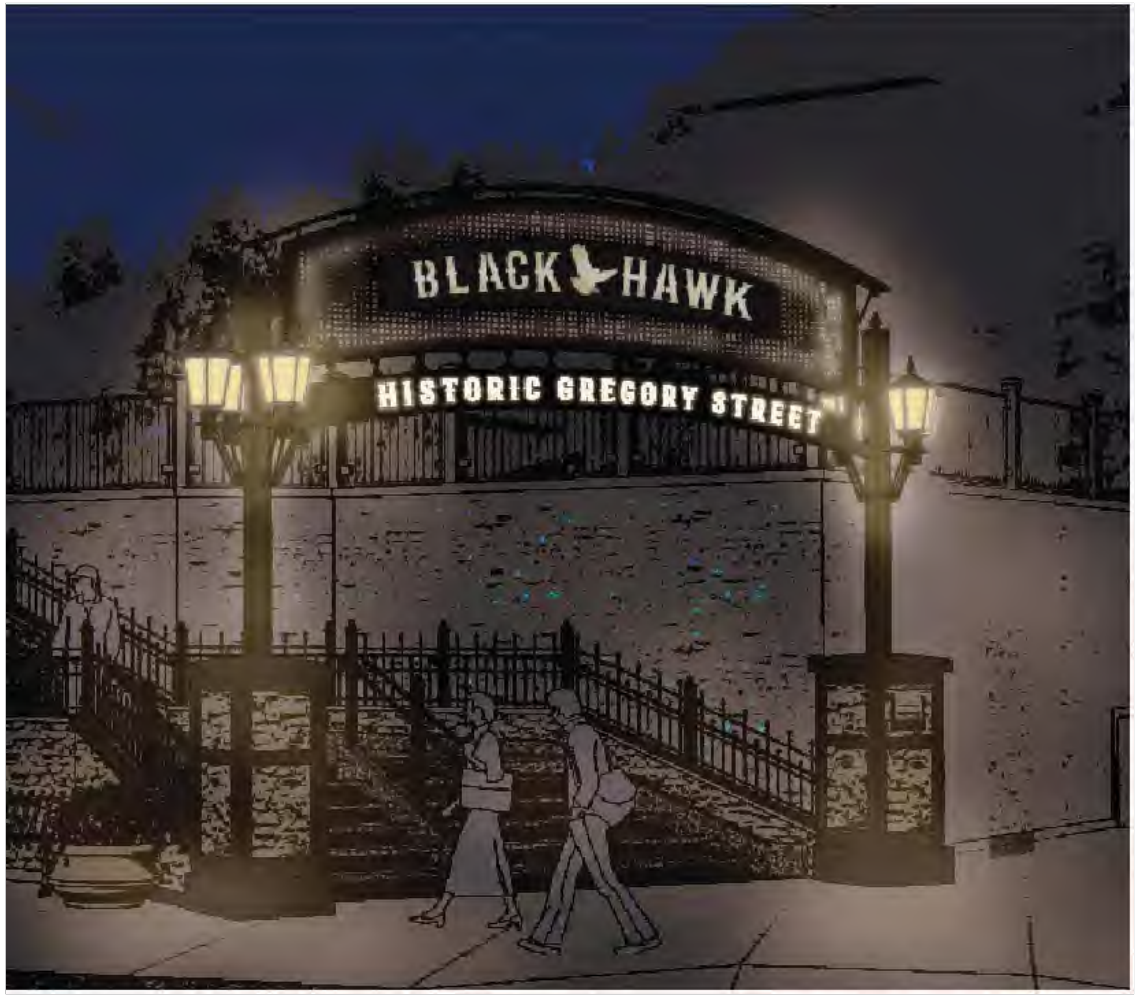

PROPOSED - APPROXIMATE RELATIVE SCALE

bscsigns
BSC CUSTOM ARCHITECTURAL + LIGHTING
7245 W. 116th Pl. Broomfield, CO 80020
303.464.0644
www.bscsigns.com www.bscustom.com

141 of 297

CLIENT NAME: GRAND STAIR
ADDRESS: GREGORY STREET
CITY / STATE / ZIP: BLACK HAWK COLORADO

SALES EXECUTIVE: ANGELA RENFRO
DESIGNER: CHRIS CARPENTER
ORIGINAL DATE: 03.11.2020

ARTWORK PHASE
X SHOP
REVISION #4
FINAL ARTWORK

REVISIONS

	DATE	REVISION	DESIGNER
1	03.18.2020	REVISED ART TO MATCH PEH MARK UPS	XX
2	04.22.2020	CHANGED MATERIAL AND LIGHT FIXTURE	
3	06.01.2020	CHANGED POLE SPACING AND ADDED SCROLLS	
4	06.10.2020	MOVED MOUNTING PLATE 6" BELOW GRADE	
5			
6			
7			
8			
9			
10			

CLIENT APPROVAL

Client Signature / Date:

Landlord Signature / Date:

SHEET 2 OF 4

FILE LOCATION PATH:
Y:\2020 Customer Art\PEH Architects\Grand Stair - Black Hawk\Sign Design\Concepts\DSGN_GrandStair_BlackHawk_PEH_Shop4_061020

BLACK HAWK COLORADO

GRAND STAIRCASE - SIGNAGE - EXPLODED VIEW

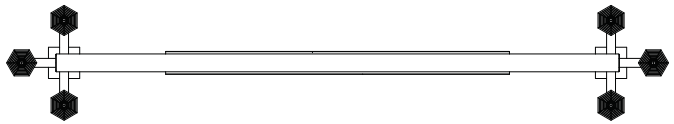

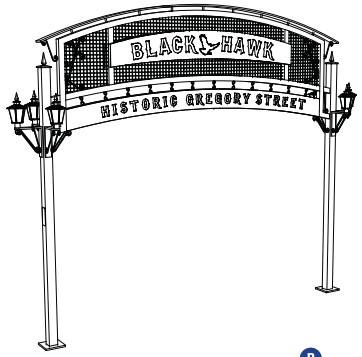

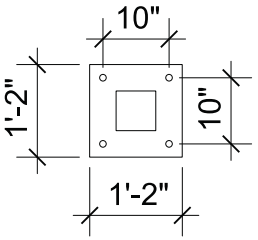

MOUNTING PLATE DETAIL
N.T.S

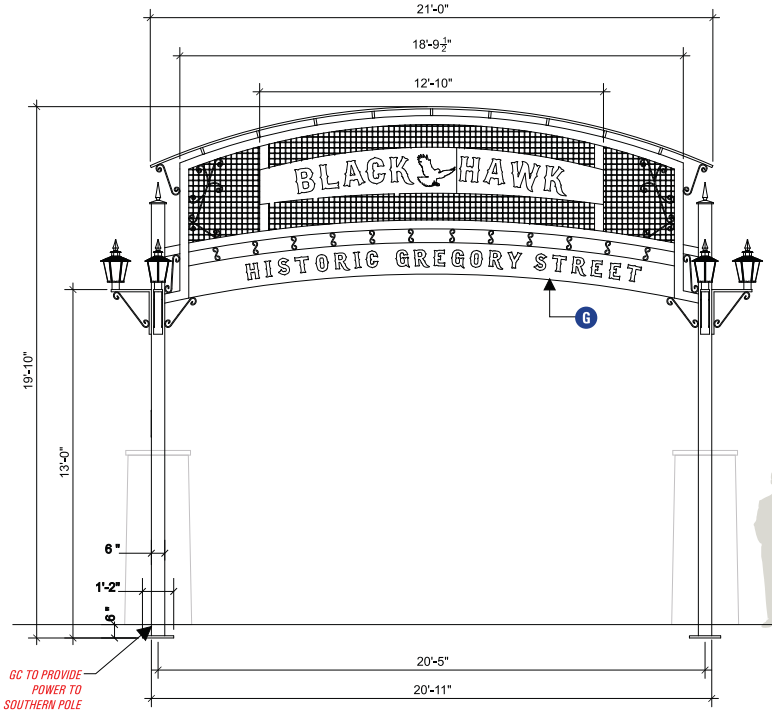

FRONT VIEW QTY(1 D/F)

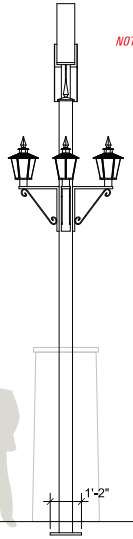

SIDE VIEW

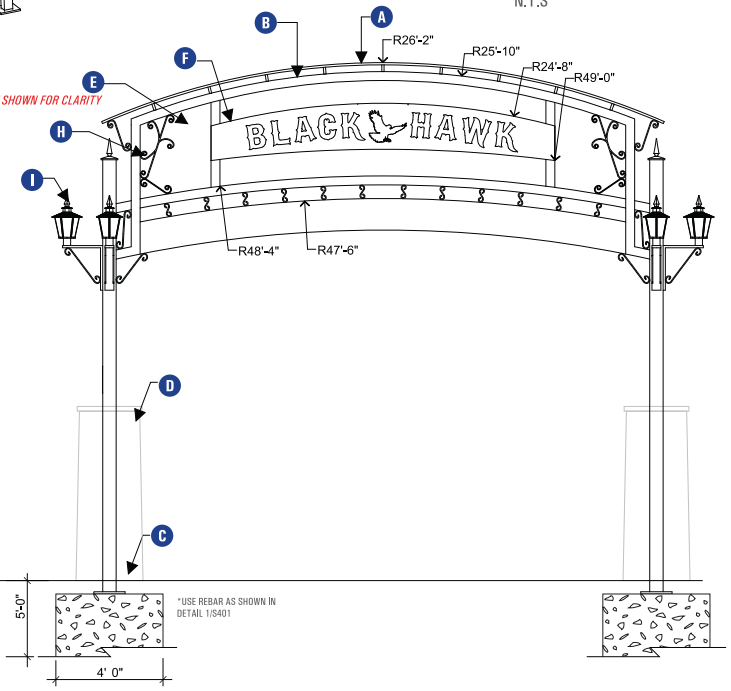

REAR VIEW

SCOPE OF WORK

MANUFACTURE & INSTALL NEW D/F GRANDSTAIR SIGN

TECH SURVEY REQUIRED PRIOR TO PRODUCTION

SIGN SPECIFICATIONS

A TOP BAR
1" THICK STEEL PLATE ROLLED AND ATTACHED TO FRAME WITH 1" DIA X 3" LONG SPACERS

B SIGN FRAME
4" STEEL SQ TUBE ROLLED TO VARIOUS RADII WELDED TO 6" STEEL SQ UPRIGHTS WITH STEEL MOUNTING PLATES AND 8" CAST ALUM FINIAL TO MATCH SMALLER FINIAL WITH A 6" POST CAP

C MOUNTING
1"X14"X14" STEEL MOUNTING PLATES ARE TO BOLT TO 3/4" HILTI KWIK BOLT TZ 4-3/4" IMBEDDED IN 4' DIA x 5' DEEP CAISSONS WITH REBAR

D CMU COVERS
6' 6" TALL CMU COVERS WITH STONE VENEER TO COVER MOUNTING BY OTHERS

E WIRE MESH
2"x2" OPENING x .187" THICK WELDED STEEL MESH, TO BE MADE FROM MULTIPLE SHEETS AND SEAMED

F REVERSE ROUTED AND BACKED CABINET
2106" 3" DEEP CABINET MADE FROM ALUM ANGLE WITH A REVERSE ROUTED FACE BACKED BY CLEAR ACRYLIC, TO BE PERIMETER ILLUMINATED WITH 3000K-3600k WARM WHITE LEDS TO BE ATTACHED TO THE ALUM FRAME

G REVERSE ROUTED AND BACKED CABINET
1236" 4" DEEP SINGLE SIDED CABINET MADE FROM STEEL ANGLE WITH A REVERSE CUT FACE BACKED BY 7328 WHITE ACRYLIC TO BE INTERNALLY ILLUMINATED WITH 3000K-3600k WARM WHITE LEDS TO BE ATTACHED TO THE SIGN FRAME

H SCROLLS
SCROLLS ARE TO BE HAND BENT FROM 3/8" STEEL SQ BAR AND BE WELDED TO THE FRAME

I CUSTOM LIGHT ASSEMBLY
LIGHT ASSEMBLY IS TO ATTACH TO THE POLE WITH VISIBLE TAMPER PROOF BUTTON HEAD HARDWARE SEE DSGN_GrandStair_BlackHawk_LightPole_Shop_031120.PDF PAGE FOR MORE DETAILS

-ALL HARD EDGES ARE TO BE ROUNDED OVER BY 1/16"

COLOR KEY

P1 TBD - MATTE

bscsigns
BSC CUSTOM ARCHITECTURAL + LIGHTING
7245 W. 116th Pl. Broomfield, CO 80020
303.464.0644
www.bscsigns.com www.bcscustom.com

CLIENT NAME: GRAND STAIR
ADDRESS: GREGORY STREET
CITY / STATE / ZIP: BLACK HAWK COLORADO

SALES EXECUTIVE: ANGELA RENFRO
DESIGNER: CHRIS CARPENTER
ORIGINAL DATE: 03.11.2020

ARTWORK PHASE
X SHOP
REVISION #4
FINAL ARTWORK

REVISIONS:

	DATE	REVISION	DESIGNER
1	03.18.2020	REVISED ART TO MATCH PEH MARK UPS	CC
2	04.22.2020	CHANGED MATERIAL AND LIGHT FIXTURE	
3	06.01.2020	CHANGED POLE SPACING AND ADDED SCROLL	
4	06.10.2020	MOVED MOUNTING PLATE 6" BELOW GRADE	
5			
6			
7			
8			
9			
10			

CLIENT APPROVAL

Client Signature / Date:

Landlord Signature / Date:

SHEET 3 OF 4

FILE LOCATION PATH:
Y:\2020 Customer Art\PEH Architects\Grand Stair - Black Hawk\Sign Design\Concepts\DSGN_GrandStair_BlackHawk_PEH_Shop4_061020

BLACK HAWK COLORADO

GRAND STAIRCASE - SIGNAGE - EXPLODED VIEW

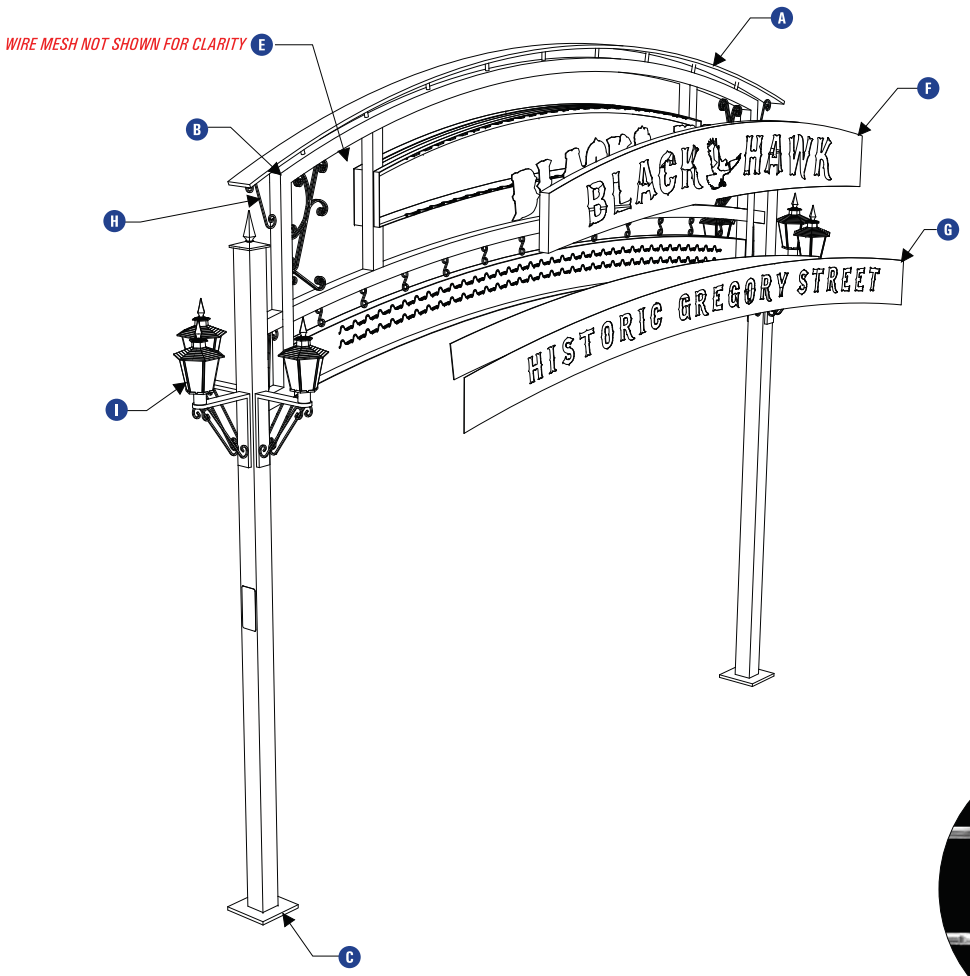

SCOPE OF WORK

MANUFACTURE & INSTALL NEW D/F GRANDSTAIR SIGN

TECH SURVEY REQUIRED PRIOR TO PRODUCTION

SIGN SPECIFICATIONS

A TOP BAR
1" THICK STEEL PLATE ROLLED AND ATTACHED TO FRAME WITH 1" DIA X 3" LONG SPACERS

B SIGN FRAME
4" STEEL SQ TUBE ROLLED TO VARIOUS RADII WELDED TO 6" STEEL SQ UPRIGHTS WITH STEEL MOUNTING PLATES AND 8" CAST ALUM FINIAL TO MATCH SMALLER FINIAL WITH A 6" POST CAP

C MOUNTING
1"X14"X14" STEEL MOUNTING PLATES ARE TO BOLT TO 3/4" HILTI KWIK BOLT TZ 4-3/4" IMBEDDED IN 4' DIA x 5' DEEP CAISSONS WITH REBAR

D CMU COVERS
6' 6" TALL CMU COVERS WITH STONE VENEER TO COVER MOUNTING BY OTHERS

E WIRE MESH
2"x2" OPENING x .187" THICK WELDED STEEL MESH, TO BE MADE FROM MULTIPLE SHEETS AND SEAMED

F REVERSE ROUTED AND BACKED CABINET
2106" 3" DEEP CABINET MADE FROM ALUM ANGLE WITH A REVERSE ROUTED FACE BACKED BY CLEAR ACRYLIC, TO BE PERIMETER ILLUMINATED WITH 3000K-3600k WARM WHITE LEDS TO BE ATTACHED TO THE ALUM FRAME

G REVERSE ROUTED AND BACKED CABINET
1236" 4" DEEP SINGLE SIDED CABINET MADE FROM STEEL ANGLE WITH A REVERSE CUT FACE BACKED BY 7328 WHITE ACRYLIC TO BE INTERNALLY ILLUMINATED WITH 3000K-3600k WARM WHITE LEDS TO BE ATTACHED TO THE SIGN FRAME

H SCROLLS
SCROLLS ARE TO BE HAND BENT FROM 3/8" STEEL SQ BAR AND BE WELDED TO THE FRAME

I CUSTOM LIGHT ASSEMBLY
LIGHT ASSEMBLY IS TO ATTACH TO THE POLE WITH VISIBLE TAMPER PROOF BUTTON HEAD HARDWARE SEE DSGN_GrandStair_BlackHawk_LightPole_Shop_031120.PDF PAGE FOR MORE DETAILS

-ALL HARD EDGES ARE TO BE ROUNDED OVER BY 1/16"

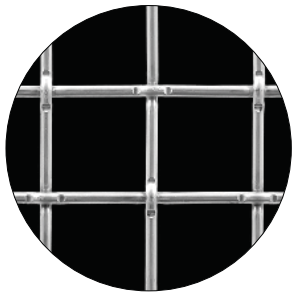

MESH EXAMPLE

COLOR KEY

P1 TBD · MATTE

bscsigns
BSC CUSTOM ARCHITECTURAL + LIGHTING
7245 W. 116th Pl. Broomfield, CO 80020
303.464.0644
www.bscsigns.com www.bcscustom.com

CLIENT NAME: GRAND STAIR
ADDRESS: GREGORY STREET
CITY / STATE / ZIP: BLACK HAWK COLORADO

SALES EXECUTIVE: ANGELA RENFRO
DESIGNER: CHRIS CARPENTER
ORIGINAL DATE: 03.11.2020

ARTWORK PHASE
- X SHOP
- REVISION #4
- FINAL ARTWORK

REVISIONS:

	DATE	REVISION	DESIGNER
1	03.18.2020	REVISED ART TO MATCH PEH MARK UPS	CC
2	04.22.2020	CHANGED MATERIAL AND LIGHT FIXTURE	
3	06.01.2020	CHANGED POLE SPACING AND ADDED SCROLLS	
4	06.10.2020	MOVED MOUNTING PLATE 6" BELOW GRADE	
5			
6			
7			
8			
9			
10			

CLIENT APPROVAL

Client Signature / Date:

Landlord Signature / Date:

SHEET 4 OF 4

FILE LOCATION PATH:
Y:\2020 Customer Art\PEH Architects\Grand Stair - Black Hawk\Sign Design\Concepts\DSGN_GrandStair_BlackHawk_PEH_Shop4_061020

123 of 297

GRAND STAIR
ENTRANCE TO LIVERY LOT
Black Hawk, CO 80422

PROJECT DIRECTORY

CLIENT:
City of Black Hawk
P.O. Box 68
Black Hawk, CO 80422
Matt Reed
P: (303) 582-2288
MReed@CityofBlackHawk.org

ARCHITECT:
PEH ARCHITECTS
1720 14th Street, Suite 100
Boulder, CO 80302
P: (303) 442-0408
Peter E. Hahn, AIA, Prindpal
pehahn@peharch.com
Nathan Platzke, AIA
nathanp@peharch.com

ELECTRICAL ENGINEER:
JCN Engineering
3261 Routt St.
West Ridge, CO 80033
P: (303) 239-9736
Jeff Nielsen, P.E.
jcneng@comcast.net

CIVIL ENGINEER:
Baseline.
112 N Rubey Drive, Suite 210
Golden, CO 80403
P:(303) 940-9966
Noah Nemmers
C:(303) 482-7712
noah@baselinecorp.com
Jordan Pliskowy
C:(720) 722-0169
jordan.pliskowy@baselinecorp.com

GENERAL CONTRACTOR:
Roche Constructors, INC.
1235 W. 124th Ave. Suite 100
Westminster, CO 80234
Greg Lockwood, Project Manager
P: (303) 920-5555
glockwood@rocheconstructors.com
Sean Hawley Estimator
P: 970-359-2527

STRUCTURAL ENGINEER:
Mozer-Renn Structural Services
8573 E. Napa Place
Denver, CO 80237
Natalie Mozer-Renn, Principal
P: (303) 759-2200
nmozer-renn@mrstructural.com

SURVEY:
Baseline.
112 N Rubey Drive, Suite 210
Golden, CO 80403
P: (303) 940-9966

PROJECT SUMMARY
BUILDING INFORMATION

PROJECT DESCRIPTION:

REPLACE AN EXISTING "TEMPORARY" GALVANIZED 4'-0" WIDE STAIRWAY WITH A NEW 10'-0" WIDE ORNAMENTAL STAIR. THE STAIRWAY CONNECTS THE PUBLIC WALKWAY (WITHIN THE R.O.W.) ON THE EAST TO AN UNDEVELOPED LOT ON THE WEST. DEVELOPEMENT OF THE LOT IS UNKNOWN BUT WOULD IDEALLY SERVE RESTAURANT AND RETAIL SPACES. THE STAIR FEATURES OPEN GRATE TREADS AND LANDING TO REDUCE WINTER TIME SNOW MAINTENANCE.

A LARGE WELCOME SIGN WITH CUSTOM LAMPS IS INCLUDED AS PART OF THE ENTRY TO THE BOTTOM AND TOP OF THE STAIR.

LANDSCAPE AND HARDSCAPE IMPROVEMENTS AT THE BOTTOM OF THE STAIR, TO CREATE A COMFORTABLE RESTING AREA.

REPLACE THE EXISTING 4' WIDE ASPHALT WALK ACROSS THE UNDEVELOPED LOT WITH A NEW 6'-0" WIDE MEANDERING COLORED CONCRETE WALK. INSTALL NEW HAWK LAMP POSTS TO PROVIDE PEDESTRIAN LEVEL LIGHTING ALONG THE WALK. THE WALK AND LAMP POSTS ARE EARMARKED AS TEMPORARY AND ARE ASSUMED TO BE REPLACED WITH THE DEVELOPMENT OF THE LOT.

AN ELEVATOR TO PROVIDE AN ACCESSIBLE CONNECTION FROM THE EAST TO WEST IS EARMARKED FOR FUTURE INSTALLATION AND IS NOT INCLUDED WITHIN THE SCOPE OF THIS PROJECT.

BUILDING JURISDICTION: CITY OF BLACK HAWK

ALL CONSTRUCTION SHALL CONFORM TO THE FOLLOWING APPLICABLE CODES:
- 2015 INTERNATIONAL BUILDING CODE (IBC)
- 2015 INTERNATIONAL EXISTING BUILDING CODE (IEBC)
- 2015 INTERNATIONAL FIRE CODE (IFC)
- 2015 INTERNATIONAL ENERGY CONSERVATION CODE (IECC)
- 2015 INTERNATIONAL MECHANICAL CODE (IMC)
- 2015 INTERNATIONAL FUEL GAS CODE (IFGC)
- 2015 INTERNATIONAL PLUMBING CODE (IPC)
- 2017 NATIONAL ELECTRICAL CODE (NEC)
- 2012 NATIONAL FIRE PROTECTION ASSOCIATION 101 (NFPA)
- 2009 INTERNATIONAL CODE COUNCIL/ AMERICAN NATIONAL STANDARD INSTITUTE (ICC/ANSI)
- * REFER TO BUILDING PERMIT DOCUMENTS AND ALL CONSTRUCTION DOCUMENTS FOR ADDITIONAL CODE REQUIREMENTS.

ZONE DISTRICT: HISTORIC APPRECIATION RECREATION DESTINATION (HARD)

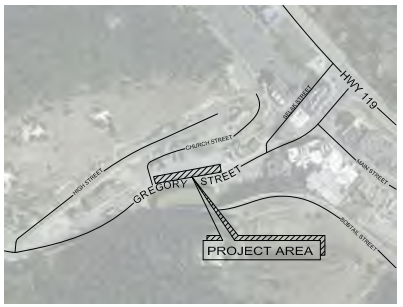

VICINITY MAP (EXISTING AERIAL PHOTO)
NOT TO SCALE

SHEET INDEX

SHEET NUMBER	SHEET TITLE
ARCHITECTURAL	
A000	COVER SHEET AND PROJECT INFORMATION
A100	DEMO PLAN
A101	SITE PLAN
A102	ENLARGED SITE PLAN
A103	SITE DETAILS AND PLANTING DETAILS
A200	GRAND STAIR PLANS, SECTIONS, & DETAILS
A300	ELEVATIONS & SECTIONS
A400	BLACK HAWK SIGN DETAILS
A401	BLACK HAWK LIGHT POST DETAILS
A700	DETAILS
CIVIL	
C100	GENERAL NOTES & LEGEND
C200	GRADING, EROSION & SEDIMENT CONTROL PLAN
C300	DETAILS 1
STRUCTURAL	
S200	FOUNDATION & FRAMING PLAN
S400	GENERAL NOTES & SECTIONS
S401	SECTIONS
ELECTRICAL	
E200	ELECTRICAL SITE LIGHTING PLAN
E201	ELECTRICAL LEGEND, SCHEDULES & ONE-LINE DIA.

VIEW OF TOP OF STAIRS

VIEW OF BOTTOM OF STAIRS

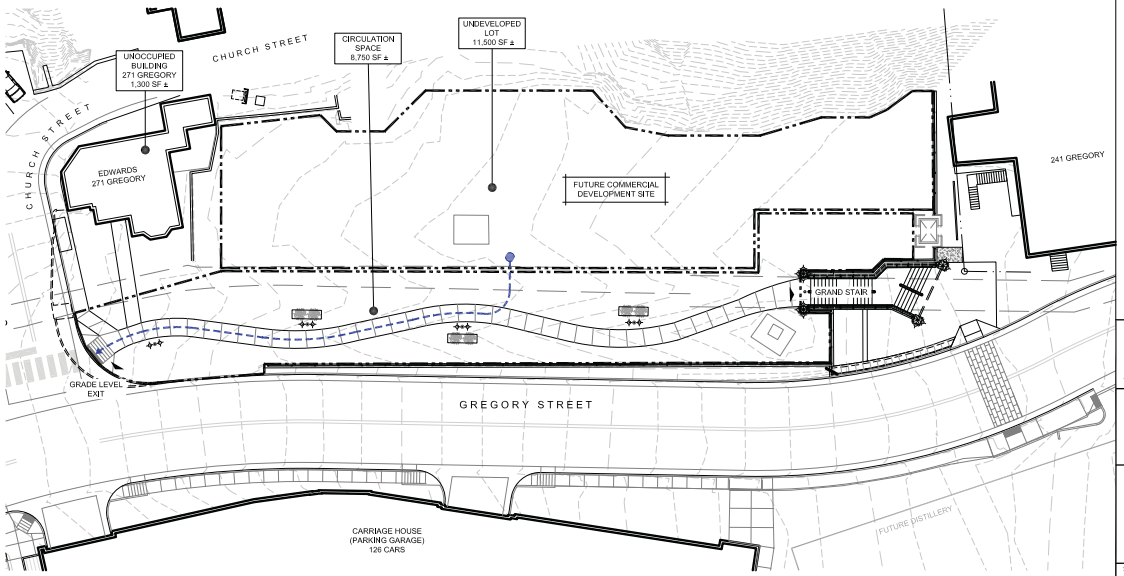

1 SITE EGRESS PLAN
1" = 20'-0"

LEGEND
= EGRESS EXIT
= MOST REMOTE LOCATION

NOTE:
PROPERTY LINES FOR THE SITE HAVE NOT YET BEEN CREATED / UPDATED SINCE THE RELOCATION OF GREGORY STREET. THE INTENT IS FOR ALL OF THE PROJECT SITE NORTH OF GREGORY STREET TO BE ON ONE PROPERTY. BOUND BY THE CHURCH STREET R.O.W ON THE WEST & NORTH, GREGORY STREET R.O.W. ON THE SOUTH AND 241 GREGORY PROPERTY ON THE EAST.

DEFFERED SUBMITTALS
- COMPREHENSIVE SIGN PLAN
- ENGINEERING OF SIGN AND LAMP POST BY SIGN VENDOR

COLORADO LICENSED
00402831
ARCHITECT
06/12/2020

NO.	DATE	REVISION
3	06/12/2020	PERMIT SUBMISSION
2	05/15/2020	90% CONSTRUCTION DOCUMENTS
1	04/10/2020	DD SUBMISSION

PEH ARCHITECTS
1720 14th Street Suite 100
Boulder, CO 80302
303-442-0408

GRAND STAIR
ENTRANCE TO LIVERY LOT

GREGORY STREET
Black Hawk, CO 80422

SHEET TITLE
COVER SHEET

PROJECT:	2019.24
DATE:	11/04/19
DRAWN BY:	LE
CHECKED BY:	PEH

SHEET NUMBER
A000

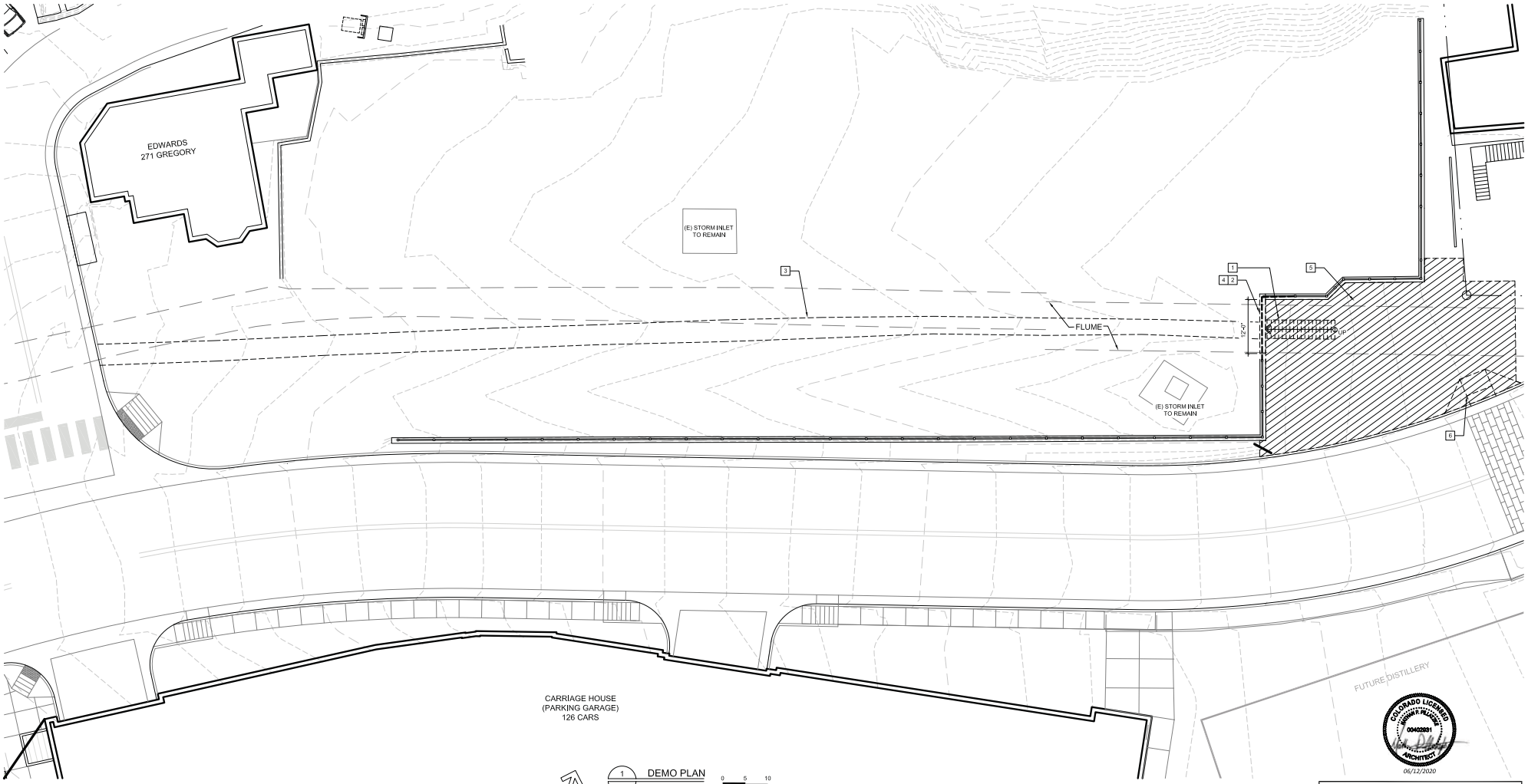

1 DEMO PLAN
1" = 10'-0"
0 5 10

SITE PLAN - KEYNOTES:

1. DEMO (E) GALV. STAIRS
2. DEMO (E) WALL. KEEP PORTION BELOW. RE: PROPOSED PLANS
3. DEMO (E) ASPHALT SIDE WALK
4. DEMO (E) GUARDRAIL AT NEAREST POST.
5. DEMO AND REMOVE CONC. SLAB ON GRADE. SAW CUT AT ADJOINING SLABS.
6. DEMO (E) CURB RAMP

DEMO PLAN KEY

- T TRANSFORMER
- LIGHT POLE
- FIRE HYDRANT / FDC

COLORADO LICENSED
00402831
ARCHITECT
06/12/2020

NO.	DATE	REVISION
3	06/12/2020	PERMIT SUBMISSION
2	05/15/2020	90% CONSTRUCTION DOCUMENTS
1	04/10/2020	DD SUBMISSION

PEH ARCHITECTS
1720 14th Street Suite 100
Boulder, CO 80302
303-442-0408

GRAND STAIR
ENTRANCE TO LIVERY LOT

GREGORY STREET
Black Hawk, CO 80422

SHEET TITLE
DEMO PLAN

PROJECT:	2019.24
DATE:	11/04/19
DRAWN BY:	PEH
CHECKED BY:	NAB

SHEET NUMBER
A100

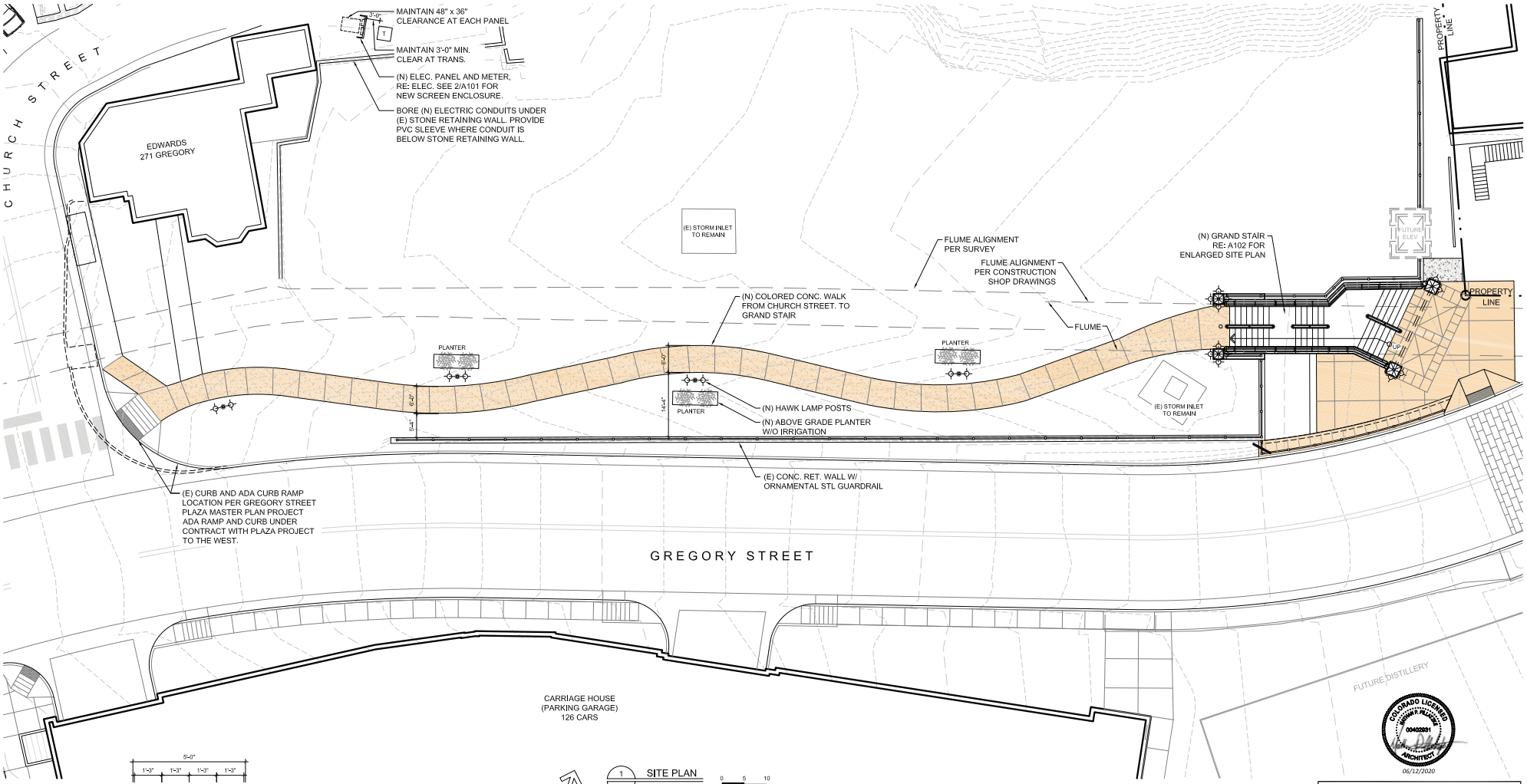

1 SITE PLAN
1" = 10'-0"
0 5 10

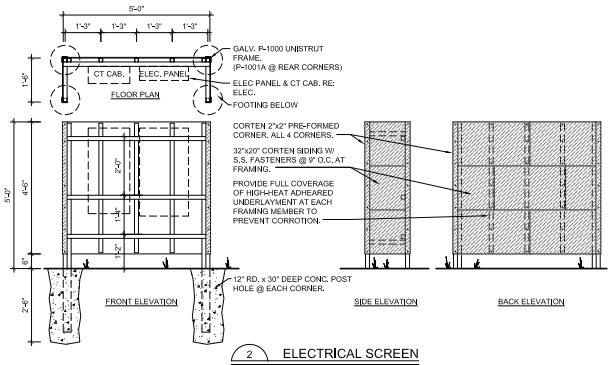

2 ELECTRICAL SCREEN
1/2" = 1'-0"

LEGEND

COLORED CONCRETE WALK
-6" THICK SLAB ON GRADE. U.N.O. OVER 4" COMPACTED GRAVEL BASE
-BAJA RED BY DAVIS COLORS
-SAW CUT JOINTS AS SHOWN AT BOTTOM OF STAIR - CONTROL JOINTS @ 6'-0" O.C. ALONG WALK

GREY CONCRETE WALK
-6" THICK SLAB ON GRADE. U.N.O. OVER 4" COMPACTED GRAVEL BASE
-ALIGN CONTROL JOINTS WITH ADJACENT WORK AND/OR 6'-0" O.C. ALONG WALKWAYS.

PEDESTRIAN LIGHT FIXTURE - RE: 1/A103

LANTERN LIGHT FIXTURE ON POST - RE: A400 & A401

FREE STANDING ABOVE GRADE PLANTER . NO IRRIGATION. BY OWNER

T TRANSFORMER

BOLLARD

NOTE
PROPERTY LINES FOR THE SITE HAVE NOT YET BEEN CREATED / UPDATED SINCE THE RELOCATION OF GREGORY STREET. THE INTENT IS FOR ALL OF THE PROJECT SITE NORTH OF GREGORY STREET TO BE ON ONE PROPERTY. BOUND BY THE CHURCH STREET R.O.W ON THE WEST & NORTH, GREGORY STREET R.O.W. ON THE SOUTH AND 241 GREGORY PROPERTY ON THE EAST.

COLORADO LICENSED
00402231
ARCHITECT
06/12/2020

NO.	DATE	REVISION
3	06/12/2020	PERMIT SUBMISSION
2	05/15/2020	90% CONSTRUCTION DOCUMENTS
1	04/10/2020	DD SUBMISSION

PEH ARCHITECTS
1720 14th Street Suite 100
Boulder, CO 80302
303-442-0408

GRAND STAIR
ENTRANCE TO LIVERY LOT

GREGORY STREET
Black Hawk, CO 80422

SHEET TITLE
SITE PLAN

PROJECT:	2019.24
DATE:	11/04/19
DRAWN BY:	NAB
CHECKED BY:	PEH

SHEET NUMBER
A101

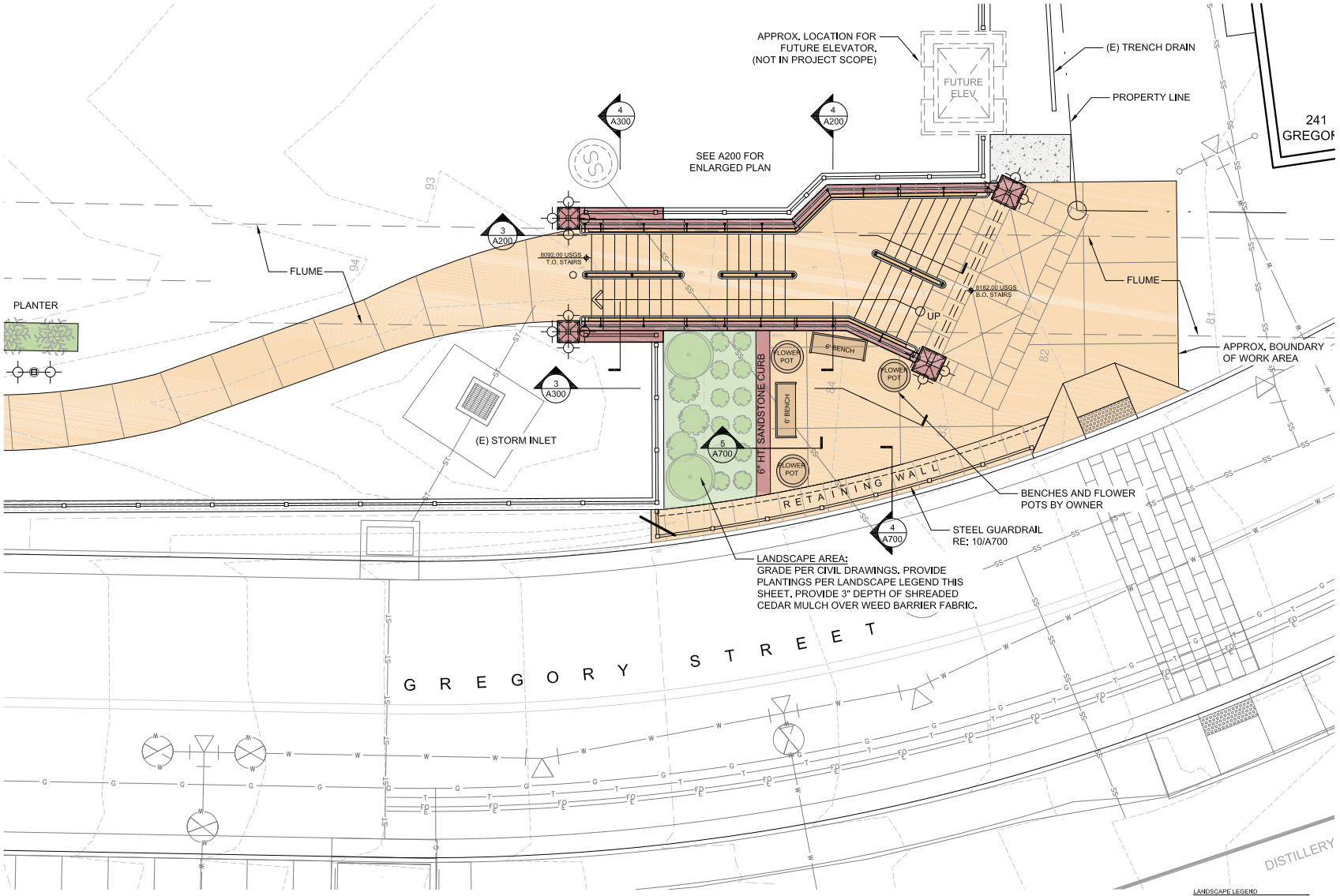

1 ENLARGED SITE PLAN
1" = 5'-0"
0 2.5 5

LANDSCAPE LEGEND

QUAKING ASPEN (NURSERY GROWN)
POPULUS TREMULOIDES
(50% CLUMP, 50% 3" CALIPER / 50% 2" CALIPER)

ARCTIC FIRE DWARF REDTWIG DOGWOOD
CORNUS SERICEA "FARROW"
2' HT, B&B

STIPA GRASS
ACANATHERUM CALAMOGROSTIS
1 GALLON

TREES AND SHRUBS TO BE PLANTED PER DETAILS ON SHEET A103

SEE LANDSCAPE PLANTING NOTES ON SHEET A103

COLORADO LICENSED 00402831 ARCHITECT

06/12/2020

NO.	DATE	REVISION
3	06/12/2020	PERMIT SUBMISSION
2	05/15/2020	90% CONSTRUCTION DOCUMENTS
1	04/10/2020	DD SUBMISSION

PEH ARCHITECTS
1720 14th Street Suite 100
Boulder, CO 80302
303-442-0408

GRAND STAIR
ENTRANCE TO LIVERY LOT

GREGORY STREET
Black Hawk, CO 80422

SHEET TITLE
ENLARGED SITE PLAN

PROJECT:	2019.24
DATE:	11/04/19
DRAWN BY:	NAB
CHECKED BY:	PEH

SHEET NUMBER
A102

1. CONTRACTOR SHALL REFER TO PLANS FOR PLANT QUANTITIES AND LAYOUT. PRIOR TO COMMENCEMENT OF PLANTING, THE CONTRACTOR SHALL MEET W./ THE L.A. AND OWNERS REPRESENTATIVE TO REVIEW THE PLANS AND WALK THE SITE. CONTRACTOR SHALL NOTIFY L.A. IN ADVANCE OF PLANT MATERIAL ARRIVING ON SITE.

2. LANDSCAPE CONTRACTOR SHALL FIELD VERIFY ALL PLANT QUANTITIES AND DIMENSIONS PRIOR TO INSTALLATION WITH L.A. FINAL LOCATION AND STAKING OF ALL PLANT MATERIAL SHALL BE ACCEPTED BY THE L.A. OF OWNERS REPRESENTATIVE IN ADVANCE OF PLANTING. CONTACTORS BASE BID SHALL ANTICIPATE MINOR FIELD ADJUSTMENTS TO BECDINES AND PLANT LOCATIONS BY LANDSCAPE ARCHITECT OR OWNER. LOCATIONS MAY BE ADJUSTED TO ADDRESS FIELD CONDITIONS AS WARRANTED WITH APPROVAL OF L.A. THE L.A. SHALL BE ON SITE TO REVIEW LAYOUT OF ALL CONTAINER PLANTS. QUANTITIES SHOWN IN PLANT LISTS ARE FOR ESTIMATING. PLANS SHALL GOVERN.

3. THE LOCATION AND PROTECTION OF ALL UTILITIES, STRUCTURES AND EXISTING LANDSCAPING TO REMAIN IS THE RESPONSIBILITY OF THE LANDSCAPE CONTRACTOR. CONTRACTOR SHALL NOTIFY ALL NECESSARY UTILITY COMPANIES 48 HOURS MINIMUM PRIOR TO DIGGING FOR VERIFICATION OF ALL UNDERGROUND UTILITIES. THE CONTRACTOR SHALL FIELD ACJUST LOCATIONS OF PLANT MATERIAL AS NECESSARY TO AVOID DAMAGE TO EXISTING UNDERGROUND UTILITIES AND, OR EXISTING ABOVE GROUND ELEMENTS. TREES TO BE PLANTED WITHIN 8' OF UTILITIES ARE TO BE BROUGHT TO ATTENTION OF OWNER AND L.A. FOR APPROVAL. ALL CHANGES REQUIRED SHALL BE COMPLETED AT THE CONTRACTOR'S EXPENSE AND SHALL BE COORDINATED W/ THE OWNERS REPRESENTATIVE AND THE L.A.

4. THE LANDSCAPE CONTRACTOR SHALL NOTIFY THE L.A. OF ANY DISCREPANCIES IN PLANT LOCATIONS OR INSUFFICIENT PLANT QUANTITIES DUE TO DIFFERENCES IN PLAN AND ACTUAL FIELD CONDITIONS.

5. THE LANDSCAPE CONTRACTOR SHALL NOTIFY THE L.A. 30 DAYS PRIOR TO PLANTING OPERATIONS FOR APPROVAL OF ALL PLANT MATERIAL AT PLACE OF GROWTH. ALL PLANT MATERIAL NOT PREVIOUSLY APPROVED BY THE L.A. WILL BE SUBJECT TO REJECTION. PLANTING IS TO BE PERFORMED DURING FAVORABLE WEATHER CONDITIONS, DURING THE NORMAL SEASONS FOR SUCH WORK AS DETERMINED BY ACCEPTABLE LOCAL PRACTICE. NECESSARY SCHEDULING AND OTHER PRECAUTIONS ARE TO BE INCLUDED IN BASE BID TO AVOID WINTER, SUMMER DRYNESS, AND OTHER WEATHER RELATED DAMAGE TO PLANTS.

6. ALL PLANT MATERIALS SHALL BE OF THE SPECIFIED QUALITY AND SIZE AS NOTED ON THE PLANT LIST. IN ACCORDANCE W/ THE AMERICAN STANDARDS FOR NURSERY STOCK GUIDELINES. CHANGES AND SUBSTITUTIONS ARE TO BE APPROVED BY OWNER AND L.A.

7. ALL PLANT MATERIAL IS TO BE IN A HEALTHY, AND DISEASE FREE STATE. ALL PLANT MATERIALS SHALL BE INSTALLED USING STANDARD HORTICULTURAL PRACTICES IN ACCORDANCE W/ THE PLANS AND DETAILS. THE TREES, SHRUBS, PERENNIALS, GROUND COVERS AND GRASSES SHALL BE GUARANTEED FOR A PERIOD OF 2 YEARS, BEGINNING AFTER THE FINAL ACCEPTANCE. LANDSCAPE CONTRACTOR IS RESPONSIBLE FOR REPLACING ALL DEAD OR DYING PLANT MATERIAL FREE OF CHARGE FOR THE TERM OF TWO YEARS FROM THE COMPLETION OF WORK AND FINAL ACCEPTANCE (CONTRACTORS GUARANTEE).

8. ALL LANDSCAPE AREAS SHALL BE GRADED TO A SMOOTH EVEN SURFACE PRIOR TO ANY PLANT INSTALLATION. POSITIVE DRAINAGE FROM ALL BUILDINGS IS TO BE MAINTAINED WITH ACCURATELY SET FLOWLINES TO MAINTAIN FLOW. WEED FREE TOPSOIL IS TO BE INSTALLED AND EVENLY SPREAD TO A MINIMUM DEPTH 4" FOR SOD LAWN AREAS, AND 2" AT NATIVE REVEGETATION AREAS. NO ROCKS GREATER THAN 1" DIAMETER OR DEBRIS WILL BE ACCEPTED. ALLOW TIME TO GERMINATE AND ELIMINATE WEEDS. TOPSOIL FOR PERENNIAL AND ANNUAL BEDS SHALL BE PROVIDED AT A DEPTH OF 12".

9. THIS WORK INCLUDES, BUT IS NOT LIMITED TO THE FURNISHING OF ALL LABOR, MATERIALS, EQUIPMENT, FINAL GRADING, SEEDING, SOIL AMENDMENTS, ETC., AS MAY BE REQUIRED FOR A COMPLETE INSTALLATION.

10. ALL TREES SHALL BE STAKED IN ACCORDANCE WITH "AMERICAN STANDARDS FOR NURSERY STOCK", PUBLISHED BY THE AMERICAN ASSOCIATION OF NURSERYMEN, AND THE PLANTING DETAILS.

11. ALL EXISTING TREES TO REMAIN SHALL BE PROTECTED WITH PERIMETER INSTALLATION OF 3' HIGH ORANGE CONSTRUCTION FENCE AT THE TREE'S DRIP LINE. THE CONTRACTOR SHALL NOT STORE MATERIALS OR EQUIPMENT, PERMIT BURNING, OPERATE OR PARK EQUIPMENT UNDER THE BRANCHES OF ANY EXISTING PLANT TO REMAIN EXCEPT AS ACTUALLY REQUIRED FOR CONSTRUCTION IN THOSE AREAS.

12. ALL TREES AND SHRUBS AND PERENNIALS ARE TO BE PLANTED IN HOLES TWICE TO THREE TIMES THE WIDTH OF THEIR ROOT BALL AND BACK FILLED IN ACCORDANCE WITH THE DETAILS.

13. UNLESS INDICATED OTHERWISE ON THE PLANS, ALL TREE AND SHRUB PLANTING BED AREAS ARE TO RECEIVE 3" MINIMUM DEPTH SHREDDED CEDAR MULCH. ONLY WELL-COMPOSTED MULCH SHALL BE SELECTED. LANDSCAPE CONTRACTOR IS TO INSTALL 10" DEEP TOPSOIL AT LOCATIONS NOTED ON PLANS FOR PERENNIALS. CxBH GARDENERS TO INSTALL PERENNIALS WITH BEDS FINISHED WITH 2" MIN. "SOIL PEP SOIL CONDITIONER" WITH NO WEED BARRIER.

14. THE CONTRACTOR IS RESPONSIBLE FOR THE REMOVAL FROM THE OWNER'S PROPERTY OF ALL WASTE MATERIAL GENERATED FROM THE PLANTING OPERATIONS. CONTRACTOR IS RESPONSIBLE FOR PREVENTING THE RELEASE OF SEDIMENT FLOW FROM THE SITE, AND SHALL CONFORM WITH BEST PRACTICES IN THE UTILIZATION OF SILT FENCES, STRAW BAILS, ETC. AS PER THE EROSION CONTROL PLAN.

15. LANDSCAPE CONTRACTOR SHALL COORDINATE ALL WORK W/ RELATED CONTRACTORS AND W/ THE GENERAL CONSTRUCTION OF THE PROJECT.

16. ALL TOPSOIL SUPPLIED FOR THE PROJECT SHALL CONSIST OF FERTILE, FRIABLE LOAM OR SANDY LOAM FREE FROM SUBSOIL, COARSE MATERIAL, BRUSH AND STONES >1". SUITABLE FOR THE SUPPORT OF VEGETATIVE GROWTH. pH VALUE SHALL BE BETWEEN 7.0 AND 8.0 WITH 3% MIN ORGANIC CONTENT.

17. ALL PROPOSED LANDSCAPING IS TO BE IRRIGATED BY MEANS OF A LOW-WATER USE, AUTOMATIC, UNDERGROUND IRRIGATION SYSTEM TIED TO CxBH SYSTEM. TREES AND SHRUBS SHALL BE DRIP IRRIGATED. PERENNIAL AND REVEG AREAS TO BE MICROSPRAY IRRIGATED. IRRIGATION CONTRACTOR TO PROVIDE "SHOP DRAWINGS" TO OWNER, DETAILING ALL IRRIGATION CONSTRUCTION, AND PRESSURE LOSS, GPM CALCULATIONS AND WATER CONSERVATION METHODS. FOR REVIEW BY STAFF. ASSUME ADJUSTMENTS WILL BE NECESSARY BASED ON FIELD CONDITIONS. WITH FINAL IRRIGATION SYSTEM INSTALLATION SUBJECT TO PUBLIC WORKS INSPECTION AND ACCEPTANCE.

18. NATIVE REVEGETATION AREAS WILL CONSIST OF HYDROSEEDING OF NATIVE GRASS SEED MIX. SEED MIX IS TO BE SPRAY APPLICATED WITH A HYDRO MULCH AND TACKIFIER ON SLOPES 3:1 OR LESS. SLOPES STEEPER THAN 3:1 ARE TO RECEIVE NETTING OR MULCH BLANKET TO MINIMIZE EROSION AND ENCOURAGE GERMINATION. SEED MIX IS TO CONSIST AS GENERALLY SPECIFIED BELOW, APPLIED AT A MINIMUM RATE OF 4 LBS. PER 1000 SQ. FT.

Sheep Fescue	25%	Arizona Fescue	20%
Mountain Brome	10%	Sanberg/ Alpine Bluegrass	25%
Rocky Mt/ Idaho Fescue	15%	Linum lewisii - Blue Flax	5%

6 PLANTING NOTES
N.T.S.

LANDSCAPE NOTES & DETAILS
THESE NOTES AND DETAILS ARE COPIED FROM THE "GREGORY STREET PLAZA" LANDSCAPE DRAWINGS PREPARED BY MARY HART DESIGN. INTENT IS FOR THE LANDSCAPING ON THIS PROJECT TO MATCH PLANT & PLANTING QUALITY DESIGN OF THAT PROJECT. PLANT SPECIES/QUANTITY/SPACING MAY BE MODIFIED THROUGH REQUEST FOR SUBSTITUTION WITHOUT ADDITIONAL COSTS TO THE OWNERSHIP.

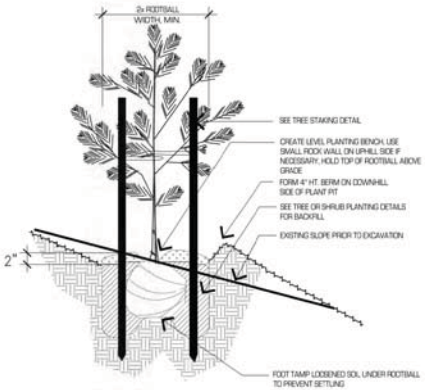

4 TREE OR SHRUB PLANTING ON SLOPE
N.T.S.

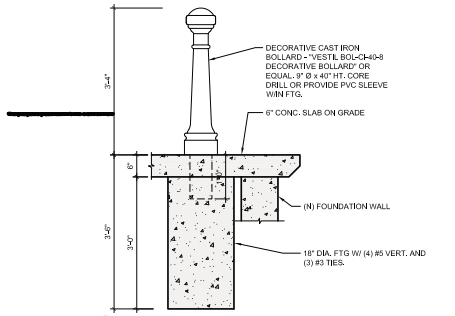

2 ORNAMENTAL BOLLARDS
3/4" = 1'-0"
0 1 2

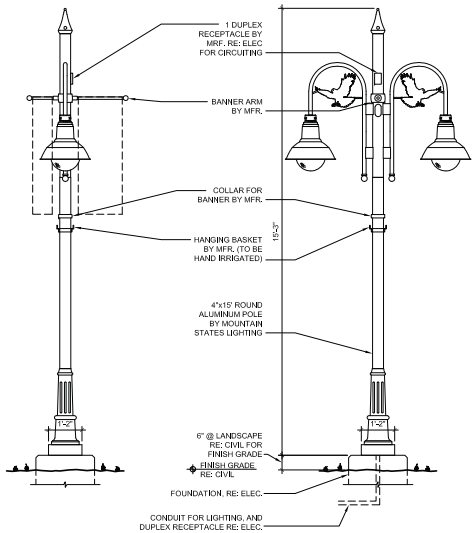

1 PEDESTRAIN LAP POST
1/2" = 1'-0"
0 1 2

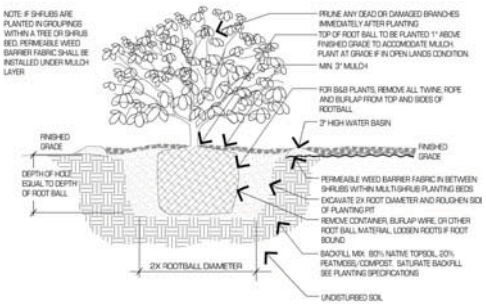

5 SHRUB PLANTING DETAIL
N.T.S.

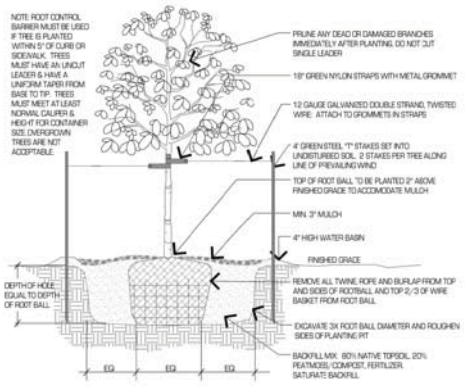

3 TREE PLANTING DETAIL
N.T.S.

COLORADO LICENSED
00402831
ARCHITECT
06/12/2020

NO.	DATE	REVISION
3	06/12/2020	PERMIT SUBMISSION
2	05/15/2020	90% CONSTRUCTION DOCUMENTS
1	04/10/2020	DD SUBMISSION

PEH ARCHITECTS
1720 14th Street Suite 100
Boulder, CO 80302
303-442-0408

GRAND STAIR
ENTRANCE TO LIVERY LOT

GREGORY STREET
Black Hawk, CO 80422

SHEET TITLE
SITE DETAILS AND PLANTING DETAILS

PROJECT:	2019.24
DATE:	11/04/19
DRAWN BY:	NAB
CHECKED BY:	PEH

SHEET NUMBER
A103

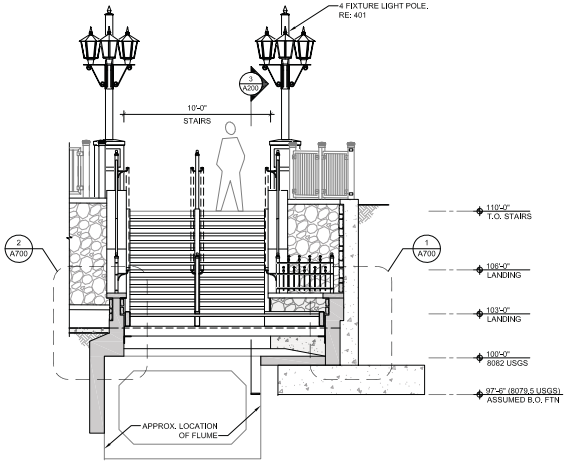

4 SECTION 2
1/4" = 1'-0"

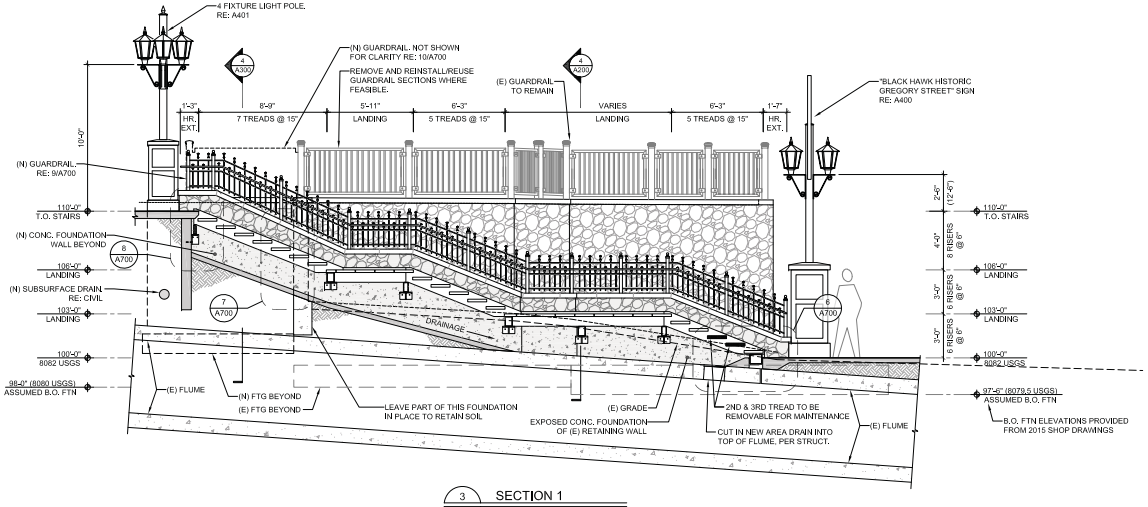

3 SECTION 1
1/4" = 1'-0"

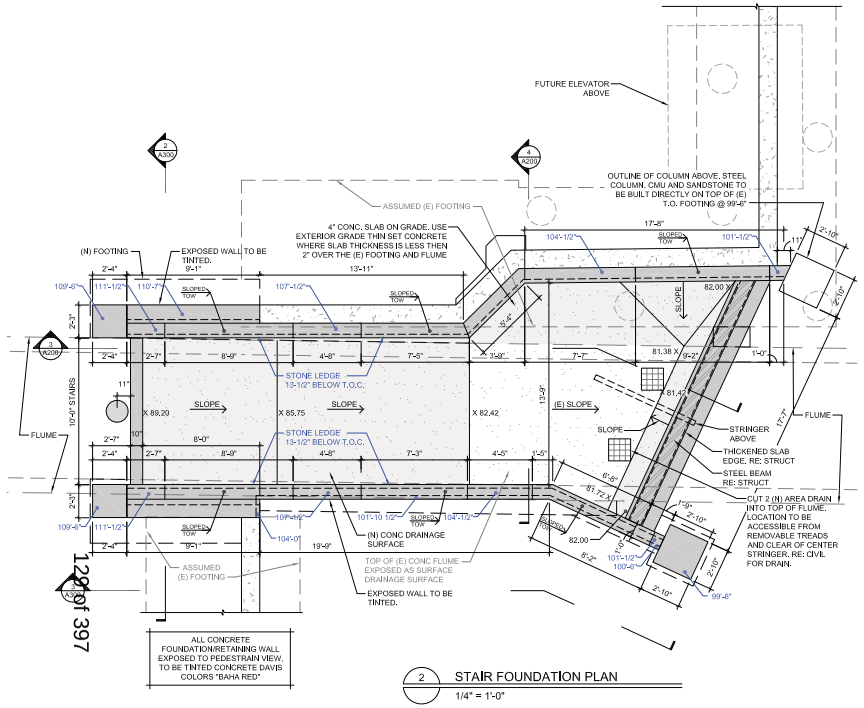

2 STAIR FOUNDATION PLAN
1/4" = 1'-0"

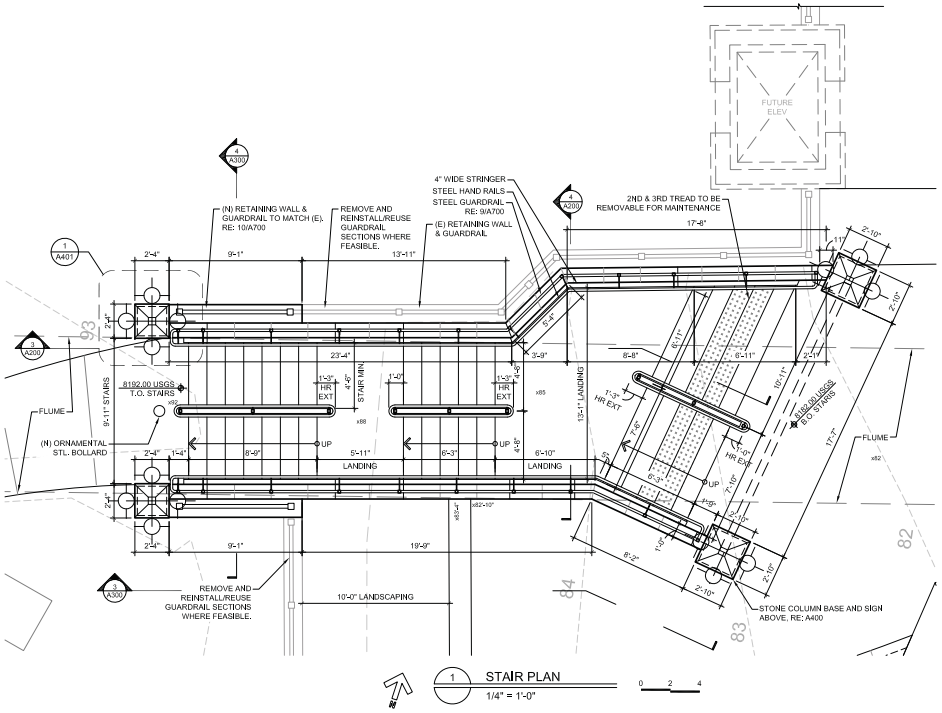

1 STAIR PLAN
1/4" = 1'-0"

0 2 4

COLORADO LICENSED 00402831 ARCHITECT
06/12/2020

NO.	DATE	REVISION
3	06/12/2020	PERMIT SUBMISSION
2	05/15/2020	90% CONSTRUCTION DOCUMENTS
1	04/10/2020	DD SUBMISSION

PEH ARCHITECTS
1720 14th Street Suite 100
Boulder, CO 80302
303-442-0408

GRAND STAIR ENTRANCE TO LIVERY LOT

GREGORY STREET
Black Hawk, CO 80422

SHEET TITLE
GRAND STAIR PLANS, SECTIONS, & DETAILS

PROJECT:	2019.24
DATE:	11/04/19
DRAWN BY:	NAB
CHECKED BY:	PEH

SHEET NUMBER
A200

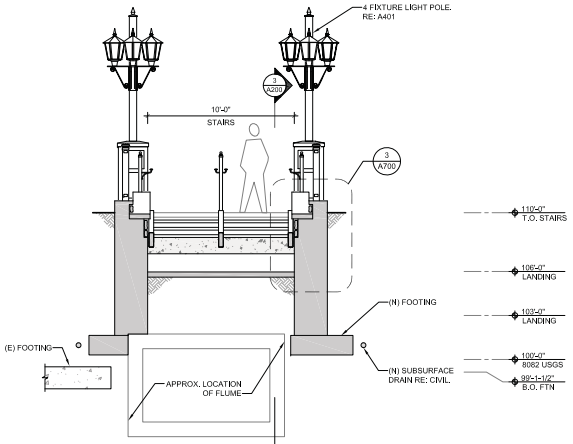

4 SECTION 4
1/4" = 1'-0"

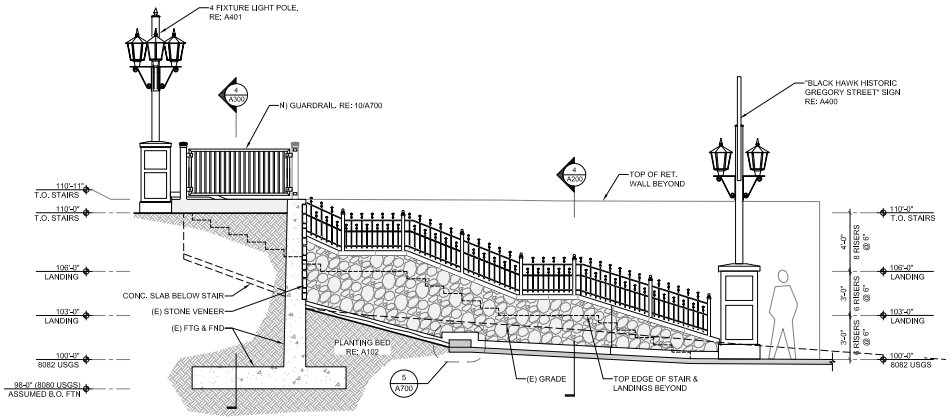

3 SECTION 3
1/4" = 1'-0"

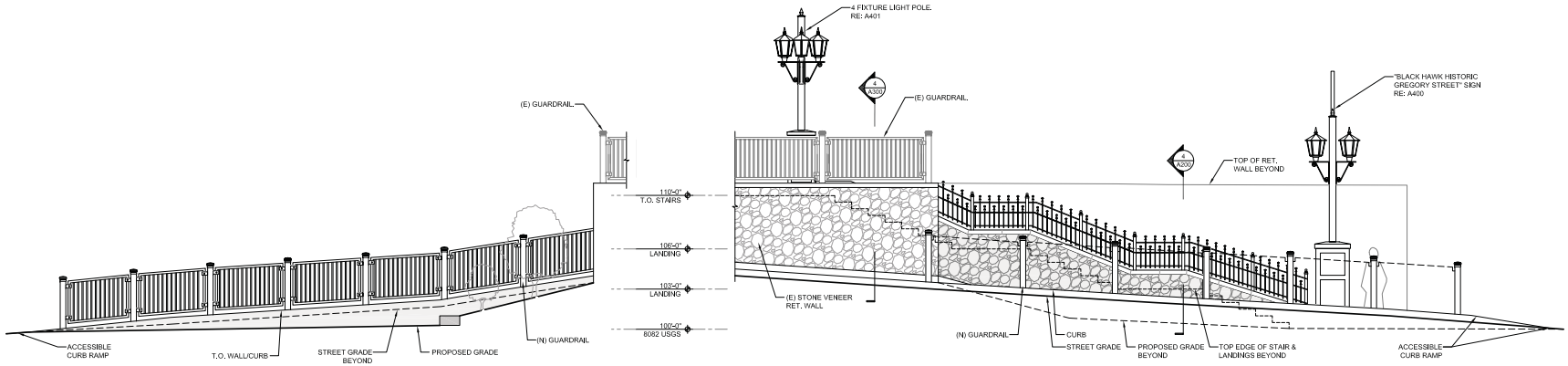

1 NORTH ELEVATION
1/4" = 1'-0"
0 2 4

1 SOUTH ELEVATION
1/4" = 1'-0"

COLORADO LICENSED
00402231
ARCHITECT
06/12/2020

NO.	DATE	REVISION
3	06/12/2020	PERMIT SUBMISSION
2	05/15/2020	90% CONSTRUCTION DOCUMENTS
1	04/10/2020	DD SUBMISSION

PEH ARCHITECTS
1720 14th Street Suite 100
Boulder, CO 80302
303-442-0408

GRAND STAIR
ENTRANCE TO LIVERY LOT

GREGORY STREET
Black Hawk, CO 80422

SHEET TITLE
ELEVATIONS & SECTIONS

PROJECT: 2019.24
DATE: 11/04/19
DRAWN BY: NAB
CHECKED BY: PEH

SHEET NUMBER
A300

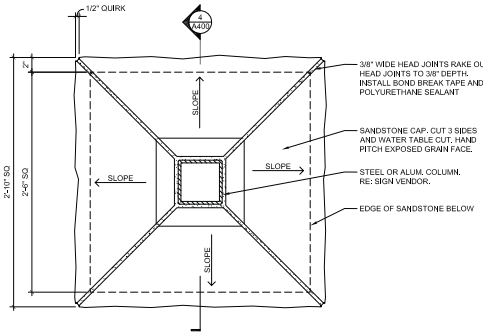

8 LAMP POST SECTION
1-1/2" = 1'-0"

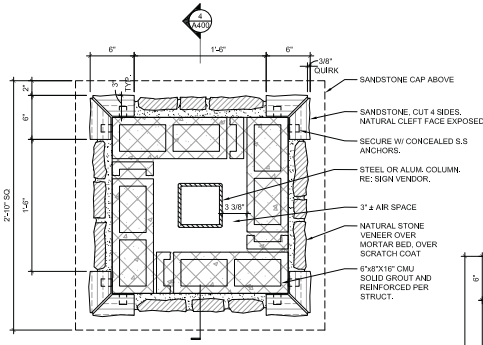

7 LAMP POST SECTION
1-1/2" = 1'-0"

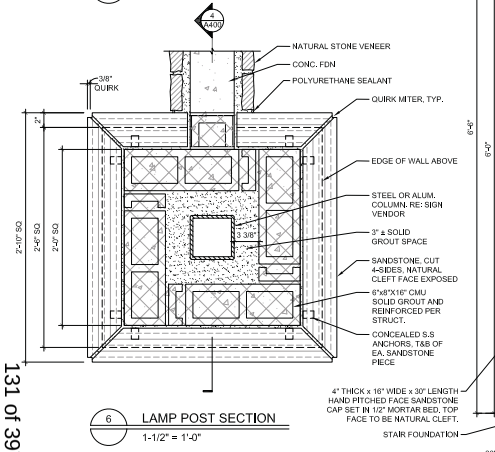

6 LAMP POST SECTION
1-1/2" = 1'-0"

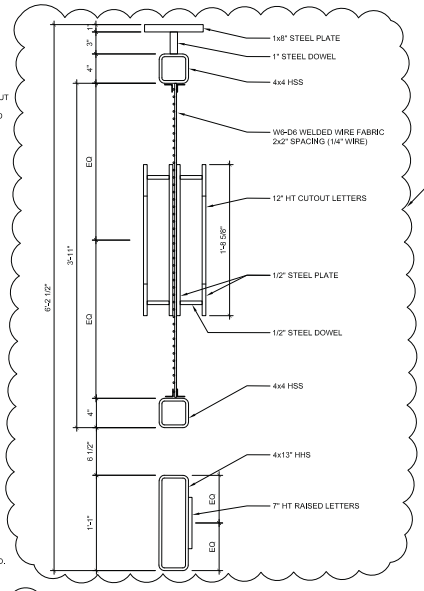

5 BH SIGN SECTION
1-1/2" = 1'-0"

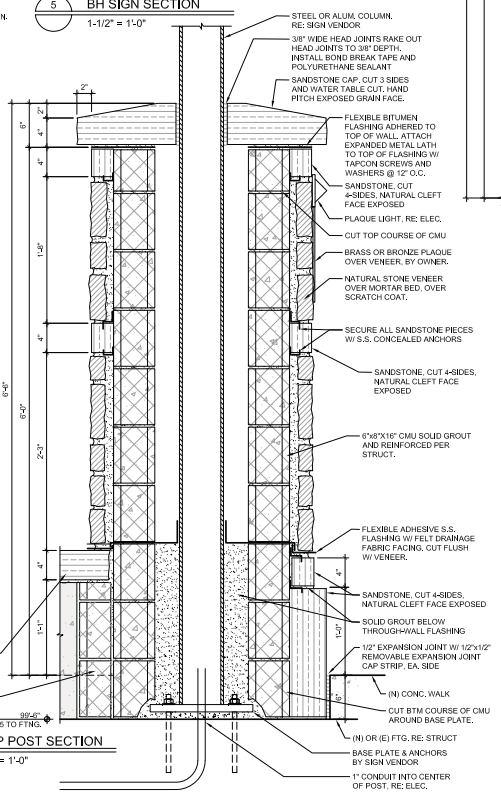

4 LAMP POST SECTION
1-1/2" = 1'-0"

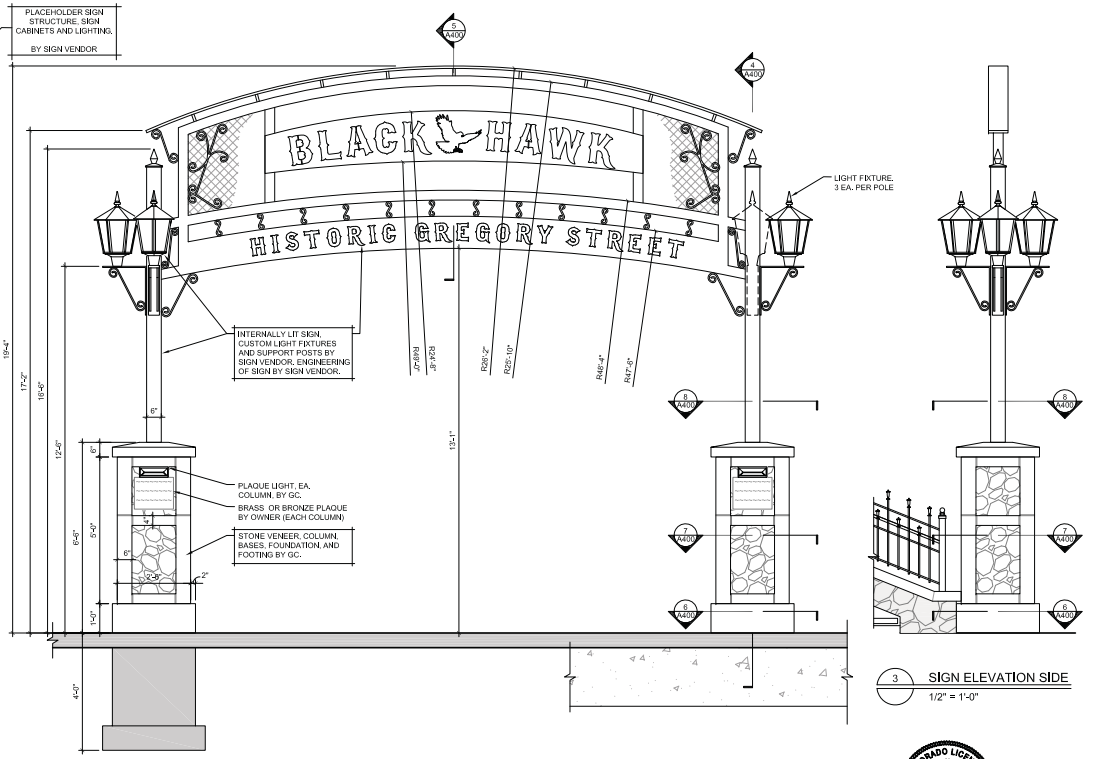

2 SIGN ELEVATION FRONT
1/2" = 1'-0"

3 SIGN ELEVATION SIDE
1/2" = 1'-0"

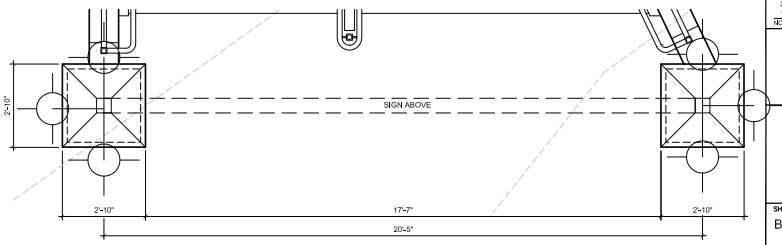

1 ENLARGED PLAN - SIGN
1/2" = 1'-0"

0 1 2

COLORADO LICENSED PROFESSIONAL ENGINEER 00402831 ARCHITECT
06/12/2020

NO.	DATE	REVISION
3	06/12/2020	PERMIT SUBMISSION
2	05/15/2020	90% CONSTRUCTION DOCUMENTS
1	04/10/2020	DD SUBMISSION

PEH ARCHITECTS
1720 14th Street Suite 100
Boulder, CO 80302
303-442-0408

GRAND STAIR
ENTRANCE TO LIVERY LOT

GREGORY STREET
Black Hawk, CO 80422

SHEET TITLE
BLACK HAWK SIGN DETAILS

PROJECT:	2019.24
DATE:	11/04/19
DRAWN BY:	NAB
CHECKED BY:	PEH

SHEET NUMBER
A400

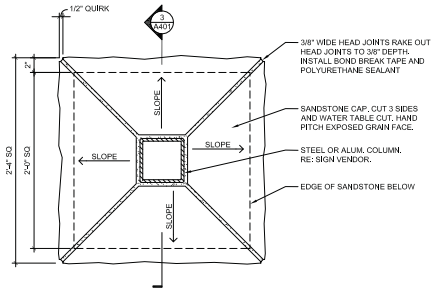

7 LAMP POST SECTION
1-1/2" = 1'-0"

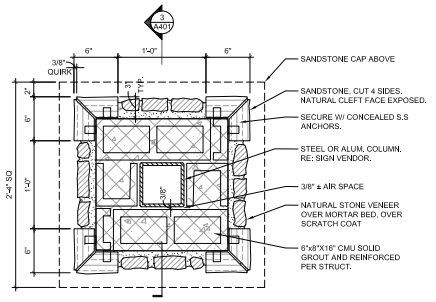

6 LAMP POST SECTION
1-1/2" = 1'-0"

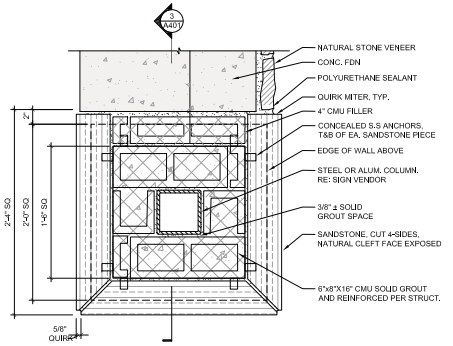

5 LAMP POST SECTION
1-1/2" = 1'-0"

4 NOT USED

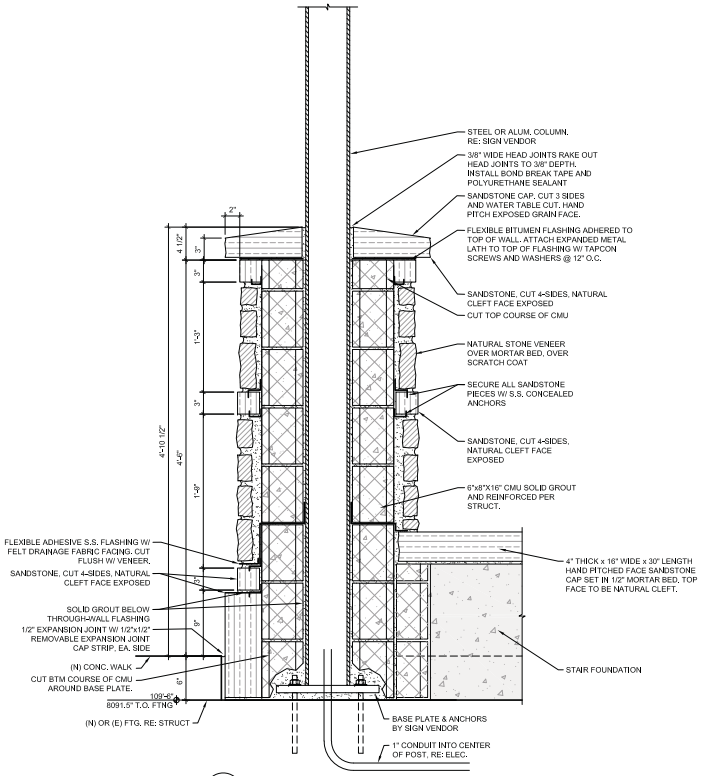

3 LAMP POST SECTION
1-1/2" = 1'-0"

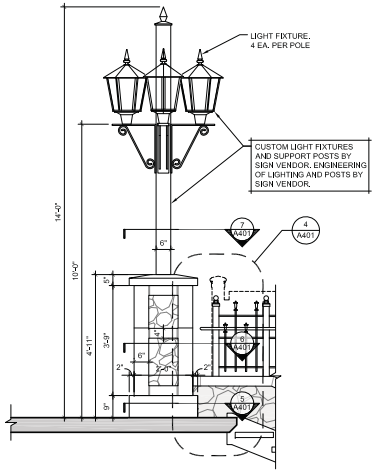

2 LIGHT COLUMN ELEVATION
1/2" = 1'-0"

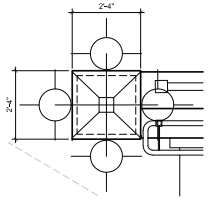

1 ENLARGED PLAN - SIGN
1/2" = 1'-0"

0 1 2

COLORADO LICENSED
00402831
ARCHITECT
06/12/2020

NO.	DATE	REVISION
3	06/12/2020	PERMIT SUBMISSION
2	05/15/2020	90% CONSTRUCTION DOCUMENTS
1	04/10/2020	DD SUBMISSION

PEH ARCHITECTS
1720 14th Street Suite 100
Boulder, CO 80302
303-442-0408

GRAND STAIR
ENTRANCE TO LIVERY LOT

GREGORY STREET
Black Hawk, CO 80422

SHEET TITLE
BLACK HAWK LIGHT POST DETAILS

PROJECT:	2019.24
DATE:	11/04/19
DRAWN BY:	NAB
CHECKED BY:	PEH

SHEET NUMBER
A401

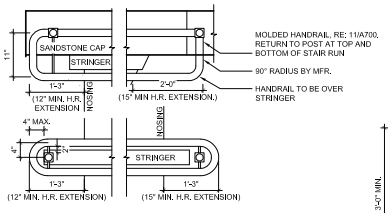

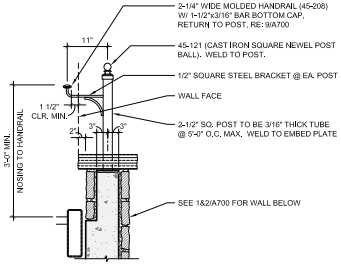

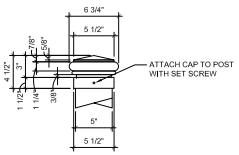

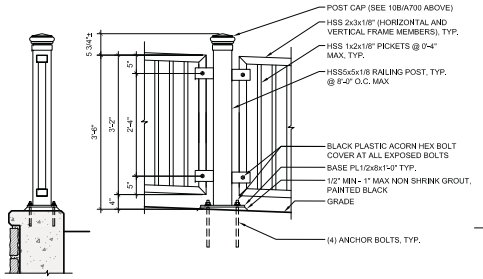

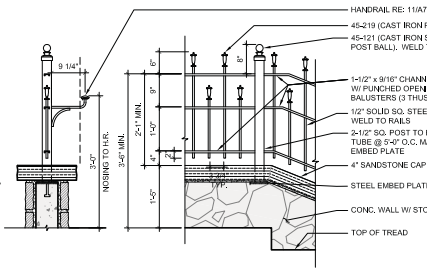

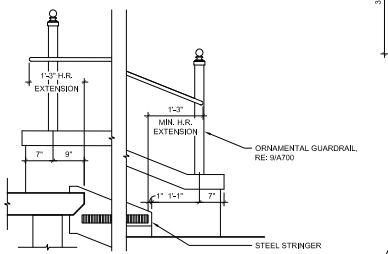

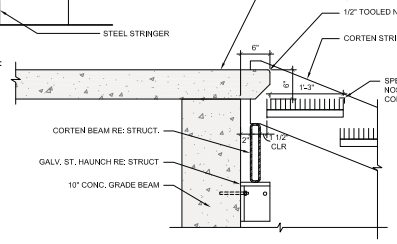

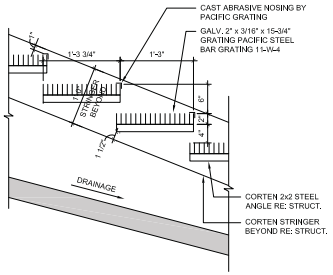

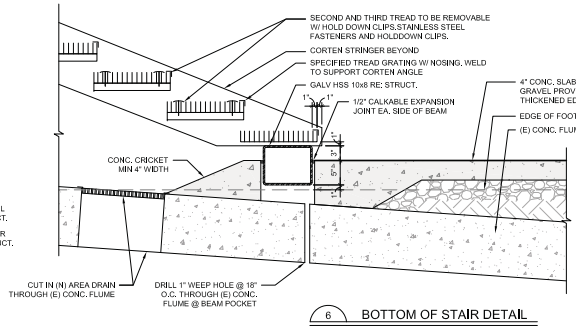

GREGORY STREET ORNAMENTAL METAL GURARDRAIL NOTES:

1. COORDINATE WITH STRUCTURAL DRAWINGS
2. ALL HORIZONTAL MEMBERS SHALL BE PARALLEL WITH TOP OF WALL.
3. ALL POSTS SHALL BE PLUMB.
4. ALL ANCHOR BOLTS SHALL BE AN EPOXY ADHESIVE ANCHOR SYSTEM WITH A MINIMUM ULTIMATE PULLOUT STRENGTH OF 20,000 LBS PER ANCHOR AND BE INSTALLED IN ACCORDANCE WITH THE MANUFACTURER'S RECOMMENDATIONS. DIAMETER OF THE HOLE SHALL BE PER MANUFACTURER'S SPECIFICATIONS.
5. ANCHOR BOLTS SHALL BE TIGHTENED TO "SNUG TIGHT" CONDITION WITH THREADS BURRED.
6. RAIL ATTACHMENT BOLTS SHALL BE TIGHTENED TO "SNUG TIGHT" CONDITION, LOOSENED ONE FULL TURN (ONE SIDE OF PANEL ONLY) WITH THREADS BURRED.
7. ALL FENCE COMPONENTS SHALL BE PAINTED BLACK (SHOP PAINTED WITH FIELD TOUCH-UPS USING POLYURETHANE PAINT). OWNER TO APPROVE COLOR PRIOR TO PAINTING.
8. POSTS SHALL BE PLACED AS SHOWN ON SITE PLAN.
9. ALL WELDS SHALL BE GROUND SMOOTH.
10. ALL HSS MEMBERS SHALL BE A500, GRADE B (F_y = 46 KSI). ALL OTHER STEEL TO BE A36 (F_y = 36 KSI).
11. ALL CONNECTION BOLTS TO BE A325. ANCHOR BOLTS TO BE F1554, GRADE 55.
12. POST CAPS TO MATCH THOSE USED ON CDOT PROJECT STU M040-011 (GRANDVIEW AVENUE BRIDGE OVER WADSWORTH BOULEVARD, ARVADA, CO) OR OWNER APPROVED EQUIVALENT. RE: 10B/A700.

ORNAMENTAL GUARDRAIL/HANDRAIL - STAIRS, NOTES:

1. POSTS, PICKETS, AND HORIZ. RAILS TO BE MILD STEEL.
2. CAST IRON PIECES BY KING ARCHITECTURAL METALS.
3. ALL COMPONENTS TO BE PAINTED BLACK (SHOP PAINTED W/ FIELD TOUCH-UPS USING POLYURETHANE PAINT).
4. WHEN ON SLOPING GRADE, RAILING TO BE INSTALLED W/ POSTS + PICKETS VERT. AND HORIZ. RAILS TO FOLLOW THE SLOPE.
5. POSTS TO BE SPACED EQUALLY ALONG STRAIGHT RUNS.
6. GRIND ALL WELDS SMOOTH.

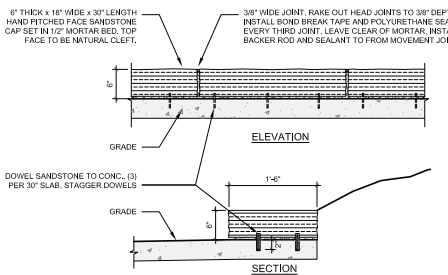

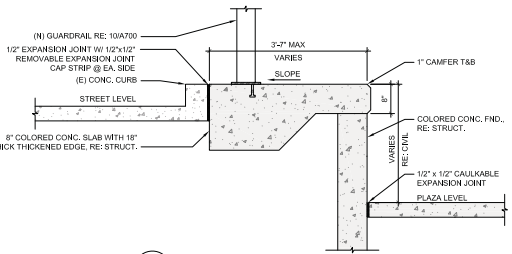

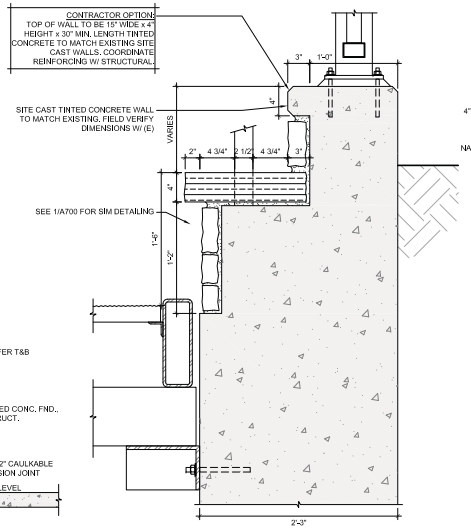

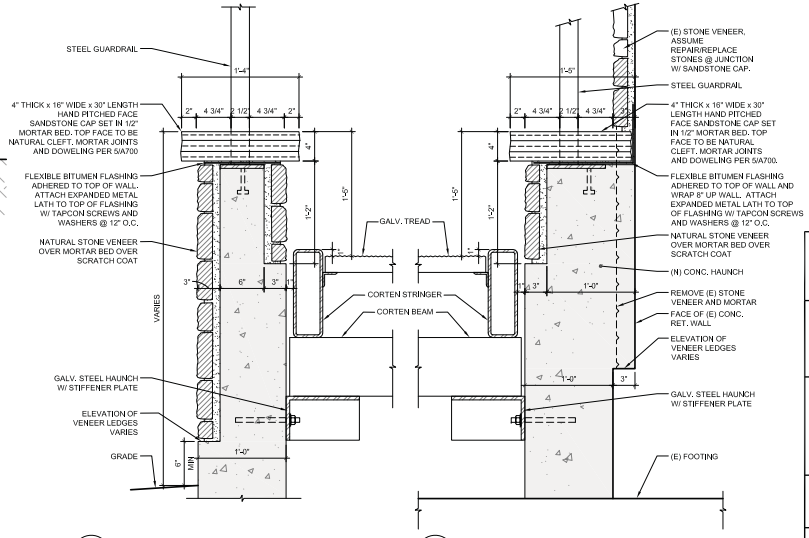

06/12/2020

NO.	DATE	REVISION
3	06/12/2020	PERMIT SUBMISSION
2	05/15/2020	90% CONSTRUCTION DOCUMENTS
1	04/10/2020	DD SUBMISSION

PEH ARCHITECTS
1720 14th Street Suite 100
Boulder, CO 80302
303-442-0408

GRAND STAIR ENTRANCE TO LIVERY LOT

GREGORY STREET
Black Hawk, CO 80422

SHEET TITLE
DETAILS

PROJECT:	2019.24
DATE:	11/04/19
DRAWN BY:	NAB
CHECKED BY:	PEH

SHEET NUMBER
A700

11 HANDRAIL — 3/4" = 1'-0"
10B GREGORY STREET ORNAMENTAL METAL GUARDRAIL CAP — 1-1/2" = 1'-0"
10 GREGORY STREET ORNAMENTAL METAL GUARDRAIL — 3/4" = 1'-0"
9 ORNAMENTAL GUARDRAIL/HANDRAIL - STAIRS — 3/4" = 1'-0"
12 HANDRAIL — 3/4" = 1'-0"
8 TOP OF STAIR DETAIL — 1" = 1'-0"
7 STAIR TREAD DETAIL — 1" = 1'-0"
6 BOTTOM OF STAIR DETAIL — 1" = 1'-0"
5 SANDSTONE CURB — 1" = 1'-0"
4 STREET RETAINING WALL — 3/4" = 1'-0"
3 STAIRS ATTACHMENT TO (N) WALL DETAIL — 1-1/2" = 1'-0"
2 STAIRS ATTACHMENT TO WALL DETAIL — 1-1/2" = 1'-0"
1 STAIRS ATTACHMENT TO WALL DETAIL — 1-1/2" = 1'-0"

GENERAL NOTES:

1. COMPLETION OF THE WORK: THE OWNER WILL REQUIRE THAT ALL OF THE WORK BE COMPLETED WITHIN THE TIME SPECIFIED IN THE CONTRACT.
2. CONSTRUCTION OBSERVATION: THE OWNER, ARCHITECT AND ENGINEER WILL REVIEW ALL SUBMITTALS AND SUBSTITUTIONS, PROVIDE REGULAR OBSERVATION OF THE PROJECT AND WILL MAKE CERTIFICATES FOR MONTHLY PROGRESS PAYMENTS. TIMELY NOTICE OF READINESS SHALL BE GIVEN TO THE OWNER BY THE CONTRACTOR WHENEVER ANY WORK IS TO BE SPECIFICALLY OBSERVED BY SOMEONE OTHER THAN THE CONTRACTOR. THIS TIMELY NOTICE SHALL BE DEFINED AS 48 HOURS.
3. CLEANING UP: THE CONTRACTOR SHALL MAINTAIN A CLEAN WORK AREA AT ALL TIMES AND WILL BE RESPONSIBLE FOR THE DAILY REMOVAL OF NUISANCE DUST ON ROAD SURFACES, MUD, AND CONSTRUCTION DEBRIS, WHETHER CAUSED DIRECTLY BY THE CONTRACTOR'S CONSTRUCTION OPERATION, OR THAT OF HIS/HER SUBCONTRACTORS AND/OR MATERIAL SUPPLIERS, OR INDIRECTLY DUE TO THE WORK SITE CONDITIONS IN GENERAL, FROM ALL PUBLIC ROADS, PRIVATE DRIVEWAYS, AND PARKING LOTS WITHIN OR ADJACENT TO THE PROJECT AREA. AT THE CLOSE OF WORK EACH DAY, THE CONTRACTOR SHALL SCRAPE AND SWEEP SUCH ROADS, DRIVEWAYS, AND PARKING LOTS AS NECESSARY TO LEAVE THEM IN A CLEANED, ACCEPTABLE CONDITION FOR TRAFFIC. THE CONTRACTOR WILL BE RESPONSIBLE FOR ANY DAMAGE DUE TO HIS MAINTENANCE AND/OR CLEANING OPERATIONS.
4. IT SHALL BE THE CONTRACTOR'S OBLIGATION TO INSPECT THE SOIL CONDITIONS AND/OR WATER LEVELS PRIOR TO SUBMITTING A BID. BY SUBMITTING A BID, THE CONTRACTOR ACKNOWLEDGES THAT HE HAS SATISFIED HIMSELF AS TO THE NATURE OF THE WORK INCLUDING, BUT NOT RESTRICTED TO, THE SOILS CONDITIONS AFFECTING CONSTRUCTION OF THE WORK, HANDLING AND STORAGE OF MATERIALS, DISPOSAL OF EXCESS MATERIALS AND LEVEL AND AMOUNT OF SURFACE WATER AND GROUNDWATER. THE CONTRACTOR SHALL BE RESPONSIBLE TO OBTAIN ANY SUBSURFACE INFORMATION DEEMED NECESSARY FOR CONSTRUCTION OF THIS PROJECT.
5. DISPOSAL SITES: THE CONTRACTOR SHALL BE RESPONSIBLE FOR DISPOSING OF ALL EXCESS MATERIAL REMOVED DURING CONSTRUCTION. ACQUISITION OF DISPOSAL SITES SHALL BE THE RESPONSIBILITY OF THE CONTRACTOR AND SHALL BE SUBJECT TO REVIEW BY THE OWNER.
6. TRAFFIC CONTROL PLAN: THE CONTRACTOR SHALL BE RESPONSIBLE FOR PROVIDING A TRAFFIC CONTROL PLAN TO THE CITY OF BLACK HAWK. THE CONTRACTOR SHALL PRESENT TO THE OWNER THE TRAFFIC CONTROL PLAN AND APPROVALS FROM THE NECESSARY ENTITIES PRIOR TO THE START OF CONSTRUCTION. THE CONTRACTOR SHALL PREPARE AND PROVIDE LIGHTS, BARRICADES, SIGNS, FLAG MEN, OR OTHER ITEMS NECESSARY TO ENSURE SAFE TRAFFIC FLOW IN THE VICINITY OF THE WORK AND TO CONFORM TO ALL REQUIREMENTS OF THE CITY OF BLACK HAWK.
7. MATERIALS FURNISHED BY OWNER: THE OWNER WILL NOT FURNISH LABOR, EQUIPMENT OR MATERIALS TO THE CONTRACTOR.
8. WATER: THE CONTRACTOR IS RESPONSIBLE AT THEIR OWN COST TO PROVIDE WATER FOR COMPACTION, WATER LINE FLUSHING AND TESTING. THE LOCATION OF THE WATER PROVIDED BY THE CONTRACTOR SHALL BE DESIGNATED BY THE PUBLIC WORKS DEPARTMENT AND/OR THE OWNER. THE CONTRACTOR SHALL MAKE ALL PROVISIONS TO HANDLE AND TRANSPORT WATER AS HE REQUIRES WITHOUT ADDITIONAL COST.
9. EXISTING UTILITIES: A SUBSURFACE UTILITY ENGINEERING PLAN WAS NOT COMPLETED FOR THIS PROJECT. THE APPROXIMATE LOCATIONS AND ELEVATIONS OF EXISTING UTILITIES HAVE BEEN INDICATED ON THE DRAWINGS FOR THE CONTRACTOR'S CONVENIENCE, BUT THE LOCATIONS ARE NOT GUARANTEED TO BE EITHER CORRECT OR COMPLETE, AND THE CONTRACTOR SHALL MAKE SUCH INVESTIGATIONS AS HE DEEMS NECESSARY TO VERIFY THE ACTUAL FIELD LOCATIONS AND ELEVATIONS. THE CONTRACTOR SHALL, PRIOR TO THE START OF EXCAVATION, LOCATE ALL UNDERGROUND UTILITIES AND STRUCTURES SO THAT THEY WILL NOT BE DAMAGED BY HIS OPERATIONS. THE APPROPRIATE UTILITY SHALL BE NOTIFIED AT LEAST 72 HOURS PRIOR TO COMMENCING ANY EXCAVATION. THE CONTRACTOR SHALL HOLD THE CITY OF BLACK HAWK & THE ENGINEER HARMLESS FOR ANY DISCREPANCIES OR CONFLICTS INVOLVING EXISTING UTILITIES AND/OR FOR DAMAGES ARISING FROM CONTRACTOR'S FAILURE TO ADEQUATELY PROTECT EXISTING UTILITIES.
10. PROTECTION OF PUBLIC AND PRIVATE PROPERTY: ALL STREETS, FENCES, SIDEWALKS, GRAVEL ROADWAYS, LANDSCAPING, RETAINING WALLS, ETC. DISTURBED BY THE CONTRACTOR DURING THE CONSTRUCTION OF THE WORK SHALL BE AT HIS EXPENSE, REPAIRED OR REPLACED AND LEFT IN AS GOOD CONDITION AS FOUND. PROPERTY DAMAGED BY THE CONTRACTOR SHALL BE IMMEDIATELY REPAIRED BY THE CONTRACTOR.
11. WHERE THE LOCATION OF THE WORK IN EASEMENTS AND RIGHT –OF–WAY IS SUCH THAT EXCAVATED MATERIAL MAY BE DEPOSITED ON LANDSCAPED AREAS, THE CONTRACTOR SHALL, AT HIS OWN EXPENSE, PROTECT THE LANDSCAPING AND CONSTRUCT BARRIERS AS NEEDED TO PREVENT INCIDENTAL CONTACT WITH THOSE AREAS BY HIS PERSONNEL AND EQUIPMENT. SPECIFIC RESTRICTED AREAS MAY BE NOTED ON THE DRAWINGS. THE CONTRACTOR SHALL TAKE ALL PRECAUTIONS NECESSARY TO PREVENT DAMAGE TO LANDSCAPED AREAS.
12. STATE AND LOCAL LAWS: THE CONTRACTOR SHALL CONFORM TO ALL APPLICABLE STATE AND LOCAL LAWS IN CARRYING OUT HIS OBLIGATIONS UNDER THE CONTRACT.
13. LIMITS OF CONSTRUCTION: THE CONTRACTOR SHALL LIMIT HIS CONSTRUCTION TO WITHIN THE BOUNDARIES OUTLINED WITHIN THE PLANS.
14. TRENCH EXCAVATION: THE OWNER EXPECTS TRENCH EXCAVATION WILL REQUIRE A COMBINATION OF BOTH STANDARD EXCAVATION WITH THE USE OF A HYDRAULIC BACKHOE OR SHOVEL AND ROCK EXCAVATION. THE CONTRACTOR SHALL INCLUDE THE COST OF BOTH STANDARD EXCAVATION AND ANY ROCK EXCAVATION THE CONTRACTOR EXPECTS TO BE REQUIRED FOR THE COMPLETION OF THIS PROJECT AS PART OF THE MATERIALS UNIT COSTS IN THE PROPOSAL. THE CONTRACTOR SHALL PROVIDE AND MAINTAIN AT ALL TIMES AMPLE MEANS AND DEVICES WITH WHICH TO REMOVE PROMPTLY AND TO PROPERLY DISPOSE OF ALL WATER ENTERING THE TRENCH EXCAVATION SO THAT PIPE LAYING, FORMING AND CONCRETE WORK CAN BE CARRIED ON UNDER DEWATERED CONDITIONS.
15. TRENCH MATERIAL: ALL BEDDING AND BACKFILL MATERIAL SHALL HAVE THE APPROVAL OF THE ENGINEER. APPROVED MATERIAL FROM PROJECT EXCAVATIONS SHALL BE USED FOR BACKFILL. ALL BEDDING AND BACKFILL MATERIAL SHALL BE FREE OF FROZEN MATERIAL, ORGANIC MATERIAL AND DEBRIS. THE MATERIALS TO BE USED IN EACH TRENCH ZONE ARE INDICATED IN THE TYPICAL TRENCH DETAILS SHOWN ON THE DRAWINGS AND THESE MATERIALS ARE DESCRIBED BELOW
    a. BACKFILL MATERIAL: COMMON BACKFILL MATERIAL SHALL CONSIST OF SUITABLE MATERIAL FROM THE EXCAVATED EARTH. NO BACKFILL MATERIAL SHALL HAVE BOULDERS LARGER THAN 12 INCHES IN ANY DIMENSION. NO BOULDERS OVER 6–INCHES IN ANY DIMENSION SHALL BE ALLOWED IN THE TOP 12 INCHES OF THE TRENCH. THE MATERIAL SHALL HAVE A MOISTURE CONTENT NOT EXCEEDING 3% OF OPTIMUM.
    b. SQUEEGEE BEDDING MATERIAL OR SQUEEGEE BACKFILL MATERIAL: SQUEEGEE MATERIAL SHALL BE A CLEAN GRANULAR MATERIAL MEETING THE FOLLOWING GRADATION: CRUSHER FINES MAY BE SUBSTITUTED AS AN ALTERNATE BEDDING MATERIAL.

SIEVE SIZE DESIGNATION	PERCENT BY WEIGHT PASSING
3/8–INCH	100
NO 200	0–5

16. PIPELINE INSULATION: THIS MATERIAL SHALL BE CLOSED CELL POLYSTYRENE FOAM OF THE MINIMUM COMPRESSIVE STRENGTH SPECIFIED HEREIN. WATER ABSORPTION SHALL BE NO MORE THAN 0.1% OF VOLUME WHEN TESTED ACCORDING TO ASTM C272. AGED (DESIGN) VALUE OF THERMAL CONDUCTIVITY SHALL BE 0.18 BTU IN/HR WHEN MEASURED AT A MEAN TEMPERATURE OF 25° F IN ACCORDANCE WITH ASTM C177 AND/OR WITH ASTM C518. MINIMUM THICKNESS SHALL BE 2–INCHES. INSULATION SHALL HAVE A MINIMUM COMPRESSIVE STRENGTH OF 40 PSI, SHALL BE DOW STYROFOAM HI-40 OR APPROVED EQUAL.
17. ASPHALT PAVEMENT: REPLACEMENT OF ASPHALTIC PAVEMENT SHALL BE PERFORMED IN ACCORDANCE WITH THE COLORADO DEPARTMENT OF TRANSPORTATION AND THE CITY OF BLACK HAWK STANDARDS. THE EXCAVATION IN AREAS WITH ASPHALT PAVING MUST BE CONFINED TO A MINIMUM WIDTH AS REQUIRED TO MAINTAIN A SAFE TRENCH CONDITION. THE PAVEMENT SHALL BE CUT VERTICAL AND ON A STRAIGHT LINE.

WATER SYSTEM NOTES:

1. CITY OF BLACK HAWK STANDARDS: THE CONSTRUCTION OF THE WATER SERVICE WORK IS SUBJECT TO THE STANDARDS OF THE CITY OF BLACK HAWK. THE CITY STANDARDS SHALL APPLY AS A MINIMUM IN CASE OF CONFLICT BETWEEN THESE SPECIFICATIONS AND THE ENGINEERING STANDARDS OF THE CITY, BUT THE MORE STRINGENT STANDARD SHALL BE FOLLOWED AS LONG AS THE MINIMUM CITY'S STANDARD HAS BEEN MET. MAINTAIN TEN FEET (10') MINIMUM HORIZONTAL SEPARATION BETWEEN THE WATER SERVICE AND SANITARY SEWER SERVICE UNLESS OTHERWISE APPROVED.
2. CONNECTIONS TO EXISTING WATER PIPELINE: ALL CONSTRUCTION INVOLVED IN CONNECTING TO THE EXISTING PIPELINES SHALL BE DONE IN THE PRESENCE OF THE CITY OF BLACK HAWK WATER DEPARTMENT. ALL CONSTRUCTION INVOLVED IN THE CONNECTING TO EXISTING PIPELINES SHALL BE SCHEDULED WITH AND APPROVED BY THE CITY. PROVIDING TEMPORARY THRUST RESTRAINT, AS REQUIRED, SHALL BE THE RESPONSIBILITY OF THE CONTRACTOR. THE CONTRACTOR SHALL COORDINATE THE REPLACEMENT OF THE EXISTING SERVICE CONNECTIONS WITH THE CITY. PROVIDE 24–HOUR MINIMUM NOTICE TO THE WATER DEPARTMENT FOR ANY INSPECTIONS AND OBSERVATIONS.
3. WATER SERVICES MATERIALS: MATERIALS FOR WATER SERVICE CONNECTIONS SHALL BE NEW AND THE BEST AVAILABLE. IN THE ABSENCE OF DETAIL INFORMATION, THE REQUIREMENTS OF AWWA C800 SHALL BE FOLLOWED.
    a. CORPORATION STOPS: ALL CORPORATION STOPS FOR COPPER PIPE SHALL BE SIMILAR AND EQUAL TO MH 15000, THREADED INLET, COMPRESSION COUPLING OUTLET, AS MANUFACTURED BY MUELLER COMPANY.
    b. COPPER PIPE: THE COPPER PIPE FOR ALL SERVICE CONNECTIONS SHALL CONFORM TO THE REQUIREMENTS SET FORTH IN ASTM B 88, OR ITS LATEST REVISION, AND SHALL BE TYPE K, SOFT ANNEALED.
    c. CURB VALVE AND BOX: A MUELLER 300 BALL CURB STOP VALVE SHALL BE USED. THE CURB STOP VALVE BOX SHALL BE SIMILAR AND EQUAL TO EA2–75–40–36, AS MANUFACTURED BY FORD, AND SHALL BE COMPLETE WITH LID AND STATIONARY ROD.
    d. SERVICE SADDLES: SERVICE SADDLES SHALL BE OF BRONZE CONSTRUCTION. SADDLES ON DIP SHALL BE DOUBLE–STRAP SIMILAR TO FORD S–90, MUELLER H–13400 SERIES, OR APPROVED EQUAL
4. INSTALLATION OF WATER SERVICES: WATER SERVICE LINES SHALL BE OF THE SAME TYPE MATERIAL FROM BEGINNING TO END WITHOUT FITTINGS BETWEEN THE CORPORATION STOP AND THE CURB STOP AND BETWEEN THE CURB STOP AND SHUT –OFF VALVE INSIDE THE HOUSE. UNLESS NOTED ELSEWHERE IN THE DRAWINGS, WATER SERVICE INSTALLATIONS SHALL BE CONSTRUCTED AS SHOWN IN THE DRAWINGS. ALL SERVICE LINE TAPS SHALL HAVE DOUBLE STRAP BRONZE SERVICE CLAMPS. WATER SERVICES SHALL BE ONE CONTINUOUS PIPE WITHOUT JOINTS OR SPLICES.
5. WATER PIPELINE DISINFECTING: ALL WATER PIPING INSTALLED UNDER THIS CONTRACT SHALL BE DISINFECTED IN ACCORDANCE WITH AWWA C651 AND THE STANDARDS OF THE CITY OF BLACK HAWK.
6. THE CONTRACTOR IS RESPONSIBLE, AT ITS COST, FOR PROVIDING WATER FOR CONSTRUCTION ACTIVITIES.
7. MINIMUM BURY DEPTH ON WATER MAIN IS 7 FEET.

SANITARY SEWER SYSTEM NOTES:

1. BLACK HAWK/CENTRAL CITY SANITATION DISTRICT STANDARDS: THE CONSTRUCTION OF THE SANITARY SEWER SERVICE WORK IS SUBJECT TO THE STANDARDS OF THE BLACK HAWK/CENTRAL CITY SANITATION DISTRICT (DISTRICT). THE DISTRICT STANDARDS SHALL APPLY AS A MINIMUM IN CASE OF CONFLICT BETWEEN THESE SPECIFICATIONS AND THE ENGINEERING STANDARDS OF THE DISTRICT, BUT THE MORE STRINGENT STANDARD SHALL BE FOLLOWED AS LONG AS THE MINIMUM DISTRICT'S STANDARD HAS BEEN MET.
2. SANITARY SERVICE CONNECTIONS: THE CONTRACTOR SHALL COORDINATE THE REPLACEMENT OF THE EXISTING SERVICE CONNECTIONS WITH THE CITY. A REPRESENTATIVE OF THE BLACK HAWK/CENTRAL CITY SANITATION DISTRICT MUST BE PRESENT TO WITNESS THE SANITARY SEWER CONNECTION AND/OR THE ABANDONING OF THE EXISTING SERVICE. THE CONTRACTOR SHALL PROVIDE 72–HOUR NOTICE TO THE DISTRICT.
3. SEWER SERVICE MATERIALS: MATERIALS FOR SEWER SERVICE CONNECTIONS SHALL BE NEW AND THE BEST AVAILABLE QUALITY.
    a. ACCORDING TO THE DISTRICT STANDARD, NEW SEWER PIPE AND FITTINGS SHALL BE GREEN POLYVINYL CHLORIDE (PVC), SDR 26 MINIMUM THICKNESS CONFORMING TO ASTM D3034.
    b. SERVICE LINE CLEAN OUTS, WHERE REQUIRED, SHALL CONFORM TO THE "SERVICE LINE CLEAN OUT DETAIL". CLEAN OUTS ARE REQUIRED FOR ANY SIGNIFICANT (GREATER THAN 45° DEFLECTION) CHANGE IN THE SERVICE LINE DIRECTION AND AT INTERVALS NO GREATER THAN 100 FEET OR AS REQUIRED BY THE LOCAL BUILDING AUTHORITY.
    c. THE SIZE AND SLOPE OF THE SERVICE SEWER SHALL BE SUBJECT TO THE APPROVAL OF THE DISTRICT, BUT IN NO EVENT SHALL THE DIAMETER BE LESS THAN 4 INCHES WITH A MINIMUM GRADE OF 2%.
    d. PIPE LAYING SHALL PROCEED UPGRADE WITH THE SPIGOT ENDS OF PIPE POINTING IN THE DIRECTION OF THE FLOW, UNLESS OTHERWISE APPROVED BY THE ENGINEER. EACH PIPE LENGTH SHALL BE LAID TRUE TO LINE AND GRADE IN SUCH MANNER AS TO FORM A CLOSE CONCENTRIC JOINT WITH THE ADJOINING PIPE AND TO PREVENT SUDDEN OFFSETS TO THE FLOW LINE. PIPE SHALL BE LAID IN AN UN–WATERED TRENCH AND SHALL NOT BE USED FOR DRAINING WATER FROM THE TRENCH.
4. PROTECTION OF POTABLE WATER PIPELINES: THE CONTRACTOR SHALL USE PVC PIPE CONFORMING TO ASTM D2241, WITH A THICKNESS NOT LESS THAN C900 DR–18 AS ENCASEMENT WHEN A SANITARY SEWER PIPELINE CROSSES AN EXISTING WATER PIPELINE OR THE SANITARY SEWER PIPELINE IS FOUND TO BE LESS THAN 10 FEET HORIZONTALLY FROM A WATER PIPELINE WHICH IS PARALLEL OR CONVERGING TO THE SEWER PIPELINE. THE LENGTH OF THE ENCASEMENT SHALL BE SUCH THAT THE PORTION OF THE SEWER PIPELINE THAT IS NOT ENCASED IS 10 FEET OR GREATER APART HORIZONTALLY ON BOTH SIDES OF THE WATER PIPELINE. COSTS SHALL BE INCLUDED IN THE WORK.
5. PIPELINE FLUSHING: THE CONTRACTOR SHALL FLUSH THE PIPELINES, AS THE WORK PROGRESSES, BY MEANS THAT ARE IN ACCORDANCE WITH THE BLACK HAWK/CENTRAL CITY SANITATION DISTRICT STANDARDS, TO ENSURE THAT EARTH, SAND, ROCKS OR OTHER FOREIGN MATERIALS ARE REMOVED FROM THE INTERIOR OF THE PIPELINE. COORDINATE WITH PUBLIC WORKS AND THE SANITATION DISTRICT.
6. LEAKAGE: THE CONTRACTOR SHALL PERFORM A LEAKAGE TEST WITH THE PRESENCE OF THE ENGINEER AND A REPRESENTATIVE OF THE CENTRAL CITY /BLACK HAWK SANITATION DISTRICT.

ELECTRICAL/ GAS/ COMMUNICATION:

1. GENERAL: BEFORE BEGINNING CONSTRUCTION, THE CONTRACTOR SHALL BE RESPONSIBLE FOR NOTIFYING ALL AFFECTED UTILITY COMPANIES TO FIELD VERIFY ALL UTILITY LOCATIONS IN THE PROJECT AREA. THE CONTRACTOR IS RESPONSIBLE FOR LOCATING AND PROTECTING ALL UTILITIES IN THE PROJECT AREA. THE CONTRACTOR IS ALSO RESPONSIBLE FOR COORDINATING WITH THE UTILITY COMPANIES FOR RELOCATION OF ANY UTILITIES SHOWN ON THE PLANS. THE ENGINEER HAS ENDEAVORED TO LOCATE AND SHOW ON THE PLANS THE APPROXIMATE LOCATIONS OF ALL PRIVATE AND PUBLIC UTILITIES AND FACILITIES TO BE ENCOUNTERED DURING CONSTRUCTION. HOWEVER, IT IS POSSIBLE THAT DURING THE WORK UNKNOWN SUBSTRUCTURES REQUIRING RELOCATION OR PROTECTION MAY BE ENCOUNTERED. IN THE EVENT EITHER THE PROTECTION OR THE RELOCATION IS TO BE ACCOMPLISHED BY THE CONTRACTOR, THE PROCEDURES OF THE GENERAL PROVISIONS SHALL BE USED. IN THE EVENT PROTECTION OR RELOCATION IS ACCOMPLISHED BY THE CITY OR BY OTHERS, THE CONTRACTOR SHALL PROVIDE TIME AND WORKING SPACE AND MAY BE ENTITLED TO AN EXTENSION OF TIME FOR COMPLETION UNDER THE APPROVAL OF THE CITY.
2. GAS SERVICE: THE CONTRACTOR SHALL COORDINATE PROPOSED WORK FOR THE EXISTING GAS SERVICE AS SHOWN ON THE PLAN. COORDINATION, MEETINGS, AND ANY OTHER TIME OR MATERIALS ASSOCIATED WITH COORDINATION SHALL BE INCLUDED IN THE COST OF THE PROPOSED LUMP SUM WORK ITEM AND WILL NOT BE PAID FOR SEPARATELY. THE LOCAL GAS COMPANY, XCEL ENERGY, MAY PROVIDE ADDITIONAL ON–SITE DIRECTION FOR ANY WORK ASSOCIATED WITH GAS AND/OR ELECTRICAL SERVICES. THE LOCAL CONTACT FOR XCEL ENERGY IS JEANNIE AGRIESTI, (303) 445–4549.
3. THE CONTRACTOR IS RESPONSIBLE, AT ITS COST, FOR PROVIDING ELECTRICAL SERVICE FOR CONSTRUCTION ACTIVITIES.

GRADING NOTES:

1. GRADING SHALL OCCUR WITHIN THE PROPERTY LIMITS. WHERE OFF–SITE WORK IS APPROVED, WRITTEN PERMISSION OF THE ADJACENT PROPERTY OWNER MUST BE OBTAINED PRIOR TO ANY OFF–SITE GRADING OR CONSTRUCTION.
2. ALL SIDEWALK SHALL HAVE A 2% MAXIMUM CROSS SLOPE.
3. ALL RAMPS AND STAIRCASES SHALL BE ADA COMPLIANT.
4. ALL PUBLIC CURB SHALL BE 6" IN HEIGHT AND GUTTER SHALL BE 2' WIDE.
5. VEGETATED SLOPES GREATER THAN 2:1 REQUIRE SOIL STABILIZATION.

EROSION & SEDIMENT CONTROL NOTES:

1. EROSION CONTROL MEASURES SHALL BE IN PLACE PRIOR TO COMMENCEMENT OF GRADING AND SHALL BE MAINTAINED THROUGHOUT CONSTRUCTION. ADDITIONAL MEASURES MAY BE REQUIRED DURING CONSTRUCTION AND SHALL BE INSTALLED AT THE DIRECTION OF THE CITY ENGINEER/PUBLIC WORKS DIRECTOR OR HIS REPRESENTATIVE.
2. AT A MINIMUM, THE CONTRACTOR OR HIS AGENT SHALL INSPECT ALL EROSION AND SEDIMENT CONTROL MEASURES EVERY 7 DAYS AND AFTER EVERY PRECIPITATION EVENT. EROSION AND SEDIMENT CONTROL FORMS SHALL BE COMPLETED WEEKLY AND FAXED/EMAILED TO THE CITY INSPECTOR.
3. IT SHALL BE THE RESPONSIBILITY OF THE CONTRACTOR TO PREVENT SEDIMENT, DEBRIS AND ALL POLLUTANTS FROM ENTERING THE STORM SEWER SYSTEM DURING GRADING AND CONSTRUCTION OPERATIONS. CONTRACTOR SHALL BE RESPONSIBLE FOR REMEDIATION OF ANY ADVERSE IMPACTS TO WATERWAYS, WETLANDS, OTHER PROPERTIES AND RIGHTS–OF–WAY RESULTING FROM WORK DONE AS PART OF THIS PROJECT. ALL SEDIMENT, SILT, MUD AND CONSTRUCTION DEBRIS THAT MOVES BEYOND THE PROPERTY LIMITS MUST BE IMMEDIATELY REMOVED

STREET IMPROVEMENT NOTES:

1. ALL WORK WITHIN THE PUBLIC RIGHT–OF–WAY AND EASEMENTS SHALL CONFORM TO THE CITY OF BLACK HAWK ENGINEERING REGULATIONS, CONSTRUCTION SPECIFICATIONS, AND DESIGN STANDARDS.
2. A WORK IN PUBLIC WAYS PERMIT IS REQUIRED FOR ALL WORK IN THE PUBLIC RIGHTS–OF–WAY. IN ADDITION, ANY WORK PERFORMED WITHIN STATE RIGHTS–OF–WAY WILL REQUIRE A STATE PERMIT.
3. THE CONTRACTOR SHALL CONTACT THE UTILITY NOTIFICATION CENTER OF COLORADO (1–800–922–1987) AND OTHER AFFECTED UTILITIES TO LOCATE UNDERGROUND FACILITIES AT LEAST 48 HOURS PRIOR TO COMMENCEMENT OF CONSTRUCTION.
4. THE CONTRACTOR SHALL NOTIFY THE CITY INSPECTOR 24 HOURS PRIOR TO STARTING WORK AND 24 HOURS PRIOR TO EACH DESIRED AND REQUIRED INSPECTION.
5. THE CONTRACTOR SHALL BE SOLELY AND COMPLETELY RESPONSIBLE FOR CONDITIONS AT AND ADJACENT TO THE JOB SITE, INCLUDING SAFETY OF ALL PERSONS AND PROPERTY DURING PERFORMANCE OF THE WORK. THIS REQUIREMENT SHALL APPLY CONTINUOUSLY AND NOT BE LIMITED TO NORMAL WORKING HOURS AND INCLUDES TRAFFIC CONTROL IN ACCORDANCE WITH THE MANUAL ON UNIFORM TRAFFIC CONTROL DEVICES. THE CITY'S REVIEW OF PLANS AND CONSTRUCTION IS NOT INTENDED TO INCLUDE REVIEW OF THE ADEQUACY OF THE SAFETY MEASURES IN, ON, OR NEAR THE CONSTRUCTION SITE.
6. IT SHALL BE THE RESPONSIBILITY OF THE DEVELOPER DURING CONSTRUCTION ACTIVITIES TO RESOLVE CONSTRUCTION PROBLEMS DUE TO CHANGED CONDITIONS OR DESIGN ERRORS ENCOUNTERED BY THE CONTRACTOR DURING THE PROGRESS OF ANY PORTION OF THE WORK. IF, IN THE OPINION OF THE CITY'S INSPECTOR, THE MODIFICATIONS PROPOSED BY THE DEVELOPER TO THE APPROVED PLANS INVOLVE SIGNIFICANT CHANGES TO THE CHARACTER OF THE WORK OR TO FUTURE CONTIGUOUS PUBLIC OR PRIVATE IMPROVEMENTS, THE DEVELOPER SHALL BE RESPONSIBLE TO REVISE PLANS AND SUBMIT THEM TO THE CITY FOR APPROVAL PRIOR TO ANY FURTHER CONSTRUCTION RELATED TO THAT PORTION OF THE WORK. ANY IMPROVEMENTS NOT CONSTRUCTED IN ACCORDANCE WITH THE APPROVED PLANS, OR THE APPROVED REVISED PLANS, SHALL BE REMOVED AND THE IMPROVEMENTS SHALL BE RECONSTRUCTED AT NO COST TO THE CITY.
7. THE CONTRACTOR SHALL PROVIDE ACCESS TO AND FROM ALL PRIVATE PROPERTY ADJACENT TO THE WORK THROUGHOUT THE PERIOD OF CONSTRUCTION.
8. RELOCATE ALL UTILITY POLES PRIOR TO PLACEMENT OF CONCRETE. XCEL ELECTRIC POLE RELOCATIONS ARE COORDINATED THROUGH THE CITY AND REQUIRE A MINIMUM OF 160 DAYS WRITTEN NOTICE TO THE CITY'S TRAFFIC ENGINEERING DIVISION FOR RELOCATION.
9. ADJUST RIMS OF ALL CLEANOUTS, MANHOLES, VALVE COVERS AND SURVEY MONUMENTS TO FINISHED GRADE AND CROSS–SLOPE PRIOR TO FINAL LIFT OF PAVING.
10. PRIOR TO FINAL PLACEMENT OF SURFACE PAVEMENT, ALL UNDERGROUND UTILITY FACILITIES AND STREET LIGHTING SHALL BE INSTALLED AND SERVICE CONNECTIONS STUBBED OUT BEYOND CURB LINE. SERVICE FROM PUBLIC UTILITIES AND FROM SANITARY SEWERS SHALL BE MADE AVAILABLE FOR EACH LOT IN SUCH A MANNER THAT IT WILL NOT BE NECESSARY TO DISTURB THE STREET PAVEMENT, CURB, GUTTER, AND SIDEWALK WHEN CONNECTIONS ARE MADE.
11. ALL ABOVE–GROUND OBJECTS SHALL BE LOCATED AT LEAST TWO FEET FROM THE EDGE OF ALL SIDEWALKS AND BIKE PATHS. SUCH OBJECTS INCLUDE UTILITY BOXES AND POLES, BUS BENCHES AND SHELTERS, RETAINING WALLS, ETC.
12. SURVEY MONUMENTS MUST BE SET PRIOR TO CITY ACCEPTANCE OF THE IMPROVEMENTS.
13. PERMISSION TO REPRODUCE THESE PLANS IS HEREBY EXPRESSLY GIVEN TO THE CITY OF BLACK HAWK FOR CITY PURPOSES ASSOCIATED WITH PLAN REVIEW, APPROVAL, PERMITTING, INSPECTION AND CONSTRUCTION OF THE WORK.

LEGEND

EXISTING LINETYPES	PROPOSED LINETYPES	
81	81	MINOR CONTOUR (1' INTERVAL)
5280	5280	MAJOR CONTOUR (5' INTERVAL)
		PROPERTY BOUNDARY
		EDGE OF ASPHALT
		EDGE OF GRAVEL
		CURB AND GUTTER (SPILL/CATCH)
		EDGE OF BUILDING
		RETAINING WALL
		USER LINETYPE
		DITCH FLOWLINE

EXISTING SYMBOLS	PROPOSED SYMBOLS	
25.44	25.36	SPOT ELEVATION
3:1	3:1	NOMINAL SLOPE ON CUT OR FILL
		FLOW DIRECTION, TYPICALLY ON PAVED SURFACES
		FLOW DIRECTION, TYPICALLY IN GRASSED SWALE
S	S	SANITARY MANHOLE
		TYPE 'R' INLET
		TYPE '13' VALLEY INLET
		DECIDUOUS TREE
		LIGHT POLE
		ELECTRIC PEDESTAL
		SIGN

PROPOSED HATCHES

- COLORED CONCRETE PAVING
- EZ PAVER REMOVAL AND REPLACEMENT

EROSION CONTROL LEGEND

- SEDIMENT CONTROL LOG (SCL)
- INLET PROTECTION (TYPE R/VALLEY) (IP)
- ROCK SOCK (RS)

ABBREVIATIONS

LP	LOW POINT ELEVATION
FG	FINISHED GRADE ELEVATION
ME	MATCH EXISTING ELEVATION
TW	ELEVATION ADJACENT TO TOP OF WALL
BW	ELEVATION ADJACENT TO BOTTOM OF WALL
SL	ELEVATION AT STAIR LANDING
EX	EXISTING
DEMO	DEMOLISH
CONST	CONSTRUCT

1
C100 C100 GENERAL NOTES & LEGEND

NO.	DATE	REVISION
3	6/12/20	PERMIT SUBMISSION
2	5/15/20	90% CD SUBMISSION
1	4/09/20	SCHEMATIC DESIGN

PEH ARCHITECTS
1720 14th Street Suite 100
Boulder, CO 80302
303-442-0408

GRAND STAIR
ENTRANCE TO LIVERY LOT

221 GREGORY ST
Black Hawk, CO 80422

SHEET TITLE
GENERAL NOTES & LEGEND

PROJECT:	CO3444
DATE:	03/31/20
DRAWN BY:	JTP
CHECKED BY:	SMB

SHEET NUMBER
C100

N:\CO3444 – GRAND STAIR CASE\DRAWINGS\CONSTRUCTION DOCUMENTS\3444–GESC.DWG – 6/12/20 – Jordan Plaskey

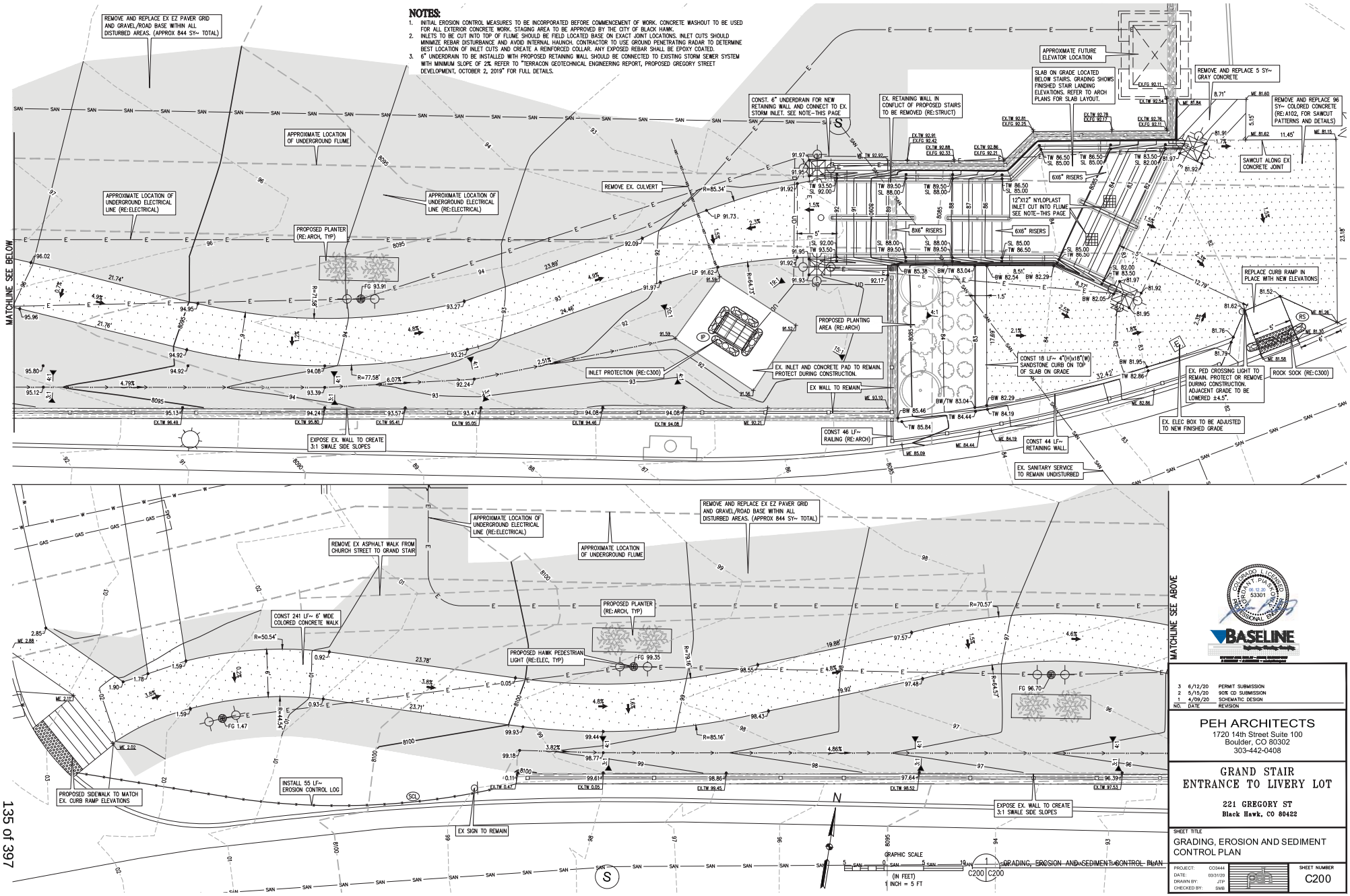

NO.	DATE	REVISION
3	6/12/20	PERMIT SUBMISSION
2	5/15/20	90% CD SUBMISSION
1	4/09/20	SCHEMATIC DESIGN

PEH ARCHITECTS
1720 14th Street Suite 100
Boulder, CO 80302
303-442-0408

GRAND STAIR ENTRANCE TO LIVERY LOT

221 GREGORY ST
Black Hawk, CO 80422

SHEET TITLE
GRADING, EROSION AND SEDIMENT CONTROL PLAN

PROJECT:	CO3444
DATE:	03/31/20
DRAWN BY:	JTP
CHECKED BY:	SMB

SHEET NUMBER C200

N:\CO3444 - GRAND STAIR CASE\DRAWINGS\CONSTRUCTION DOCUMENTS\3444-GESC.DWG - 6/12/20 - Jordan Plaskoy

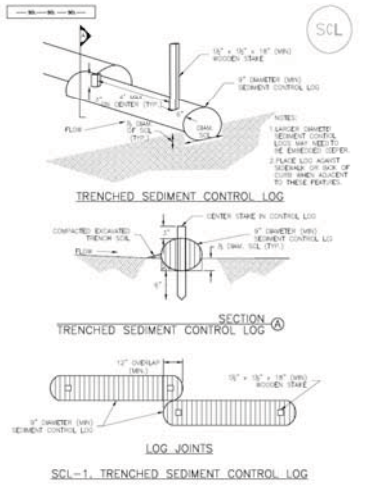

SCL-1. TRENCHED SEDIMENT CONTROL LOG

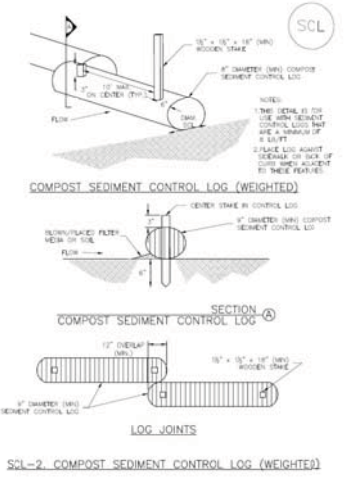

SCL-2. COMPOST SEDIMENT CONTROL LOG (WEIGHTED)

SEDIMENT CONTROL LOG INSTALLATION NOTES

1. SEE PLAN VIEW FOR LOCATION AND LENGTH OF SEDIMENT CONTROL LOGS.

2. SEDIMENT CONTROL LOGS THAT ACT AS A PERIMETER CONTROL SHALL BE INSTALLED PRIOR TO ANY UPGRADIENT LAND-DISTURBING ACTIVITIES.

3. SEDIMENT CONTROL LOGS SHALL CONSIST OF STRAW, COMPOST, EXCELSIOR OR COCOUT FIBER, AND SHALL BE FREE OF ANY NOXIOUS WEED SEEDS OR DEFECTS INCLUDING RIPS HOLES AND OBVIOUS WEAR.

4. SEDIMENT CONTROL LOGS MAY BE USED AS SMALL CHECK DAMS IN DITCHES AND SWALES. HOWEVER, THEY SHOULD NOT BE USED IN PERENNIAL STREAMS.

5. IT IS RECOMMENDED THAT SEDIMENT CONTROL LOGS BE TRENCHED INTO THE GROUND TO A DEPTH OF APPROXIMATELY ⅓ OF THE DIAMETER OF THE LOG. IF TRENCHING TO THIS DEPTH IS NOT FEASIBLE AND/OR DESIRABLE (SHORT TERM INSTALLATION WITH DESIRE NOT TO DAMAGE LANDSCAPE) A LESSER TRENCHING DEPTH MAY BE ACCEPTABLE WITH MORE ROBUST STAKING. COMPOST LOGS THAT ARE 8 LB/FT DO NOT NEED TO BE TRENCHED.

6. THE UPHILL SIDE OF THE SEDIMENT CONTROL LOG SHALL BE BACKFILLED WITH SOIL OR FILTER MATERIAL THAT IS FREE OF ROCKS AND DEBRIS. THE SOIL SHALL BE TIGHTLY COMPACTED INTO THE SHAPE OF A RIGHT TRIANGLE USING A SHOVEL OR WEIGHTED LAWN ROLLER OR BLOWN IN PLACE.

7. FOLLOW MANUFACTURERS' GUIDANCE FOR STAKING. IF MANUFACTURERS' INSTRUCTIONS DO NOT SPECIFY SPACING, STAKES SHALL BE PLACED ON 4' CENTERS AND EMBEDDED A MINIMUM OF 6" INTO THE GROUND. 3" OF THE STAKE SHALL PROTRUDE FROM THE TOP OF THE LOG. STAKES THAT ARE BROKEN PRIOR TO INSTALLATION SHALL BE REPLACED. COMPOST LOGS SHOULD BE STAKED 10' ON CENTER.

SEDIMENT CONTROL LOG MAINTENANCE NOTES

1. INSPECT BMPs EACH WORKDAY, AND MAINTAIN THEM IN EFFECTIVE OPERATING CONDITION. MAINTENANCE OF BMPs SHOULD BE PROACTIVE, NOT REACTIVE. INSPECT BMPs AS SOON AS POSSIBLE (AND ALWAYS WITHIN 24 HOURS) FOLLOWING A STORM THAT CAUSES SURFACE EROSION, AND PERFORM NECESSARY MAINTENANCE.

2. FREQUENT OBSERVATIONS AND MAINTENANCE ARE NECESSARY TO MAINTAIN BMPs IN EFFECTIVE OPERATING CONDITION. INSPECTIONS AND CORRECTIVE MEASURES SHOULD BE DOCUMENTED THOROUGHLY.

3. WHERE BMPs HAVE FAILED, REPAIR OR REPLACEMENT SHOULD BE INITIATED UPON DISCOVERY OF THE FAILURE.

4. SEDIMENT ACCUMULATED UPSTREAM OF SEDIMENT CONTROL LOG SHALL BE REMOVED AS NEEDED TO MAINTAIN FUNCTIONALITY OF THE BMP, TYPICALLY WHEN DEPTH OF ACCUMULATED SEDIMENTS IS APPROXIMATELY ½ OF THE HEIGHT OF THE SEDIMENT CONTROL LOG.

5. SEDIMENT CONTROL LOG SHALL BE REMOVED AT THE END OF CONSTRUCTION. COMPOST FROM COMPOST LOGS MAY BE LEFT IN PLACE AS LONG AS BAGS ARE REMOVED AND THE AREA SEEDED. IF DISTURBED AREAS EXIST AFTER REMOVAL, THEY SHALL BE COVERED WITH TOP SOIL, SEEDED AND MULCHED OR OTHERWISE STABILIZED IN A MANNER APPROVED BY THE LOCAL JURISDICTION.

[DETAILS ADAPTED FROM TOWN OF PARKER, COLORADO, JEFFERSON COUNTY, COLORADO, DOUGLAS COUNTY, COLORADO, AND CITY OF AURORA, COLORADO, NOT AVAILABLE IN AUTOCAD]

NOTE: MANY JURISDICTIONS HAVE BMP DETAILS THAT VARY FROM UDFCD STANDARD DETAILS. CONSULT WITH LOCAL JURISDICTIONS AS TO WHICH DETAIL SHOULD BE USED WHEN DIFFERENCES ARE NOTED.

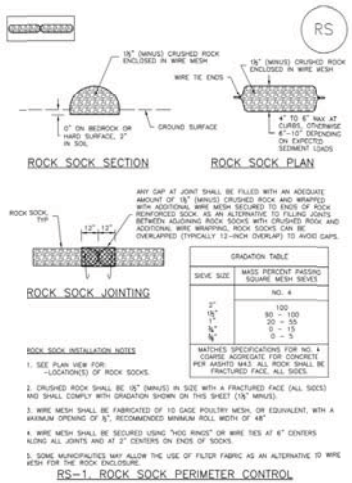

ROCK SOCK INSTALLATION NOTES

1. SEE PLAN VIEW FOR LOCATION(S) OF ROCK SOCKS.

2. CRUSHED ROCK SHALL BE 1½" (MINUS) IN SIZE WITH A FRACTURED FACE (ALL SIDES) AND SHALL COMPLY WITH GRADATION SHOWN ON THIS SHEET (1½" MINUS).

3. WIRE MESH SHALL BE FABRICATED OF 10 GAGE POULTRY MESH, OR EQUIVALENT, WITH A MAXIMUM OPENING OF ½". RECOMMENDED MINIMUM ROLL WIDTH OF 48".

4. WIRE MESH SHALL BE SECURED USING "HOG RINGS" OR WIRE TIES AT 6" CENTERS ALONG ALL JOINTS AND AT 2' CENTERS ON ENDS OF SOCKS.

5. SOME MUNICIPALITIES MAY ALLOW THE USE OF FILTER FABRIC AS AN ALTERNATIVE TO WIRE MESH FOR THE ROCK ENCLOSURE.

RS-1. ROCK SOCK PERIMETER CONTROL

ROCK SOCK MAINTENANCE NOTES

1. INSPECT BMPs EACH WORKDAY, AND MAINTAIN THEM IN EFFECTIVE OPERATING CONDITION. MAINTENANCE OF BMPs SHOULD BE PROACTIVE, NOT REACTIVE. INSPECT BMPs AS SOON AS POSSIBLE (AND ALWAYS WITHIN 24 HOURS) FOLLOWING A STORM THAT CAUSES SURFACE EROSION, AND PERFORM NECESSARY MAINTENANCE.

2. FREQUENT OBSERVATIONS AND MAINTENANCE ARE NECESSARY TO MAINTAIN BMPs IN EFFECTIVE OPERATING CONDITION. INSPECTIONS AND CORRECTIVE MEASURES SHOULD BE DOCUMENTED THOROUGHLY.

3. WHERE BMPs HAVE FAILED, REPAIR OR REPLACEMENT SHOULD BE INITIATED UPON DISCOVERY OF THE FAILURE.

4. ROCK SOCKS SHALL BE REPLACED IF THEY BECOME HEAVILY SOILED, OR DAMAGED BEYOND REPAIR.

5. SEDIMENT ACCUMULATED UPSTREAM OF ROCK SOCKS SHALL BE REMOVED AS NEEDED TO MAINTAIN FUNCTIONALITY OF THE BMP, TYPICALLY WHEN DEPTH OF ACCUMULATED SEDIMENTS IS APPROXIMATELY ½ OF THE HEIGHT OF THE ROCK SOCK.

6. ROCK SOCKS ARE TO REMAIN IN PLACE UNTIL THE UPSTREAM DISTURBED AREA IS STABILIZED AND APPROVED BY THE LOCAL JURISDICTION.

7. WHEN ROCK SOCKS ARE REMOVED, ALL DISTURBED AREAS SHALL BE COVERED WITH TPSOIL, SEEDED AND MULCHED OR OTHERWISE STABILIZED AS APPROVED BY LOCAL JURISDICTION.

[DETAIL ADAPTED FROM TOWN OF PARKER, COLORADO AND CITY OF AURORA, COLORADO, NOT AVAILABLE IN AUTOCAD]

NOTE: MANY JURISDICTIONS HAVE BMP DETAILS THAT VARY FROM UDFCD STANDARD DETAILS. CONSULT WITH LOCAL JURISDICTIONS AS TO WHICH DETAIL SHOULD BE USED WHEN DIFFERENCES ARE NOTED.

NOTE: THE DETAILS INCLUDED WITH THIS FACT SHEET SHOW COMMONLY USED, CONVENTIONAL METHODS OF ROCK SOCK INSTALLATION IN THE DENVER METROPOLITAN AREA. THERE ARE MANY OTHER SIMILAR PROPRIETARY PRODUCTS ON THE MARKET. UDFCD NEITHER ENDORSES NOR DISCOURAGES USE OF PROPRIETARY PROTECTION PRODUCTS; HOWEVER, IN THE EVENT PROPRIETARY METHODS ARE USED, THE APPROPRIATE DETAIL FROM THE MANUFACTURER MUST BE INCLUDED IN THE SWMP AND THE BMP MUST BE INSTALLED AND MAINTAINED AS SHOWN IN THE MANUFACTURER'S DETAILS.

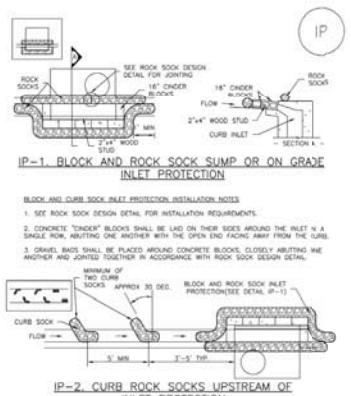

BLOCK AND CURB SOCK INLET PROTECTION INSTALLATION NOTES

1. SEE ROCK SOCK DESIGN DETAIL FOR INSTALLATION REQUIREMENTS.

2. CONCRETE "CINDER" BLOCKS SHALL BE LAID ON THEIR SIDES AROUND THE INLET IN A SINGLE ROW, ABUTTING ONE ANOTHER WITH THE OPEN END FACING AWAY FROM THE CURB.

3. GRAVEL BAGS SHALL BE PLACED AROUND CONCRETE BLOCKS, CLOSELY ABUTTING ONE ANOTHER AND JOINTED TOGETHER IN ACCORDANCE WITH ROCK SOCK DESIGN DETAIL.

CURB ROCK SOCK INLET PROTECTION INSTALLATION NOTES

1. SEE ROCK SOCK DESIGN DETAIL INSTALLATION REQUIREMENTS.

2. PLACEMENT OF THE SOCK SHALL BE APPROXIMATELY 30 DEGREES FROM PERPENDICULAR IN THE OPPOSITE DIRECTION OF FLOW.

3. SOCKS ARE TO BE FLUSH WITH THE CURB AND SPACED A MINIMUM OF 5 FEET APART.

4. AT LEAST TWO CURB SOCKS IN SERIES ARE REQUIRED UPSTREAM OF ON-GRADE INLETS.

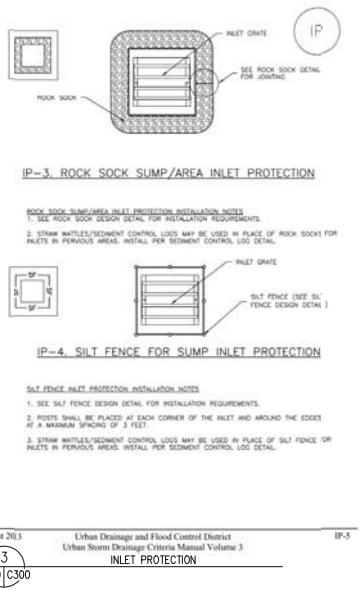

ROCK SOCK SUMP/AREA INLET PROTECTION INSTALLATION NOTES

1. SEE ROCK SOCK DESIGN DETAIL FOR INSTALLATION REQUIREMENTS.

2. STRAW WATTLES/SEDIMENT CONTROL LOGS MAY BE USED IN PLACE OF ROCK SOCKS FOR INLETS IN PERVIOUS AREAS. INSTALL PER SEDIMENT CONTROL LOG DETAIL.

SILT FENCE INLET PROTECTION INSTALLATION NOTES

1. SEE SILT FENCE DESIGN DETAIL FOR INSTALLATION REQUIREMENTS.

2. POSTS SHALL BE PLACED AT EACH CORNER OF THE INLET AND AROUND THE EDGES AT A MAXIMUM SPACING OF 3 FEET.

3. STRAW WATTLES/SEDIMENT CONTROL LOGS MAY BE USED IN PLACE OF SILT FENCE FOR INLETS IN PERVIOUS AREAS. INSTALL PER SEDIMENT CONTROL LOG DETAIL.

GENERAL INLET PROTECTION INSTALLATION NOTES

1. SEE PLAN VIEW FOR:
   -LOCATION OF INLET PROTECTION.
   -TYPE OF INLET PROTECTION (IP-1, IP-2, IP-3, IP-4, IP-5, IP-6)

2. INLET PROTECTION SHALL BE INSTALLED PROMPTLY AFTER INLET CONSTRUCTION OR PAVING IS COMPLETE (TYPICALLY WITHIN 48 HOURS). IF A RAINFALL/RUNOFF EVENT IS FORECAST, INSTALL INLET PROTECTION PRIOR TO ONSET OF EVENT.

3. MANY JURISDICTIONS HAVE BMP DETAILS THAT VARY FROM UDFCD STANDARD DETAILS. CONSULT WITH LOCAL JURISDICTIONS AS TO WHICH DETAIL SHOULD BE USED WHEN DIFFERENCES ARE NOTED.

INLET PROTECTION MAINTENANCE NOTES

1. INSPECT BMPs EACH WORKDAY, AND MAINTAIN THEM IN EFFECTIVE OPERATING CONDITION. MAINTENANCE OF BMPs SHOULD BE PROACTIVE, NOT REACTIVE. INSPECT BMPs AS SOON AS POSSIBLE (AND ALWAYS WITHIN 24 HOURS) FOLLOWING A STORM THAT CAUSES SURFACE EROSION, AND PERFORM NECESSARY MAINTENANCE.

2. FREQUENT OBSERVATIONS AND MAINTENANCE ARE NECESSARY TO MAINTAIN BMPs IN EFFECTIVE OPERATING CONDITION. INSPECTIONS AND CORRECTIVE MEASURES SHOULD BE DOCUMENTED THOROUGHLY.

3. WHERE BMPs HAVE FAILED, REPAIR OR REPLACEMENT SHOULD BE INITIATED UPON DISCOVERY OF THE FAILURE.

4. SEDIMENT ACCUMULATED UPSTREAM OF INLET PROTECTION SHALL BE REMOVED AS NECESSARY TO MAINTAIN BMP EFFECTIVENESS, TYPICALLY WHEN STORAGE VOLUME REACHES 50% OF CAPACITY, A DEPTH OF 6" WHEN SILT FENCE IS USED, OR ¼ OF THE HEIGHT FOR STRAW BALES.

5. INLET PROTECTION IS TO REMAIN IN PLACE UNTIL THE UPSTREAM DISTURBED AREA IS PERMANENTLY STABILIZED. UNLESS THE LOCAL JURISDICTION APPROVES EARLIER REMOVAL OF INLET PROTECTION IN STREETS.

6. WHEN INLET PROTECTION AT AREA INLETS IS REMOVED, THE DISTURBED AREA SHALL BE COVERED WITH TOP SOIL, SEEDED AND MULCHED, OR OTHERWISE STABILIZED IN A MANNER APPROVED BY THE LOCAL JURISDICTION.

[DETAIL ADAPTED FROM TOWN OF PARKER, COLORADO AND CITY OF AURORA, COLORADO, NOT AVAILABLE IN AUTOCAD]

NOTE: MANY JURISDICTIONS HAVE BMP DETAILS THAT VARY FROM UDFCD STANDARD DETAILS. CONSULT WITH LOCAL JURISDICTIONS AS TO WHICH DETAIL SHOULD BE USED WHEN DIFFERENCES ARE NOTED.

NOTE: THE DETAILS INCLUDED WITH THIS FACT SHEET SHOW COMMONLY USED, CONVENTIONAL METHODS OF INLET PROTECTION IN THE DENVER METROPOLITAN AREA. THERE ARE MANY PROPRIETARY INLET PROTECTION METHODS ON THE MARKET. UDFCD NEITHER ENDORSES NOR DISCOURAGES USE OF PROPRIETARY INLET PROTECTION; HOWEVER, IN THE EVENT PROPRIETARY METHODS ARE USED, THE APPROPRIATE DETAIL FROM THE MANUFACTURER MUST BE INCLUDED IN THE SWMP AND THE BMP MUST BE INSTALLED AND MAINTAINED AS SHOWN IN THE MANUFACTURER'S DETAILS.

NOTE: SOME MUNICIPALITIES DISCOURAGE OR PROHIBIT THE USE OF STRAW BALES FOR INLET PROTECTION. CHECK WITH LOCAL JURISDICTION TO DETERMINE IF STRAW BALE INLET PROTECTION IS ACCEPTABLE.

1 C200 C300 EROSION CONTROL LOG

2 C200 C300 ROCK SOCK

3 C200 C300 INLET PROTECTION

COLORADO LICENSED PROFESSIONAL ENGINEER 05.12.20 53301

BASELINE

NO.	DATE	REVISION
3	6/12/20	PERMIT SUBMISSION
2	5/15/20	90% CD SUBMISSION
1	4/09/20	SCHEMATIC DESIGN

PEH ARCHITECTS
1720 14th Street Suite 100
Boulder, CO 80302
303-442-0408

GRAND STAIR
ENTRANCE TO LIVERY LOT

221 GREGORY ST
Black Hawk, CO 80422

SHEET TITLE
DETAILS I

PROJECT: CO3444
DATE: 03/31/20
DRAWN BY: JTP
CHECKED BY: SMB

SHEET NUMBER
C300

N:\CO3444 - GRAND STAIR CASE\DRAWINGS\CONSTRUCTION DOCUMENTS\3444-DESIGN.DWG - 6/12/20 - Jordan Plaskey

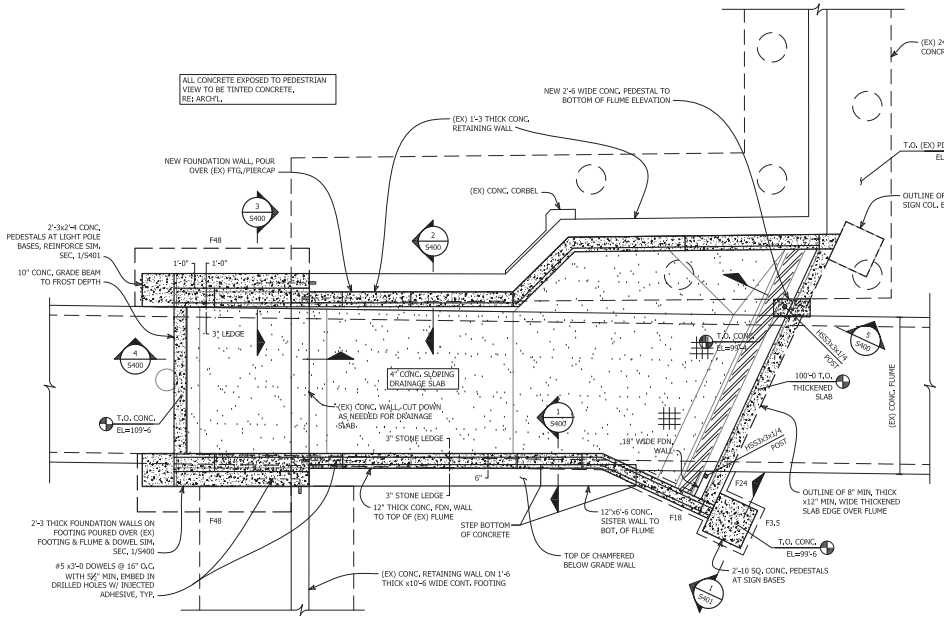

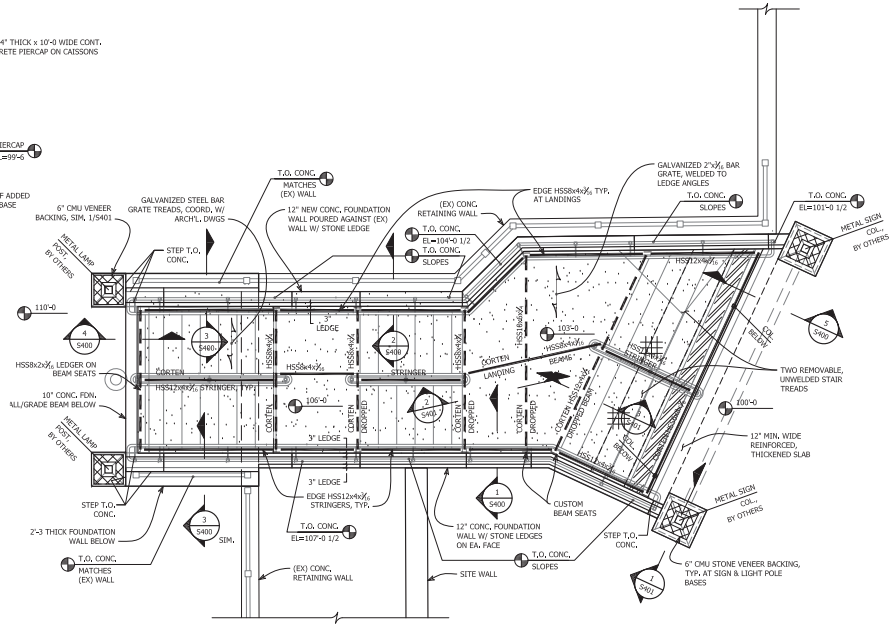

STAIR FOUNDATION PLAN

SCALE: 1/4"=1'-0"

PLAN NOTES

1. BOTTOM OF FOOTINGS SHALL BEAR ON UNDISTURBED NATURAL SOIL OR CONTROLLED STRUCTURAL FILL AT 48" FROST DEPTH UNLESS EXISTING (EX) FOUNDATION OR COMPETENT BEDROCK IS ENCOUNTERED ABOVE FROST DEPTH. IF ELEVATION OF BEDROCK IS ABOVE FROST DEPTH, PROVIDE #5 GROUTED DOWEL FROM FOUNDATION TO ROCK OR (EX) FOUNDATION @ 16" MAX. WITH 10" EMBEDMENT INTO ROCK. APPROXIMATE TOP OF FOOTING ELEVATION IS INDICATED THUS: (XX'-X). COORDINATE WITH OTHER GOVERNING CRITERIA, & STEP PER DETAIL 1/S200.
2. REFER TO GENERAL STRUCTURAL NOTES ON SHEET S400 FOR ADDITIONAL STRUCTURAL INFORMATION AND MATERIAL SPECIFICATIONS.
3. CONTRACTOR TO VERIFY ASSUMED EXISTING (EX) CONDITIONS PRIOR TO CONSTRUCTION. CONTACT DESIGN TEAM WITH DISCREPANCIES TO DEVELOP ALTERNATE STRUCTURAL SOLUTIONS.
4. ALL INTERFACING (EX) FOUNDATION FOUND TO BE DAMAGED SHALL BE REPAIRED.
5. COORDINATE DIMENSIONS WITH ARCHITECTURAL DRAWINGS AND EXISTING CONDITIONS.
6. CENTER FOOTINGS UNDER WALLS AND COLUMNS UNLESS NOTED OTHERWISE. REFER TO FOOTING SCHEDULE FOR SIZES & REINFORCING.
7. BASE OF STAIR ELEVATION OF 100'-0"=USGS EL. 8082'.
8. STEEL WITH EXTERIOR EXPOSURE OR WITHIN 6" OF SOIL SHALL BE GALVANIZED OR CORTEN.
9. "C.J." INDICATES LOCATIONS OF MINIMUM TOOLED, ¼" DEEP CONTROL JOINTS IN FLOOR SLAB ON GRADE. PROVIDE AT 13'-0" MAX. SPACING & AT RE-ENTRANT CORNERS.
10. TOP OF CONCRETE ELEVATION IS INDICATED THUS: T.O.C. EL=XX'-X. COORDINATE WITH ARCHITECTURAL AND CIVIL DRAWINGS & EXISTING CONDITIONS FOR ELEVATIONS NOT SHOWN.
11. REFER TO SECTION 4 ON SHEET S401 FOR SITE RETAINING WALL AND GUARDRAIL DETAIL.

STAIR FRAMING PLAN

SCALE: 1/4"=1'-0"

NORTH

FOOTING SCHEDULE		
SYMBOL	DIMENSIONS	REINFORCEMENT
F18	10" x 1'-6 CONT.	(2) #5 CONT.
F24	10" x 24" CONT.	(2) #5 CONT.
F48	16" x 48 CONT.	(4) #5 CONT. & #5 @ 16" TRANSVERSE, CENTERED
F2.0	10" x 2'-0 SQUARE	(2) #4 EA. WAY, BOTTOM
F3.5	10" x 3'-6 SQUARE	(4) #5 EA. WAY, BOTTOM

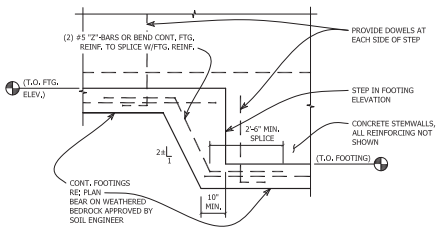

1 S200 STEP IN FOOTING DETAIL

NOT TO SCALE

MOZER-RENN
STRUCTURAL SERVICE
8573 E. NAPA PLACE
DENVER, CO 80237
303-870-5039
nmozer-renn@MRstructural.com

NO.	DATE	REVISION
3	06/12/2020	PERMIT SUBMISSION
2	05/15/2020	90% CD SUBMISSION
1	04/10/2020	DD SUBMISSION

PEH ARCHITECTS
1720 14th Street Suite 100
Boulder, CO 80302
303-442-0408

GRAND STAIR
ENTRANCE TO LIVERY LOT

GREGORY STREET
Black Hawk, CO 80422

SHEET TITLE
FOUNDATION & FRAMING PLAN

PROJECT:	1068P20
DATE:	06/12/20
DRAWN BY:	SRH
CHECKED BY:	NMR

SHEET NUMBER
S200

GENERAL STRUCTURAL NOTES

JOB #1058P20 - GREGORY STREET GRAND STAIR

DESIGN LIVE LOADS: 2015 IBC AND CITY OF BLACK HAWK DESIGN ORDINANCE
- RISK CATEGORY II — IMPORTANCE FACTOR=1.0
- SNOW — 55 PSF GROUND SNOW WITH ASCE 7 MODIFICATIONS
- WIND — 173 MPH ULTIMATE WIND SPEED, EXPOSURE C, ULTIMATE VELOCITY PRESSURE=50 PSF & NOMINAL PRESSURE=30 PSF, ENVELOPE ANALYSIS PROCEDURE, 50 PSF ULTIMATE COMPONENTS & CLADDING DESIGN PRESSURE
- SEISMIC — SEISMIC DESIGN CATEGORY B, SITE CLASSIFICATION C , S_{DS}=0.172, S_{D1}=0.073, R=4 FOR ORDINARY REINFORCED CONCRETE SHEARWALL AND R=1.25 FOR CANTILEVERED STEEL COLUMNS, C_s=0.043 AT STAIRS & 0.138 AT SIGN, 5770# STAIR & 900# SIGN ULTIMATE BASE SHEAR, EQUIVALENT LATERAL FORCE PROCEDURE
- LIVE — 100 PSF CORRIDOR/PUBLIC AREA

REQUIRED VERIFICATION & INSPECTIONS:
- PERIODIC INSPECTION IS REQUIRED OF ALL STRUCTURAL STEEL CONSTRUCTION, INCLUDING WELDED AND BOLTED CONNECTIONS, INSPECTION SHALL ALSO BE PERFORMED AT THE FABRICATION PREMISES OF LOAD-BEARING MEMBERS, UNLESS THE FABRICATOR IS REGISTERED TO PERFORM WORK WITHOUT SPECIAL INSPECTION.
- PERIODIC INSPECTION OF CONCRETE CONSTRUCTION, INCLUDING REINFORCING STEEL, FORMWORK, CURING TECHNIQUES, CAST-IN ANCHORS AND VERIFICATION OF MIX, SLUMP, AIR CONTENT AND TEMPERATURE TESTS SHALL BE PERFORMED WHEN STRENGTH SAMPLES ARE TAKEN FOR EACH POUR.
- VERIFICATION OF SOIL DESIGN CRITERIA SHALL BE PERFORMED BY THE GEOTECHNICAL ENGINEER.

FOUNDATION:
- FOUNDATION DESIGN IS IN ACCORDANCE WITH RECOMMENDATIONS CONTAINED IN SOILS INVESTIGATION REPORT NUMBER G14.1530.000 PREPARED BY GEOCAL, INC. DATED MAY 11, 2015 THAT MUST BE VERIFIED AS CURRENTLY APPROPRIATE PRIOR TO CONSTRUCTION.
- THE REPORT IS HEREBY REFERENCED AND EXCEPT WHERE OTHERWISE SPECIFICALLY NOTED HEREIN, ALL RECOMMENDATIONS AND PRECAUTIONS CONTAINED IN THAT REPORT SHALL BE ADHERED TO BY THE CONTRACTOR.
- NEW FOOTINGS SHALL BE PLACED ON NATURAL UNDISTURBED SOILS, CONTROLLED STRUCTURAL FILL OR ON COMPETENT BEDROCK, APPROVED BY THE SOIL ENGINEER,
- MAXIMUM DESIGN SOIL PRESSURE: 3000 PSF ALLOWABLE
- LATERAL SOIL PRESSURE (EQUIVALENT FLUID PRESSURE):
  - RESTRAINED FOUNDATION WALLS: 60 pcf AT-REST
  - CANTILEVERED RETAINING WALLS: 40 pcf ACTIVE
  - RESISTING: 360 pcf PASSIVE 0.4 COEFFICIENT OF FRICTION
- WHERE APPLICABLE, BACKFILL ALL RETAINING WALLS WITH FREE DRAINING GRANULAR MATERIAL EXCEPT THE TOP TWO FEET,
- SLOPE PERIMETER GRADE AWAY FROM BUILDING.

CONCRETE, REINFORCEMENT & MASONRY:
- CONCRETE SHALL CONFORM TO APPLICABLE PROVISIONS OF ACI 301 AND 318.
- MINIMUM 28 DAY COMPRESSIVE STRENGTH (F'C) AND DURABILITY REQUIREMENTS ARE AS FOLLOWS:
  - FOUNDATION WALLS & EXTERIOR SLABS W/ EXTERIOR EXPOSURE: 4500 PSI W/ 0.45 MAXIMUM WATER/CEMENT RATIO & 5.5% AIR ENTRAINMENT
  - BELOW-GRADE FOOTINGS 3500 PSI W/ 0.5 MAX. W/C RATIO & AIR ENTRAINMENT
- CEMENT TYPE II FOR RESISTANCE TO MODERATE TO SEVERE SULFATE EXPOSURE
- DEFORMED REINFORCEMENT: ASTM A615 GRADE 60
- REINFORCEMENT SHALL BE FABRICATED AND PLACED PER ACI MANUAL OF STANDARD PRACTICE (ACI_315). AT SPLICES, LAP BARS 50 DIAMETERS UNLESS NOTED OTHERWISE.
- MINIMUM 2 #5 AROUND ALL FOUR SIDES OF ALL OPENINGS, EXTEND MIN. 2'-6 HORIZONTALLY BEYOND OPENINGS. VERTICAL BARS SHALL BE FULL HEIGHT.
- CONCRETE COVER OVER REINFORCING: 1 1/2" FOR CONCRETE PLACED AGAINST FORMS; 3" FOR CONCRETE PLACED AGAINST EARTH.
- IN CONTINUOUS MEMBERS, SPLICE TOP BARS AT MID SPAN AND BOTTOM BARS OVER SUPPORTS.
- KEEP REINFORCEMENT CLEAN AND FREE OF DIRT, OIL, SCALE, OIL FORMS PRIOR TO PLACING REINFORCEMENT.
- PLACE CONCRETE CONTINUOUSLY WITHOUT HORIZONTAL COLD JOINTS UNLESS SPECIFICALLY NOTED OTHERWISE.

STRUCTURAL STEEL & FASTENERS:
- CORTEN TUBE BEAMS — ASTM A588, 50 KSI YIELD STRENGTH
- GALVANIZED TUBE COLUMNS/BEAMS: — ASTM A500, GRADE B, 46 KSI
- ANGLES, PLATES, MISC.: — ASTM A36
- GALVANIZING SHALL CONFORM TO ASTM A924 WITH A MINIMUM COATING OF G30.
- ANCHOR BOLTS: — ASTM A307 OR A36
- CONNECTOR BOLTS: — ASTM A325
- ADHESIVE ANCHORS SHALL BE NER APPROVED, INSTALLED IN ACCORDANCE WITH MANUFACTURERS SPECIFICATIONS.
  - O IN CONCRETE: WEDGE TYPE
  - O IN SOLID MASONRY: SLEEVE TYPE
- NON-SHRINK GROUT BENEATH COLUMN BASE AND BEAM BEARING PLATES SHALL BE NON-METALLIC WITH MINIMUM COMPRESSIVE STRENGTH 5000 PSI.
- WELDING SHALL BE BY QUALIFIED WELDERS, E70XX ELECTRODES.
- ALL STRUCTURAL STEEL SHALL BE FABRICATED AND ERECTED PER THE CURRENT EDITION OF AISC STEEL CONSTRUCTION MANUAL.

LOOSE LINTELS:
- MINIMUM LINTEL EXCEPT AS NOTED, ONE ANGLE FOR EACH 4" OF WALL THICKNESS TO BEAR 6" EACH END:
  - O OPENINGS TO 4'-0 — L 3-1/2 X 3-1/2 X 1/4
  - O 4'-0 TO 5'-4 — L 5 X 3-1/2 X 1/4
  - O 5'-5 TO 6'-6 — L 6 X 3-1/2 X 5/16

GENERAL REQUIREMENTS
- THE STRUCTURAL DRAWINGS ILLUSTRATE THE COMPLETED STRUCTURE WITH ALL ELEMENTS IN THEIR FINAL POSITIONS, PROPERLY SUPPORTED AND BRACED. THE CONTRACTOR, IN THE PROPER SEQUENCE, SHALL PROVIDE PROPER SHORING AND BRACING AS MAY BE REQUIRED TO ACHIEVE THE FINAL COMPLETED STRUCTURE. BRACING AND SHORING DESIGN, IF REQUIRED, SHALL BE BY A COLORADO REGISTERED ENGINEER FOR THE CONTRACTOR.
- DUTY OF COOPERATION: RELEASE OF THESE CONTRACT DOCUMENTS ASSUMES FURTHER COOPERATION AMONG THE OWNER, CONTRACTOR AND DESIGN TEAM. ALTHOUGH THE ENGINEER HAS PERFORMED DESIGN SERVICES WITH DUE CARE AND DILIGENCE, PERFECTION CANNOT BE GUARANTEED, COMMUNICATION IS IMPERFECT AND EVERY CONTINGENCY CANNOT BE ANTICIPATED. THE ENGINEER DOES NOT WARRANT THAT THE DRAWINGS ARE PERFECT OR FREE OF DEFECTS. ANY AMBIGUITY OR DISCREPANCY DISCOVERED BY THE USE OF THESE PLANS SHALL BE REPORTED IMMEDIATELY TO THE DESIGN TEAM SO THAT A SOLUTION CAN BE DEVELOPED, A FAILURE TO COOPERATE THROUGH NOTIFICATION RELIEVES THE DESIGN TEAM FROM RESPONSIBILITY AND ALL CONSEQUENCES.
- OBSERVATIONS OF FOUNDATION REINFORCING OR FRAMING REQUIRED BY THE OWNER, LENDER, INSURER, BUILDING DEPARTMENT OR ANY OTHER PARTY WILL BE ACCOMPLISHED BY THE ENGINEER AT THE OWNER'S EXPENSE. AT LEAST 48 HOURS ADVANCE NOTICE IS REQUESTED.
- ALL SLABS ON GRADE SHALL BE SEPARATED FROM ADJACENT STRUCTURAL AND FINISH ELEMENTS TO ALLOW FREE MOVEMENT OF THE SLAB, UNLESS SPECIFICALLY SHOWN AND NOTED OTHERWISE.
- THE CONTRACTOR SHALL INSPECT EXISTING CONDITIONS TO VERIFY ASPECTS OF THE WORK SHOWN ON THE DRAWINGS, VARIATIONS OR DISCREPANCIES SHALL BE REPORTED TO THE DESIGN TEAM PRIOR TO PROCEEDING WITH THE WORK TO ALLOW REMEDIES TO BE DEVELOPED. MOZER-RENN STRUCTURAL SERVICE SHALL NOT BE HELD LIABLE FOR MATERIALS, LABOR OR RE-DESIGN COSTS ASSOCIATED WITH EXISTING CONDITIONS WHICH DIFFER FROM THOSE INDICATED ON THE DRAWING.
- THESE PLANS HAVE BEEN ENGINEERED FOR CONSTRUCTION AT ONE SPECIFIC BUILDING SITE. BUILDER ASSUMES ALL RESPONSIBILITY FOR USE OF THESE PLANS AT ANY OTHER BUILDING SITE. PLANS SHALL NOT BE USED FOR CONSTRUCTIONS AT ANY OTHER BUILDING SITE WITHOUT SPECIFIC REVIEW BY THE ENGINEER.
- THE FOUNDATION DESIGN SHOWN ASSUMES THAT THE OWNER/BUILDER IS AWARE OF THE RISK OF SLAB ON GRADE MOVEMENT AND HAS READ THE PREVIOUSLY REFERENCED SOILS REPORT. USE OF THESE PLANS IS INDICATION THAT THE OWNER/BUILDER ACCEPTS THE RISK OF SLAB ON GRADE CONSTRUCTION IN FINISHED AREAS. MOZER-RENN STRUCTURAL SERVICE WILL NOT BE HELD LIABLE FOR DAMAGES CAUSED BY SLAB MOVEMENT.
- THE FABRICATOR AND/OR SUPPLIER OF STRUCTURAL STEEL, AND STAIR SYSTEMS SHALL SUBMIT SHOP DRAWINGS, AND THE CONCRETE SUPPLIER SHALL SUBMIT MIX DESIGNS FOR ARCHITECT AND ENGINEER REVIEW. ALLOW TEN WORKING DAYS FOR REVIEW.

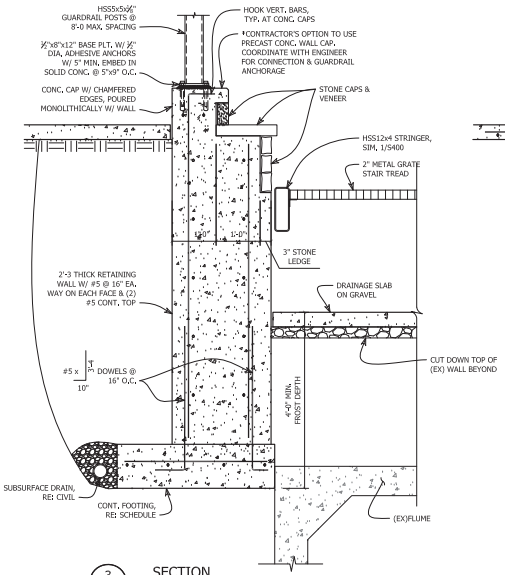

3 S400 SECTION
3/4"=1'-0"

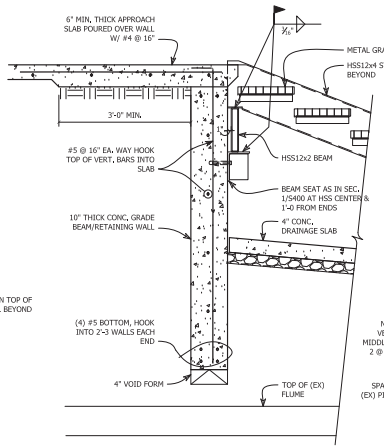

4 S400 SECTION
3/4"=1'-0"

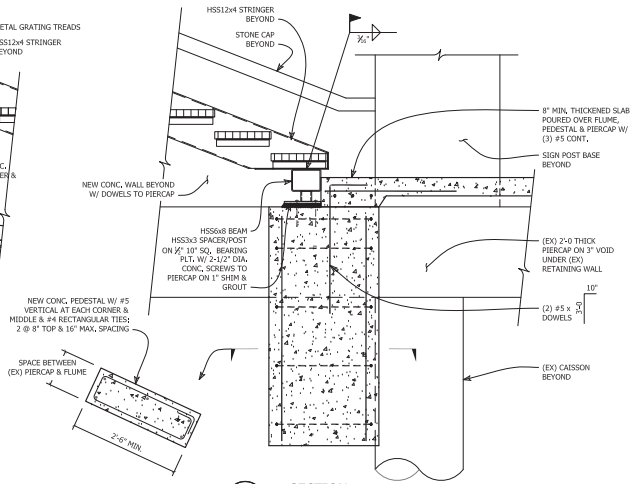

5 S400 SECTION
3/4"=1'-0"

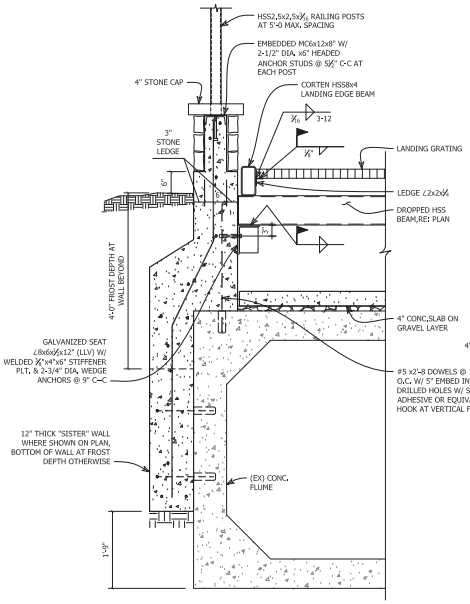

1 S400 SECTION
3/4"=1'-0"

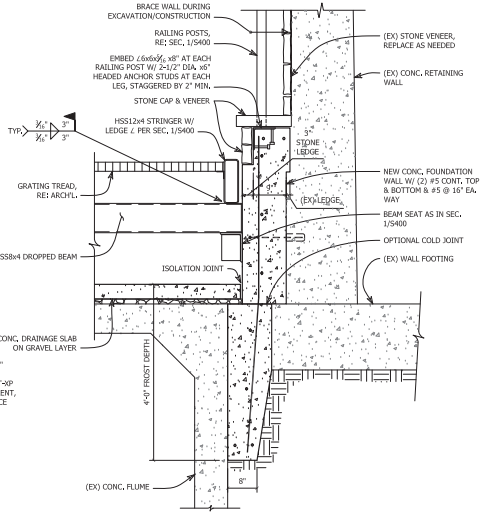

2 S400 SECTION
3/4"=1'-0"

MOZER-RENN
STRUCTURAL SERVICE
8573 E. NAPA PLACE
DENVER, CO 80237
303-870-5039
mmozer-renn@MRstructural.com

NO.	DATE	REVISION
3	06/12/2020	PERMIT SUBMISSION
2	05/15/2020	90% CD SUBMISSION
1	04/10/2020	DD SUBMISSION

PEH ARCHITECTS
1720 14th Street Suite 100
Boulder, CO 80302
303-442-0408

GRAND STAIR ENTRANCE TO LIVERY LOT

GREGORY STREET
Black Hawk, CO 80422

SHEET TITLE
GENERAL NOTES & SECTIONS

PROJECT:	1058P20
DATE:	06/12/20
DRAWN BY:	SRH
CHECKED BY:	NMR

SHEET NUMBER
S400

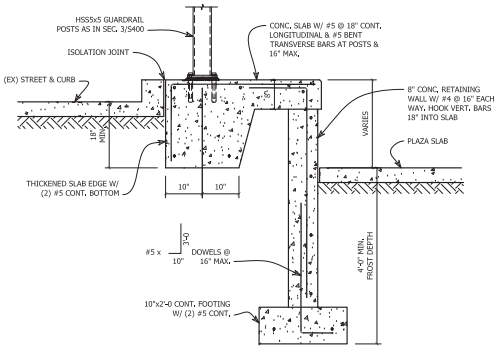

4 S401 SECTION
3/4"=1'-0"

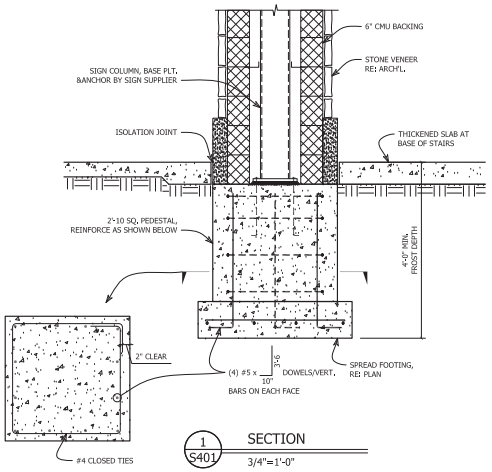

1 S401 SECTION
3/4"=1'-0"

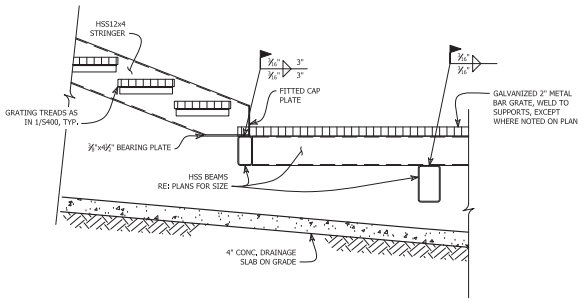

2 S401 SECTION
3/4"=1'-0"

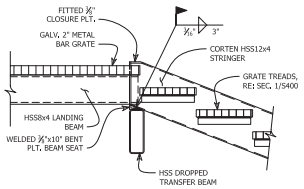

3 S401 SECTION
3/4"=1'-0"

MOZER-RENN
STRUCTURAL SERVICE
8573 E. NAPA PLACE
DENVER, CO 80237
303-870-5039
nmozer-renn@MRstructural.com

NO.	DATE	REVISION
3	06/12/2020	PERMIT SUBMISSION
2	05/15/2020	90% CD SUBMISSION
1	04/10/2020	DD SUBMISSION

PEH ARCHITECTS
1720 14th Street Suite 100
Boulder, CO 80302
303-442-0408

GRAND STAIR ENTRANCE TO LIVERY LOT

GREGORY STREET
Black Hawk, CO 80422

SHEET TITLE
SECTIONS

PROJECT:	1068P20
DATE:	06/12/20
DRAWN BY:	SRH
CHECKED BY:	NMR

SHEET NUMBER
S401

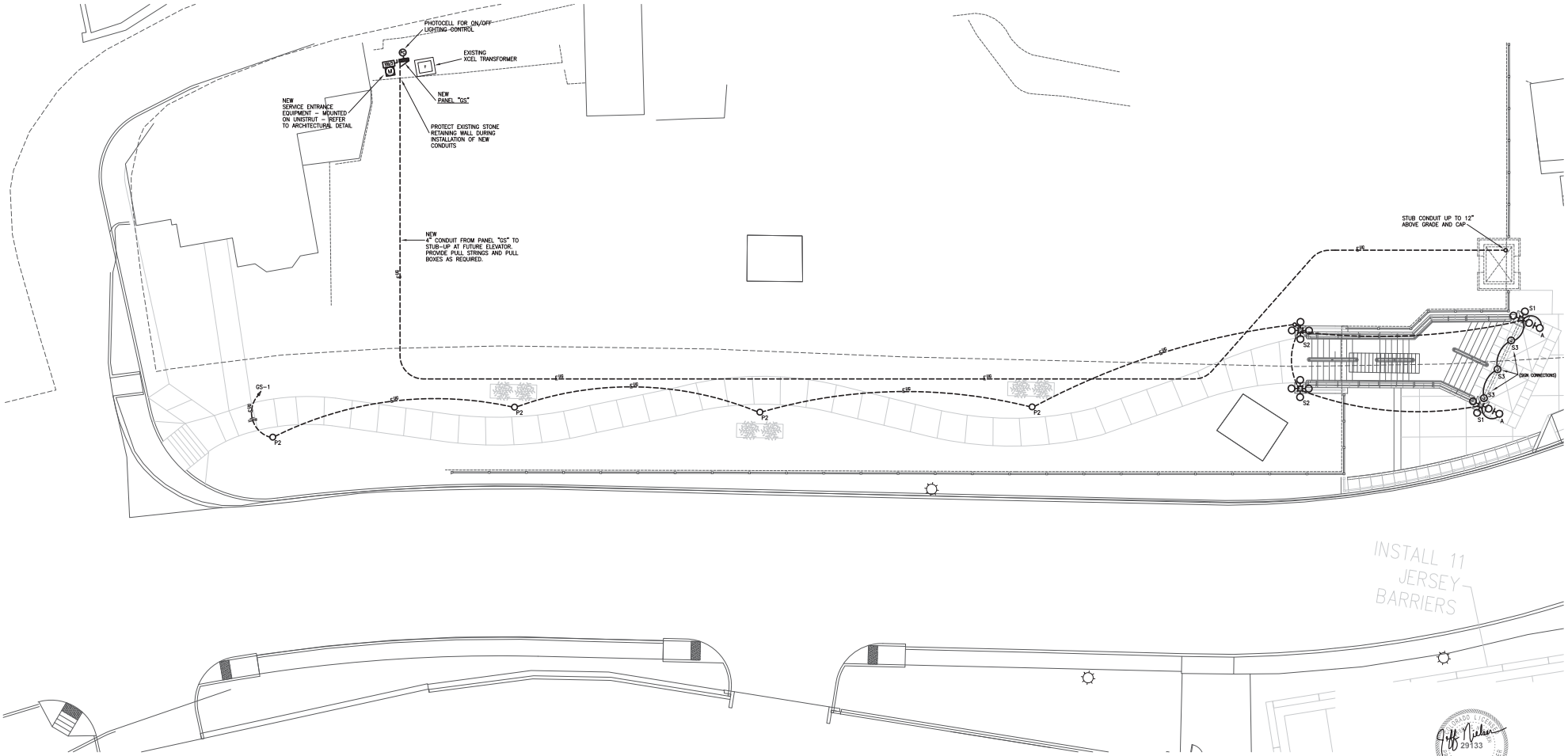

SITE PLAN PLAN - ELECTRICAL
SCALE: 1" = 10'-0"

Jeff Nielsen 29133
6-12-20

NO.	DATE	REVISION
3	06/12/2020	PERMIT SUBMISSION
2	05/15/2020	90% CONSTRUCTION DOCUMENTS
1	04/10/2020	DD SUBMISSION

PEH ARCHITECTS
1720 14th Street, Suite 100
Boulder, CO 80302
303-442-0408

GRAND STAIR
ENTRANCE TO LIVERY LOT

GREGORY STREET
Black Hawk, CO 80422

SHEET TITLE
ELECTRICAL
SITE LIGHTING PLAN

JCN Engineering, Inc.
3281 Routt St., Wheat Ridge, CO 80033
(303) 239-0736
jcneng@comcast.net

PROJECT: 202022
DATE: 11/04/19
DRAWN BY: DK
CHECKED BY: JCN

SHEET NUMBER
E200

ELECTRICAL LEGEND

SYMBOL	DESCRIPTION
LIGHTING	
	3-WAY WALL SWITCH, +48" ABOVE FLOOR UNLESS NOTED OTHERWISE.
	SLIDE-TO-OFF DIMMER SWITCH, +48" UNLESS NOTED OTHERWISE.
	OCCUPANCY SENSOR WALL SWITCH, WATT-STOPPER DSW-301 OR EQUAL.
	MULTIPLE GANG SWITCH BANK, +48" ABOVE FLOOR UNLESS NOTED OTHERWISE.
	OCCUPANCY SENSOR UNIT, CEILING MOUNTED.
	OCCUPANCY SENSOR UNIT, WALL MOUNTED.
	FLUORESCENT STRIP LIGHT, LENGTH AND MOUNTING PER FIXTURE SCHEDULE.
	SURFACE OR PENDANT FLUORESCENT FIXTURE, LENGTH/MOUNTING PER FIXTURE SCHEDULE.
	RECESSED GRID MOUNTED FLUORESCENT FIXTURE. SIZE PER FIXTURE SCHEDULE.
	RECESSED DOWNLIGHT FIXTURE, TYPE AND SIZE PER FIXTURE SCHEDULE.
	SURFACE OR PENDANT MOUNTED FIXTURE, TYPE AND SIZE PER FIXTURE SCHEDULE.
	SINGLE FACE EXIT SIGN, WITH ARROW AS SHOWN TYPE AND COLOR PER FIXTURE SCHEDULE.
	DOUBLE FACE EXIT SIGN, WITH ARROW AS SHOWN TYPE AND COLOR PER FIXTURE SCHEDULE.
	WALL MOUNTED BATTERY PACK EGRESS LIGHT, TYPE AND COLOR PER FIXTURE SCHEDULE.
POWER / TELECOMM.	
	DUPLEX RECEPTACLE, +15" UNLESS NOTED OTHERWISE.
	DOUBLE-DUPLEX RECEPTACLE, +15" UNLESS NOTED OTHERWISE.
	HALF SWITCHED DUPLEX RECEPTACLE, +15" UNLESS NOTED OTHERWISE.
	CEILING MOUNTED DUPLEX RECEPTACLE.
	FLUSH FLOOR MOUNTED DUPLEX RECEPTACLE
	FLUSH FLOOR MOUNTED DUPLEX/TELE/DATA RECEPTACLE.
	TELE/POWER POLE
	JUNCTION BOX, WALL MOUNTED AT +15" UNLESS NOTED OTHERWISE.
	JUNCTION BOX ABOVE CEILING.
	VOICE/DATA JACK, +15" ABOVE FLOOR IN A 2-GANG BOX WITH A SINGLE GANG MUD RING AND 1" CONDUIT TO ACCESSIBLE CEILING SPACE.
	CABLE OR SATELLITE OUTLET RECEPTACLE, +15" UNLESS NOTED OTHERWISE.
	BRANCH CIRCUIT PANELBOARD, +66" TO TOP OF PANEL.
FIRE ALARM / SECURITY	
	CARD READER, 2-GANG BOX WITH EMPTY 1/2"C. TO CEILING SPACE.
	DUCT DETECTOR KEYED TEST/RESET SWITCH.
	PHOTOELECTRIC SMOKE DETECTOR.
	THERMAL RATE-OF-RISE DETECTOR.
	MANUAL PULL STATION.
	FIRE ALARM STROBE, +80" ABOVE FLOOR OR 6" BELOW CEILING, WHICHEVER IS LOWER.
	FIRE ALARM STROBE, CEILING MOUNTED.
	FIRE ALARM HORN/STROBE, +80" A.F.F. OR 6" BELOW CEILING, WHICHEVER IS LOWER.
	FIRE ALARM HORN/STROBE, CEILING MOUNTED.
CIRCUITING / TAGS	
	FLEX CONDUIT CONNECTION.
	CONDUIT, CONCEALED IN WALLS OR CEILING.
	CONDUIT, CONCEALED IN FLOOR.
E UG	CONDUIT, UNDERGROUND BURIED.
A-1,3,5	BRANCH CIRCUIT HOMERUN TO PANELBOARD, ARROWS INDICATES NUMBER OF CIRCUITS.
	NEUTRAL, HOT, SWITCH LEG & GROUND CONDUCTORS AND CONTROL PAIR; RESPECTIVELY
1	ELECTRICAL DETAIL NOTE REFERENCE.
EF-1	MECHANICAL EQUIPMENT REFERENCE.
AC	ABOVE COUNTER
CLG	CEILING MOUNTED
EX	EXISTING TO REMAIN
GFI	GROUND FAULT INTERRUPTER
R	EXISTING TO BE REMOVED
REL	RELOCATED - PROVIDE ADDITIONAL CONDUIT AND WIRE AS REQUIRED.
S	SURFACE MOUNTED
U.N.O.	UNLESS NOTED OTHERWISE

NOTE:
- WIRE DEVICES AND BOXES SHALL BE FLUSH MOUNTED UNLESS NOTED OTHERWISE.
- HEAVY LINE WEIGHT INDICATES NEW WORK.
- LIGHT LINE WEIGHT INDICATES EXISTING TO REMAIN.
- LIGHT DASHED LINE WEIGHT INDICATES EXISTING TO BE REMOVED. ALL EXISTING DEVICES TO REMAIN SHALL BE RECONNECTED AS REQUIRED AFTER DEMOLITION IS COMPLETE. PROVIDE NEW CONDUIT AND WIRE AS REQUIRED.

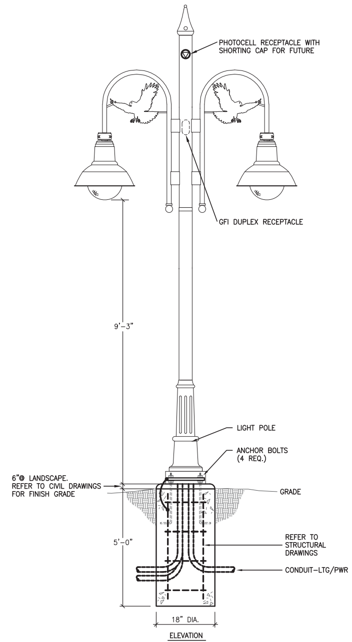

FIXTURE TYPE "P2" POLE BASE DETAIL

SCALE: NONE

FIXTURE SCHEDULE - GRAND STAIR

KEY	LAMP(S)	DESCRIPTION	FINISH	VOLT	MOUNTING	MFR	CAT. NO.
A	32W LED 3000K	12" x 4" STEP LIGHT FOR PLAQUE LIGHTING	STAINLESS STEEL	120	WALL - REFER TO DETAIL 4 ON DRAWING A400	FC LIGHTING	FCSL207-UNV-3K-CR185-4L-SS-LD-99003-ETL
P2	32W LED 3000K	LED DECORATIVE PEDESTRIAN POLE LIGHT WITH DUPLEX GFI RECEPT AT POLE TOP	BLACK	120	GRADE	MOUNTAIN STATES LIGHTING	MSL BLACKHAWK 92RA-SBW20ANP16WLED POLE
S1	LED	3-HEAD CUSTOM LED LANTERN	BLACK	120	POLE	SIGN VENDOR	-
S2	LED	4-HEAD CUSTOM LED LANTERN	-	120	POLE	SIGN VENDOR	-
S3	LED	CUSTOM SIGN CABINETS	-	120	SUFACE	SIGN VENDOR	-

FAULT CURRENT CALCULATIONS

FAULT CURRENT AMPS AVAILABLE AT NEW
75 KVA TRANSFORMER (120/208V-3P-4W) = **13,000 AMPS**

FAULT #1 (LOCATION: GRAND STAIR PANEL "GS")

$$f = \frac{1.73 \times 100 \times 13{,}000}{1 \times 5{,}096 \times 208} = \mathbf{2.122}$$

$$M = \frac{1}{1 + 2.122} = \mathbf{0.320}$$

FAULT AVAILABLE = 13,000 x 0.320 = **4,160 AMPS** (1)

NOTES:
1. All Calculations use Bussman "Point-To-Point" Method.
2. The E.C. shall report any discrepancies to the Engineer.
3. Conductor lengths shall not be less than the values listed. The E.C. shall field verify conductor lengths and contact the engineer immediately if the lengths are less than the value shown.
4. Conductor lengths listed in this table are for fault study purposes only and shall not be used for bidding or other calculations.
5. All in-line Utility Meters shall be protected to limit the Fault Current to no more than 10kA at the meter per the Utility Company requirements.
6. Label and date available fault current value at the main service disconnect per NEC 110.24(A).
7. Provide Arc-Flash Hazard study and labeling for personnel and protective equipment prior to energizing equipment per NEC 110.16 and NFPA 70E.

(NEW - GRAND STAIR)
PANEL "GS"

MOUNTING: ☐ FLUSH ☑ SURFACE
NEMA RATING: ☐ 1 ☑ 3R
SERVICE ENTRANCE RATED: ☑
ISOLATED GROUND BUS: ☐

LOCATION:

VOLTAGE: **120/208V-3PH-4W**
A.I.C. RATING: **10,000**
MAIN C.B.: **100 AMP**
BUS SIZE: **125 AMP**

BRANCH BREAKERS

NOTES	CD	DESCRIPTION	SIZE	P	CIR.	LEFT PHASE LOAD A	LEFT B	LEFT C	RIGHT PHASE LOAD A	RIGHT B	RIGHT C	CIR.	SIZE	P	DESCRIPTION	CD	NOTES
	L	LIGHTS-STAIR/SIDEWALK/SIGN	20	1	1	-			-			2	20	1	SPARE		
		SPARE	20	1	3		-			-		4	20	1	SPARE		
		SPARE	20	1	5			-			-	6	20	1	SPARE		
		SPARE	20	1	7	-			-			8	20	1	SPARE		
		SPARE	20	1	9		-			-		10	20	1	SPARE		
		SPARE	20	1	11			-			-	12	20	1	SPARE		
		SPARE	20	1	13	-			-			14	30		-----		
		SPARE	20	1	15		-			-		16			TVSS		
		SPARE	20	1	17			-			-	18		3	-----		
						0	0	0	0	0	0						
						0	0	0	Total Connected V.A.								
							0	=Total Connected VA all Phases									

CD	LOAD	CONNECTED	D.F.	KVA	AMPS
L	LIGHTING	0 VA	1.25	0.0	
R	RECEPTACLES (1ST 10000)	0 VA	1.00	0.0	
R	RECEPTACLES (REMAINING)	0 VA	0.50	0.0	
ML	MOTOR (LARGEST)	0 VA	1.25	0.0	
MR	MOTORS (REMAINING)	0 VA	1.00	0.0	
H	ELECTRIC HEAT	0 VA	1.25	0.0	
M	ELECTRICAL MISC.	0 VA	1.00	0.0	
	TOTAL ESTIMATED LOAD	**0 VA**		**0.0**	**0.0**

NOTES
1
2
3

ALL SINGLE PHASE SHARED NEUTRAL CIRCUITS SHALL BE SUPPLIED WITH BREAKER HANDLE TIES PER NEC 210.4

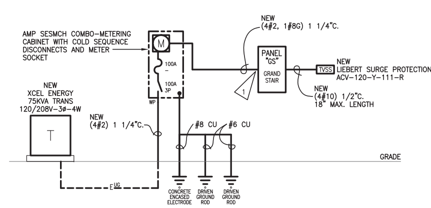

GRAND STAIR ELECTRICAL ONE-LINE DIAGRAM

SCALE: NONE

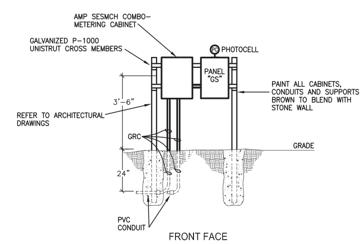

ELECTRICAL EQUIPMENT MOUNTING DETAIL

SCALE: NONE

ELECTRICAL SPECIFICATIONS

1. PROVIDE ALL EQUIPMENT AND SERVICES NECESSARY TO INSTALL THE COMPLETE SYSTEMS DESCRIBED BY THE CONTRACT DOCUMENTS AND SPECIFIED BELOW. THE DRAWINGS ILLUSTRATE THE GENERAL DESIGN AND EXTENT OF THE PERFORMANCE REQUIRED. ALL DIMENSIONS AND LOCATIONS SHALL BE TAKEN FROM THE ARCHITECTURAL DRAWINGS.
2. COMPLY WITH ALL STATE AND LOCAL CODES, UTILITY COMPANY REGULATIONS, FIRE DEPARTMENT REQUIREMENTS AND THE LATEST EDITIONS OF THE NFPA CODES.
3. EQUIPMENT AND MATERIALS SHALL BE NEW, UL-LISTED FOR THE USE INTENDED, BE FREE FROM DAMAGE OR DEFECT AND SHALL BE INSTALLED PER THE MANUFACTURERS INSTRUCTIONS.
4. THE CONTRACTOR SHALL BE RESPONSIBLE FOR THE SUCCESSFUL OPERATION OF THE ELECTRICAL SYSTEMS FOR A PERIOD OF ONE YEAR FROM THE DATE OF FINAL ACCEPTANCE. PROVIDE OPERATING AND MAINTENANCE INSTRUCTIONS FOR ALL ELECTRICAL SYSTEMS.
5. SUPPORT CONDUIT AND EQUIPMENT FROM THE STRUCTURE TO PREVENT SAGGING, POCKETING, SWAYING AND VIBRATIONS.
6. PROVIDE SLEEVES AND INSERTS FOR ALL ELECTRICAL CONDUIT, SEAL ALL CONDUIT PENETRATIONS PASSING THROUGH FIRE RATED BARRIERS AND EXTERIOR WALLS WITH AN APPROVED MATERIAL TO MAINTAIN THE FIRE RATED INTEGRITY.
7. PROVIDE COMPLETE SYSTEMS OF CONDUCTORS AND RACEWAYS USING CONDUIT AND/OR CABLE ASSEMBLIES APPROPRIATE TO THE FUNCTION AND LOCATION AND SPECIFICALLY APPROVED BY THE NEC. CONDUCTORS MUST BE DERATED PER THE NEC. LOAD BALANCE THE ENTIRE SYSTEM TO WITHIN 15% PER PHASE. PROVIDE A COMPLETE GROUNDING SYSTEM IN ACCORDANCE WITH ARTICLE 250 OF THE NEC.
8. THE FOLLOWING RACEWAYS ARE APPROVED FOR USE ON THIS PROJECT, WHERE APPROVED BY THE NEC:
   EMT: ELECTRICAL METALLIC TUBING, GALVANIZED
   PVC: POLYVINYL CHLORIDE CONDUIT, SCHEDULE 40, TRANSITION TO GRC BEFORE RISING ABOVE GRADE.
   GRC: GALVANIZED RIGID CONDUIT
9. THE FOLLOWING CABLE ASSEMBLIES MAY BE USED IN THE POWER DISTRIBUTION SYSTEM, WHERE APPROVED BY THE NEC: MC (METAL CLAD) CABLE.
10. PROVIDE GALVANIZED STEEL OUTLET AND JUNCTION BOXES, EXCEPT WHERE OTHERWISE INDICATED. BOXES SHALL BE A MINIMUM OF 4" SQUARE OR OCTAGONAL WITH DEPTH AS REQUIRED. PROVIDE WEATHERPROOF TYPE CAST BOXES WITH GASKET AND CAST COVERPLATES FOR ALL WET LOCATIONS. THROUGH THE WALL BOXES ARE NOT PERMITTED. PROVIDE PLASTER OR TILE RINGS FOR ALL FLUSH OUTLETS INSTALLED WHERE REQUIRED.
11. ALL CONDUCTORS SHALL BE COPPER, RATED AT 600 VOLTS (STRANDED FOR NO. 8 AWG AND LARGER), WITH THE FOLLOWING INSULATION RATINGS: THHN, THWN, XHHW. THE CONDUCTORS SHALL BE APPLIED USING THE 75C RATING TABLE.
12. PROVIDE SPECIFICATION GRADE, WHITE, DEVICES THROUGHOUT AS MANUFACTURED BY HUBBELL, ARROW HART OR LEVITON. PLATES SHALL BE WHITE NYLON WITH MATCHING SCREWS. PROVIDE BLANK COVERPLATE FOR UNUSED BOXES. COVERPLATES FOR MULTI-GANG APPLICATIONS SHALL BE SINGLE PIECE AND SIZED FOR THE BOX IT COVERS.
13. BRANCH CIRCUITS SHALL USE MINIMUM NO. 12 AWG WIRING FOR BRANCH CIRCUITS, PROTECTED BY 20 AMP CIRCUIT BREAKERS. CONTROL WIRING MAY BE NO. 14 AWG MINIMUM.
14. DO NOT INSTALL EXPOSED CONDUIT IN AREAS OPEN TO THE PUBLIC. EXPOSED RACEWAYS MUST BE WIREMOLD WHERE REQUIRED AND ONLY WHERE APPROVED BY THE ARCHITECT. RUN EXPOSED RACEWAYS PARALLEL TO AND AT RIGHT ANGLES WITH THE BUILDING LINES.
15. USE FLEXIBLE METALLIC CONDUIT FOR CONNECTIONS TO MOTORS, FIXTURES AND OTHER EQUIPMENT WHERE VIBRATION IS ENCOUNTERED. PROVIDE SEALTITE FLEXIBLE METALLIC CONDUIT IN WET AREAS.
16. PROVIDE A GROUND WIRE IN NON-METALLIC CONDUIT AND FLEXIBLE CONDUIT.
17. PROVIDE CIRCUIT BREAKER TYPE LOADCENTERS AS SCHEDULED ON THE DRAWINGS. BREAKERS SHALL BE FULL WIDTH, THERMALMAGNETIC, PLUG-IN TYPE. PROVIDE MULTI-POLE BREAKERS WITH COMMON TRIP AND SINGLE OPERATING HANDLE. PROVIDE SEPARATE GROUND BUS. PROVIDE A TYPED DIRECTORY IN A DIRECTORY FRAME. INSTALL TRIMS AND DOORS WITH THE PRIMER COATS IN FINISHED AREAS. PROVIDE ONE SPARE ¾" CONDUIT UP OR DOWN TO AN ACCESSILBE LOCATION FOR EACH 3 UNUSED POLES IN THE LOADCENTER. LOADCENTERS SHALL BE SQUARE D OR EQUAL.
18. PROVIDE NORMAL DUTY, ENCLOSED, FUSIBLE AND NON-FUSIBLE SAFETY SWITCHES IN ENCLOSURES RATED FOR THEIR USE. PROVIDE A LABEL ON ALL SWITCHES.
19. PROVIDE BRANCH CIRCUITS, FEEDERS, JUNCTION BOXES, DISCONNECT SWITCHES, ETC. AS REQUIRED FOR A COMPLETE SYSTEM. MAKE POWER CONNECTIONS TO MOTORS AND CONTROLS FOR HEATING, VENTILATION, AIR CONDITIONING, PLUMBING AND OWNER FURNISHED EQUIPMENT AS REQURIED.
20. EXTERIOR LIGHTING FIXTURES, RACEWAYS, BALLASTS, EQUIPMENT, ETC. SHALL BE WEATHERPROOF AND SUITABLE FOR TEMPERATURES DOWN TO -20F.

COLORADO LICENSED PROFESSIONAL ENGINEER 29133
6-12-20

JCN Engineering, Inc.
3281 Routt St., Wheat Ridge, CO 80033
(303) 239-0736
jcneng@comcast.net

NO.	DATE	REVISION
3	06/12/2020	PERMIT SUBMISSION
2	05/15/2020	90% CONSTRUCTION DOCUMENTS
1	04/10/2020	DD SUBMISSION

PEH ARCHITECTS
1720 14th Street, Suite 100
Boulder, CO 80302
303-442-0408

GRAND STAIR
ENTRANCE TO LIVERY LOT

GREGORY STREET
Black Hawk, CO 80422

SHEET TITLE
ELECTRICAL LEGEND, SCHEDULES & ONE-LINE DIA.

PROJECT: 202022
DATE: 11/04/19
DRAWN BY: DK
CHECKED BY: JCN

SHEET NUMBER
E201

RESOLUTION 3-2021

A RESOLUTION ESTABLISHING A DESIGNATED PUBLIC PLACE FOR THE POSTING OF MEETING NOTICES PURSUANT TO C.R.S. § 24-6-402(2)(c)

STATE OF COLORADO
COUNTY OF GILPIN
CITY OF BLACK HAWK

Resolution No. 3-2021

TITLE: A RESOLUTION ESTABLISHING A DESIGNATED PUBLIC PLACE FOR THE POSTING OF MEETING NOTICES PURSUANT TO C.R.S. § 24-6-402(2)(c)

WHEREAS, C.R.S. § 24-6-402(2)(c) requires the City to annually designate the public place for posting notices to comply with the Colorado Open Meetings Law, C.R.S. § 24-6-401, *et seq.* (the "Open Meetings Law");

WHEREAS, consistent with House Bill 19-1087, the City hereby desires to post notice of the City's public meetings not only in physical locations, but also on the City's website as the City's official online presence to the greatest extent practicable; and

WHEREAS, the notice must have specific agenda information, posted no less than twenty-four (24) hours prior to the meeting, must be accessible at no charge to the public, must be searchable by type of meeting, date of meeting, time of meeting and agenda contents, shall link to any social media accounts of the local public body, shall provide the address of the website to the Department of Local Affairs, and shall designate a public place within the boundaries of the local public body at which it may post a notice no less than twenty-hours (24) hours prior to a meeting if it is unable to post a notice online in exigent or emergency circumstances such as a power outage or interruption in internet service that prevents the public from accessing the notice online.

NOW, THEREFORE, BE IT RESOLVED BY THE CITY COUNCIL OF THE CITY OF BLACK HAWK, COLORADO, THAT:

Section 1. **Designation.** The City Council of the City of Black Hawk, in compliance with C.R.S. § 24-6-402(2)(c) of the Open Meetings Law, hereby designates the City website at www.cityofblackhawk.org as the official place for posting notices. The City may additionally post notices at City Hall, located at 201 Selak Street, and any City social media accounts. If there is a known outage or an emergency meeting, the City may post a physical notice at the public entrance of the City Hall of Black Hawk, located at 201 Selak Street.

RESOLVED AND PASSED this 13th day of January, 2021.

_____
David D. Spellman, Mayor

ATTEST:

_____
Melissa A. Greiner, CMC, City Clerk

CITY OF BLACK HAWK
REQUEST FOR COUNCIL ACTION

SUBJECT: Resolution establishing a designated public place for the posting of Meeting Notices as required by the Colorado Open Meeting Law

RECOMMENDATION: Staff recommends the following motion to the Mayor and Board of Aldermen:

MOTION TO APPROVE Resolution 3-2021 Establishing a Designated Public Place for the Posting of Meeting Notices Pursuant to C.R.S. § 24-6-402(2)(c)

SUMMARY AND BACKGROUND OF SUBJECT MATTER:

The City Council of the City of Black Hawk, in compliance with C.R.S. § 24-6-402(2)(c) of the Open Meetings Law, hereby designates the City website at www.cityofblackhawk.org as the official place for posting notices. The City may additionally post notices at City Hall, located at 201 Selak Street, and any City social media accounts. If there is a known power outage or an emergency meeting, the City may post a physical notice at the public entrance of the City Hall of Black Hawk, located at 201 Selak Street.

AGENDA DATE: January 13, 2021

WORKSHOP DATE: N/A

FUNDING SOURCE: N/A

DEPARTMENT DIRECTOR APPROVAL: [X]Yes [ ]No

STAFF PERSON RESPONSIBLE: Melissa Greiner
City Clerk/Administrative Services Director

DOCUMENTS ATTACHED: N/A

RECORD: [ ]Yes [X]No

CITY ATTORNEY REVIEW: [X]Yes [ ]N/A

SUBMITTED BY:

Melissa A. Greiner, CMC,
City Clerk/Administrative Services Director

REVIEWED BY:

Stephen N. Cole, Acting City Manager

RESOLUTION 4-2021

A RESOLUTION APPROVING CERTAIN SERVICE AGREEMENTS FOR CALENDAR YEAR 2021

STATE OF COLORADO
COUNTY OF GILPIN
CITY OF BLACK HAWK

Resolution No. 4-2021

TITLE: A RESOLUTION APPROVING CERTAIN SERVICE AGREEMENTS FOR CALENDAR YEAR 2021

NOW, THEREFORE, BE IT RESOLVED BY THE CITY COUNCIL OF THE CITY OF BLACK HAWK, COLORADO, THAT:

Section 1. The City Council hereby approves the Services Agreements for Community Planning and Development services, each with an amount not to exceed Fifty Thousand Dollars ($50,000.00) except as specifically set forth below for Baseline Engineering Corporation, with the entities and for the services set forth below (the "Agreements"), and authorizes the Mayor to sign the Agreements on behalf of the City.

Entity	Service	Amount
Atis Elevator Inspection	Conveyance	TBD
Baseline Engineering Corporation	Land Use	$100,000
Pinyon Environmental, Inc.	Historic Preservation	TBD (with $1,000) month retainer)
Weecycle Environmental Consulting	Environmental	TBD
Gonzales Custom Painting, Inc.	Paint	TBD
SAFEbuilt Colorado, LLC	Building Official, Plan Review, Inspection Services	TBD

RESOLVED AND PASSED this 13th day of January, 2021.

_____
David D. Spellman, Mayor

ATTEST:

_____
Melissa A. Greiner, CMC, City Clerk

CITY OF BLACK HAWK
REQUEST FOR COUNCIL ACTION

SUBJECT: A Resolution approving specific Community Planning and Development Professional Services Agreements for the calendar year 2021.

RECOMMENDATION: Staff recommends the following motion to the Mayor and Board of Aldermen:
MOTION TO APPROVE Resolution No. 4-2021 approving specific Community Planning and Development Professional Services Agreements for the calendar year 2021.

SUMMARY AND BACKGROUND OF SUBJECT MATTER:
Community Planning and Development use professional services to supplement City staff time, complement City staff expertise, provide an independent perspective, ensure credibility, and serve as a technical advisor to the department. The Professional Services Agreements are a budgeted item and completed according to the Scope of Work and Schedule of Values. Effective dates for these agreements are January 1, 2021, through January 12, 2022. Staff recommends using the following consultants:

Entity	Service	Amount
ATIS Elevator Inspection	Conveyance	TBD
Baseline Engineering Corporation	Land Use	$100,000
Pinyon Environmental, Inc.	Historic Preservation	TBD (with $1,000) month retainer)
Weecycle Environmental Consulting	Environmental	TBD
Gonzales Custom Painting, Inc.	Paint	TBD
SAFEbuilt Colorado, LLC	Building Official, Plan Review, Inspection Services	TBD

AGENDA DATE: January 13, 2021
WORKSHOP DATE: N/A
FUNDING SOURCE: 010-1901-4193319
010-1101-4115813
203-0000-5025800

DEPARTMENT DIRECTOR APPROVAL: [X]Yes [ ]No
STAFF PERSON RESPONSIBLE: Cynthia L. Linker, CP&D Director
DOCUMENTS ATTACHED: Resolution 4-2021
Professional Services Agreements

RECORD: [ ]Yes [X]No
CITY ATTORNEY REVIEW: [X]Yes [ ]N/A

SUBMITTED BY:

Cynthia L. Linker, CP&D Director

REVIEWED BY:

Stephen N. Cole, City Manager

CITY OF BLACK HAWK, COLORADO

AGREEMENT FOR PROFESSIONAL SERVICES
ATIS ELEVATOR INSPECTION

RESOLUTION 4-2021
JANUARY 13, 2021

AGREEMENT FOR PROFESSIONAL SERVICES

THIS AGREEMENT is made and entered into this **1st day of January, 2021** by and between the **CITY OF BLACK HAWK**, State of Colorado, a Colorado municipal corporation (hereinafter referred to as the "City") and **ATIS ELEVATOR INSPECTION** hereinafter referred to as "Contractor").

RECITALS:

A. The City requires **miscellaneous on-call inspections, plan review and consulting services for the ongoing maintenance of the Black Hawk Conveyance Program as established and administered by the City** (the "Project").

B. Contractor has held itself out to the City as having the requisite expertise and experience to perform the required work for the Project.

NOW, THEREFORE, it is hereby agreed for the consideration hereinafter set forth, that Contractor shall provide to the City **on-call conveyance consulting services, as described in Exhibit A.**

I. SCOPE OF SERVICES

Contractor shall complete the scope of services as described in **Exhibit A** attached hereto and incorporated herein by this reference. Contractor shall furnish all labor and materials to perform the work and services required for the complete and prompt execution and performance of all duties, obligations, and responsibilities for the Project.

II. THE CITY'S OBLIGATIONS/CONFIDENTIALITY

The City shall provide Contractor with reports and such other data as may be available to the City and reasonably required by Contractor to perform hereunder. No project information shall be disclosed by Contractor to third parties without the prior written consent of the City or pursuant to a lawful court order directing such disclosure. All documents provided by the City to Contractor shall be returned to the City. Contractor is authorized by the City to retain copies of such data and materials at Contractor's expense.

III. OWNERSHIP OF WORK PRODUCT

The City acknowledges that Contractor's documents produced under this Agreement are instruments of professional services. Nevertheless, upon payment to Contractor pursuant to this Agreement, all work, data, drawings, designs, plans, reports, computer programs (non-proprietary), computer input and output, analyses, tests, maps, surveys, or any other materials developed for this Project are, and shall be, the sole and exclusive property of the City. However, any reuse of the documents by the City without prior written authorization by Contractor other than for the specific intended purpose of this Agreement will be at the City's sole risk. Contractor will provide the City with a ten (10) day written notice prior to disposal of Project documents it has retained, during which time the City may take physical possession of same at the storage site.

IV. COMPENSATION

A. Compensation shall not exceed **amounts as described in Exhibit A-1 for the work described in Exhibit A.** Payment shall be made in accordance with the schedule of charges in **Exhibit A-1**. Invoices will be itemized and include hourly breakdown for all personnel and other charges.

B. Contractor may submit monthly or periodic statements requesting payment. Such request shall be based upon the amount and value of the work and services performed by Contractor under this Agreement except as otherwise supplemented or accompanied by such supporting data as may be required by the City.

1. All invoices, including Contractor's verified payment request, shall be submitted by Contractor to the City no later than the twenty-fourth (24th) day of each month for payment pursuant to the terms of this Agreement. In the event Contractor fails to submit any invoice on or before the twenty-fourth (24th) day of any given month, Contractor defers its right to payment pursuant to said late invoice until the twenty-fourth (24th) day of the following month.

2. Progress payments may be claimed on a monthly basis for reimbursable costs actually incurred to date as supported by detailed statements, including hourly breakdowns for all personnel and other charges. The amounts of all such monthly payments shall be paid within thirty (30) days after the timely receipt of invoice as provided by this Agreement.

C. The City has the right to ask for clarification on any Contractor invoice after receipt of the invoice by the City.

D. In the event payment for services rendered has not been made within forty-five (45) days from the receipt of the invoice for any uncontested billing, interest will accrue at the legal rate of interest. In the event payment has not been made within ninety (90) days from the receipt of the invoice for any uncontested billing, Contractor may, after giving seven (7) days written notice and without penalty or liability of any nature, suspend all work on all authorized services specified herein. In the event payment in full is not received within thirty (30) days of giving the seven (7) days written notice, Contractor may terminate this Agreement. Upon receipt of payment in full for services rendered, Contractor will continue with all authorized services.

E. Final payment shall be made within sixty (60) calendar days after all data and reports (which are suitable for reproduction and distribution by the City) required by this Agreement have been turned over to and approved by the City and upon receipt by the City of Contractor's certification that services required herein by Contractor have been fully completed in accordance with this Agreement and all data and reports for the Project.

V. COMMENCEMENT AND COMPLETION OF WORK

Contractor shall commence work upon the execution of this Agreement. This Agreement shall be completed by **January 12, 2022.**

VI. PROFESSIONAL RESPONSIBILITY

A. Contractor hereby represents that it is qualified to assume the responsibilities and render the services described herein and has all requisite corporate authority and professional licenses in good standing, required by law.

B. The work performed by Contractor shall be in accordance with generally accepted professional practices and the level of competency presently maintained by other practicing professional firms in the same or similar type of work in the applicable community.

C. Contractor shall be responsible for the professional quality, technical accuracy, timely completion, and coordination of all designs, drawings, specifications, reports, and other services furnished by Contractor under this Agreement. Contractor shall, without additional compensation, correct or resolve any errors or deficiencies in its designs, drawings, specifications, reports, and other services which fall below the standard of professional practice.

D. Approval by the City of drawings, designs, specifications, reports, and incidental work or materials furnished hereunder shall not in any way relieve Contractor of responsibility for technical adequacy of the work. Neither the City's review, approval, or acceptance of, nor payment for, any of the services shall be construed to operate as a waiver of any rights under this Agreement, and Contractor shall be and remain liable in accordance with applicable performance of any of the services furnished under this Agreement.

E. The rights and remedies of the City provided for under this Agreement are in addition to any other rights and remedies provided by law.

VII. COMPLIANCE WITH LAW

A. The work and services to be performed by Contractor hereunder shall be done in compliance with applicable laws, ordinances, rules, and regulations.

B. Illegal Aliens.

1. Certification. By entering into this Agreement, Contractor hereby certifies that, at the time of this certification, it does not knowingly employ or contract with an illegal alien who will perform work under the Agreement and that Contractor will participate in either the E-Verify Program administered by the United States Department of Homeland Security and Social Security Administration or the Department Program administered by the Colorado Department of Labor and Employment in order to confirm the employment eligibility of all employees who are newly hired for employment to perform work under the Agreement.

2. Prohibited Acts. Contractor shall not:

a. Knowingly employ or contract with an illegal alien to perform work under this Agreement; or

b. Enter into a contract with a subcontractor that fails to certify to Contractor that the subcontractor shall not knowingly employ or contract with an illegal alien to perform work under this Agreement.

3. Verification.

a. Contractor has confirmed the employment eligibility of all employees who are newly hired for employment to perform work under this Agreement through participation in either the E-Verify Program or the Department Program.

b. Contractor shall not use the E-Verify Program or the Department Program procedures to undertake pre-employment screening of job applicants while this Agreement is being performed.

c. If Contractor obtains actual knowledge that a subcontractor performing work under this Agreement knowingly employs or contracts with an illegal alien who is performing work under the Agreement, Contractor shall:

i. Notify the subcontractor and the City within three (3) days that Contractor has actual knowledge that the subcontractor is employing or contracting with an illegal alien who is performing work under the Agreement; and

ii. Terminate the subcontract with the subcontractor if within three (3) days of receiving the notice required pursuant to subparagraph (i) hereof, the subcontractor does not stop employing or contracting with the illegal alien who is performing work under the Agreement; except that Contractor shall not terminate the contract with the subcontractor if during such three (3) days the subcontractor provides information to establish that the subcontractor has not knowingly employed or contracted with an illegal alien who is performing work under the Agreement.

4. Duty to Comply with Investigations. Contractor shall comply with any reasonable request by the Colorado Department of Labor and Employment made in the course of an investigation conducted pursuant to C.R.S. § 8-17.5-102(5)(a) to ensure that Contractor is complying with the terms of this Agreement.

5. If Contractor does not currently employ any employees, Contractor shall sign the No Employee Affidavit attached hereto.

6. If Contractor wishes to verify the lawful presence of newly hired employees who perform work under the Agreement via the Department Program, Contractor shall sign the Department Program Affidavit attached hereto.

VIII. INDEMNIFICATION

A. INDEMNIFICATION – GENERAL: The City cannot and by this Agreement does not agree to indemnify, hold harmless, exonerate or assume the defense of the Contractor or any

other person or entity whatsoever, for any purpose whatsoever. Provided that the claims, demands, suits, actions or proceedings of any kind are not the result of professional negligence, the Contractor, to the fullest extent permitted by law, shall defend, indemnify and hold harmless the City, its Council members, officials, officers, directors, agents and employees from any and all claims, demands, suits, actions or proceedings of any kind or nature whatsoever, including worker's compensation claims, in any way resulting from or arising from the services rendered by Contractor, its employees, agents or sub-contractors, or others for whom the Contractor is legally liable, under this Agreement; provided, however, that the Contractor need not indemnify or save harmless the City, its Council members, its officers, agents and employees from damages resulting from the negligence of the Council members, officials, officers, directors, agents and employees.

B. INDEMNIFICATION FOR PROFESSIONAL NEGLIGENCE: The Contractor shall, to the fullest extent permitted by law, defend, indemnify and hold harmless the City, its Council members, and any of its officials, officers, directors, and employees from and against damages, liability, losses, costs and expenses, including reasonable attorney's fees, but only to the extent caused by or arising out of the negligent acts, errors or omissions of the Contractor, its employees, agents or subcontractors, or others for whom the Contractor is legally liable, in the performance of professional services under this Agreement. The Contractor is not obligated under this subparagraph VIII.B. to indemnify the City for the negligent acts of the City, its Council members, or any of its officials, officers, directors, agents and employees.

C. INDEMNIFICATION – COSTS: Contractor shall, to the fullest extent permitted by law, defend, investigate, handle, respond to, and provide defense for and defend against, any such liability, claims or demands at the sole expense of Contractor or, at the option of the City, agrees to pay the City or reimburse the City for the defense costs incurred by the City in connection with any such liability, claims or demands. Contractor shall, to the fullest extent permitted by law, defend and bear all other costs and expenses related thereto, including court costs and attorney fees, whether or not any such liability, claims or demands alleged are groundless, false or fraudulent. If it is determined by the final judgment of a court of any competent jurisdiction that such injury, loss or damage was caused in whole or in part by the act, omission or other fault of the City, its Council members, officials, officers, directors, agents and employees, the City shall reimburse Contractor for the portion of the judgment attributable to such act, omission or other fault of the City, its Council members, officials, officers, directors, agents and employees.

IX. INSURANCE

A. The Contractor agrees to obtain and maintain during the life of the Agreement, a policy or policies of insurance against all liability, claims, demands and other obligations assumed by the Contractor pursuant to Section VIII above. Such insurance shall be in addition to any other insurance requirements imposed by the Agreement or by law. The Contractor shall not be relieved of any liability, claims, demands, or other obligations assumed pursuant to Section VIII above, by reason of its failure to obtain and maintain during the life of the Agreement insurance in sufficient amounts, durations, or types.

B. Contractor shall obtain and maintain during the life of the Agreement, and shall cause any subcontractor to obtain and maintain during the life of the Agreement, the minimum insurance coverages listed below. Such coverages shall be obtained and maintained with forms and insurers acceptable to the City. All coverages shall be continuously maintained to cover all liability, claims, demands and other obligations assumed by the Contractor pursuant to Section VIII above. In the case of any claims-made policy, the necessary retroactive dates and extended reporting periods shall be procured to maintain such continuous coverage.

1. **Worker's Compensation Insurance** to cover obligations imposed by applicable law for any employee engaged in the performance of the work under the Agreement, and Employers Liability Insurance with minimum limits of six hundred thousand dollars ($600,000) each incident, one million dollars ($1,000,000) disease—policy limit, and one million dollars ($1,000,000) disease—each employee. Evidence of qualified self-insured status may be substituted for the worker's compensation requirements under this paragraph.

2. **Commercial general liability insurance** with minimum combined single limits of six hundred thousand dollars ($600,000) each occurrence and one million dollars ($1,000,000) general aggregate. The policy shall be applicable to all premises and operations. The policy shall include coverage for bodily injury broad form property damage (including completed operations), personal injury (including coverage for contractual and employee acts), blanket contractual products, and completed operations. This policy shall contain a severability of interests provision.

3. **Professional liability insurance** with minimum limits of six hundred, thousand dollars ($600,000) each claim and one million dollars ($1,000,000) general aggregate.

4. **The policy required by paragraph 2., above, shall be endorsed to include the City and the City's officers, employees, and Contractors as additional insureds**. The policy required in Paragraphs 1 and 2 above shall be primary insurance, and any insurance carried by the City, its officers, its employees, or its Contractors shall be excess and not contributory insurance to that provided by Contractor. No additional insured endorsement to the policy required by paragraph 1., above, shall contain any exclusion for bodily injury or property damage arising from completed operations. Contractor shall be solely responsible for any deductible losses under any policy required above.

5. The certificate of insurance provided for the City shall be completed by Contractor's insurance agent as evidence that policies providing the required coverages, conditions, and minimum limits are in full force and effect, and shall be reviewed and approved by the City prior to commencement of the Agreement. No other form of certificate shall be used. The certificate shall identify this Agreement and shall provide that the coverages afforded under the policies shall not be cancelled, terminated, or materially changed until at least thirty (30) days prior written notice has been given to the City. The completed certificate of insurance shall be sent to:

City of Black Hawk
P.O. Box 68
Black Hawk, Colorado 80422-0068
Attn: City Clerk

6. Failure on the part of Contractor to procure or maintain policies providing the required coverages, conditions, and minimum limits shall constitute a material breach of agreement upon which the City may immediately terminate this Agreement, or at its discretion, the City may procure or renew any such policy or any extended reporting period

thereto and may pay any and all premiums in connection therewith, and all monies so paid by the City shall be repaid by Contractor to the City upon demand, or the City may offset the cost of the premiums against any monies due to Contractor from the City.

7. The City reserves the right to request and receive a certified copy of any policy and any endorsement thereto.

8. The parties hereto understand and agree that the City, its officers, and its employees, are relying on, and do not waive or intend to waive by any provision of this Agreement, the monetary limitations or any other rights, immunities, and protections provided by the Colorado Governmental Immunity Act, Colo. Rev. Stat. §24-10-114 et seq., 13 Colo. Rev. Stat., as from time to time amended, or otherwise available to the City, its officers, its employees, or agents.

X. NON-ASSIGNABILITY

Neither this Agreement, nor any of the rights or obligations of the parties hereto, shall be assigned by either party without the written consent of the other.

XI. TERMINATION

This Agreement shall terminate upon the City's providing Contractor with thirty (30) days advance written notice. In the event the Agreement is terminated by the City's issuance of said written notice of intent to terminate, the City shall pay Contractor for all work previously authorized and completed prior to the date of termination. If, however, Contractor has substantially or materially breached the standards and terms of this Agreement, the City shall have any remedy or right of set-off available at law and equity. If the Agreement is terminated for any reason other than cause prior to completion of the Project, any use of documents by the City thereafter shall be at the City's sole risk, unless otherwise consented to by Contractor.

XII. VENUE

This Agreement shall be governed by the laws of the State of Colorado, and any legal action concerning the provisions hereof shall be brought in the County of Gilpin, State of Colorado.

XIII. INDEPENDENT CONTRACTOR

Contractor is an independent contractor. Notwithstanding any provision appearing in this Agreement, all personnel assigned by Contractor to perform work under the terms of this Agreement shall be, and remain at all times, employees or agents of Contractor for all purposes. Contractor shall make no representation that it is the employee of the City for any purpose.

XIV. NO WAIVER

Delays in enforcement or the waiver of any one or more defaults or breaches of this Agreement by the City shall not constitute a waiver of any of the other terms or obligations of this Agreement.

XV. NOTICE

Any notice or communication between Contractor and the City which may be required, or which may be given, under the terms of this Agreement, shall be in writing and shall be deemed to have been sufficiently given when directly presented or sent pre-paid, first class United States Mail, addressed as follows:

The City:

City of Black Hawk
P.O. Box 68
Black Hawk, Colorado 80422-0068
Attn: Cynthia Linker
Community Planning & Development Director

The Contractor:

Atis Elevator Inspection
12647 W. Dorado Place
Littleton, CO 80127
Attn: Russell Holt

XVI. ENTIRE AGREEMENT

This Agreement and the attached exhibits constitute the entire Agreement between Contractor and the City, superseding all prior oral or written communications. None of the provisions of this Agreement may be amended, modified, or changed, except as specified herein.

IN WITNESS WHEREOF, the parties hereto each herewith subscribe the same in duplicate.

CITY OF BLACK HAWK, COLORADO

By: _____
David D. Spellman, Mayor

ATTEST:

_____
Melissa A. Greiner, CMC
City Clerk

APPROVED AS TO FORM:

_____
Corey Y. Hoffmann, City Attorney

ATIS ELEVATOR INSPECTION

By: _____
Russell Holt
Its: Colorado Field Manager

STATE OF COLORADO)
) ss.
COUNTY OF Jefferson)

The foregoing instrument was subscribed, sworn to, and acknowledged before me this 4 day of Jan, 20 21, by **Russell Holt as the Colorado Field Manager for Atis Elevator Inspection.**

My commission expires: 5/23/23

(S E A L)

DEREK PAUL WICHMANN
NOTARY PUBLIC
STATE OF COLORADO
NOTARY ID 20154007415
MY COMMISSION EXPIRES 05/23/2023

_____
Notary Public

PROSPECTIVE CONTRACTOR'S CERTIFICATE REGARDING EMPLOYING OR CONTRACTING WITH AN ILLEGAL ALIEN

FROM: **Russell Holt, Colorado Field Manager**
Atis Elevator Inspection

TO: **City of Black Hawk**
P.O. Box 68
Black Hawk, Colorado 80422-0068

Project Name:
On-Call Professional Services Agreement - Conveyance Consulting

Bid Number: **N/A** Project Number: **N/A**

As a prospective Contractor for the above-identified bid, I (we) do hereby certify that, as of the date of this certification, I (we) do not knowingly employ or contract with an illegal alien who will perform work under the Agreement and that I (we) will confirm the employment eligibility of all employees who are newly hired for employment to perform work under the Agreement through participation in either the E-Verify Program administered by the United States Department of Homeland Security and Social Security Administration or the Department Program administered by the Colorado Department of Labor and Employment.

Executed this 4 day of Jan, 2021

DEREK PAUL WICHMANN
NOTARY PUBLIC
STATE OF COLORADO
NOTARY ID 20154007415
MY COMMISSION EXPIRES 06/23/2023

Prospective Contractor: **Atis Elevator Inspection**

By: _____
Russell Holt
Title: **Colorado Field Manager**

NO EMPLOYEE AFFIDAVIT

This Page Not Applicable

1. Check and complete one:

☒ I, _____, am a sole proprietor doing business as _____. I do not currently employ any individuals. Should I employ any individuals during the term of my Agreement with the City, I certify that I will comply with the lawful presence verification requirements outlined in that Agreement.

OR

☒ I, Russ _____, am an owner/member/shareholder of _____, a _____[specify type of entity-*i.e.*, corporation, limited liability company], that does not currently employ any individuals. Should I employ any individuals during the term of my Agreement with the City, I certify that I will comply with the lawful presence verification requirements outlined in that Agreement.

2. Check one.

☐ I, _____, am a United States citizen or legal permanent resident.

The City must verify this statement by reviewing one of the following items:

- *A valid Colorado Driver's license or a Colorado identification card*
- *A United States military card or a military dependent's identification card*
- *A United States Coast Guard Merchant Mariner card*
- *A Native American tribal document or*
- *In the case of a resident of another state, the driver's license or state-issued identification card from the state of residence, if that state requires the applicant to prove lawful presence prior to the issuance of the identification card*
- *Any other documents or combination of documents listed in the City's "Acceptable Documents for Lawful Presence Verification" chart that prove both the contractor's citizenship/lawful presence and identity.*

OR

☐ I am otherwise lawfully present in the United States pursuant to federal law.

Contractor must verify this statement through the federal systematic alien verification of entitlement program, the "SAVE" program, and provide such verification to the City.

_____ 1/14/20

Signature Date

NO EMPLOYEE AFFIDAVIT

This Page Not Applicable

1. Check and complete one:

☐ I, _____, am a sole proprietor doing business as _____. I do not currently employ any individuals. Should I employ any individuals during the term of my Agreement with the City, I certify that I will comply with the lawful presence verification requirements outlined in that Agreement.

OR

☐ I, _____, am an owner/member/shareholder of _____, a _____[specify type of entity-*i.e.*, corporation, limited liability company], that does not currently employ any individuals. Should I employ any individuals during the term of my Agreement with the City, I certify that I will comply with the lawful presence verification requirements outlined in that Agreement.

2. Check one.

☐ I, _____, am a United States citizen or legal permanent resident.

The City must verify this statement by reviewing one of the following items:

- *A valid Colorado Driver's license or a Colorado identification card*
- *A United States military card or a military dependent's identification card*
- *A United States Coast Guard Merchant Mariner card*
- *A Native American tribal document or*
- *In the case of a resident of another state, the driver's license or state-issued identification card from the state of residence, if that state requires the applicant to prove lawful presence prior to the issuance of the identification card*
- *Any other documents or combination of documents listed in the City's "Acceptable Documents for Lawful Presence Verification" chart that prove both the contractor's citizenship/lawful presence and identity.*

OR

☐ I am otherwise lawfully present in the United States pursuant to federal law.

Contractor must verify this statement through the federal systematic alien verification of entitlement program, the "SAVE" program, and provide such verification to the City.

_____ _____

Signature Date

DEPARTMENT PROGRAM AFFIDAVIT

(To be completed if Contractor participates in the Department of Labor Lawful Presence Verification Program)

I, **Russell Holt**, as a public contractor under contract with the City of Black Hawk (the "City"), hereby affirm that:

1. I have examined or will examine the legal work status of all employees who are newly hired for employment to perform work under this public contract for services ("Contract") with the Town within twenty (20) days after such hiring date;

2. I have retained or will retain file copies of all documents required by 8 U.S.C. § 1324a, which verify the employment eligibility and identity of newly hired employees who perform work under the Agreement; and

3. I have not and will not alter or falsify the identification documents for my newly hired employees who perform work under the Agreement.

Contractor Signature

1/4/20
Date

Russell Holt, Colorado Field Manager
Atis Elevator Inspection

STATE OF COLORADO)
) ss.
COUNTY OF Jefferson)

The foregoing instrument was subscribed, sworn to, and acknowledged before me this 4 day of Jan, 20 21, by **Russell Holt as the Colorado Field Manager for Atis Elevator Inspection.**

My commission expires: 5/23/23

(S E A L)

DEREK PAUL WICHMANN
NOTARY PUBLIC
STATE OF COLORADO
NOTARY ID 20154007415
MY COMMISSION EXPIRES 05/23/2023

Notary Public

ACCEPTABLE DOCUMENTS FOR LAWFUL PRESENCE VERIFICATION

Documents that Serve to Prove Citizenship/Lawful Presence and Identification:

- Colorado Driver's License or Identification Card
- Out of State drivers license from: AL, AZ, AR, CA, CT, DE, DC, FL, GA, ID, IN, IA, KS, KY, LA, ME, MN, MS, MO, MT, NV, NH, NJ, NY, ND, OH, OK, PA, RI, SC, SD, VA, WV, WY
- A United States Military Card of a Military Dependent's Identification Card
- A United States Coast Guard or Merchant Mariner Card
- A Native American Tribal Document
- Certificate of Naturalization with Photograph
- Certificate of U.S. Citizenship with Photograph
- U.S. Passport (less than 5 years old)
- Northern Mariana Identification Card with Photograph

OR

Documents that Only Serve to Prove Citizenship/Lawful Presence:

- U.S. Birth Certificate
- Certification of Report of Birth from Department of State
- Report of Birth Abroad of a U.S. Citizen
- U.S. Citizen Identification Card
- Final Adoption Decree
- Evidence of U.S. Civil Service Employment before June 1, 1976
- Statement Provided by U.S. Consular Officer Certifying Citizenship
- Religious Records Recorded in the 50 states, D.C., or a U.S. Territory Showing Birth Date or Child's Age and Location of Birth in U.S.
- Early School Records
- Census Records
- Other Documents that Establish a U.S. Place of Birth or in Some Way Indicates U.S. Citizenship

AND

Documents that Serve to Prove Identification:

- A Driver's License or Identification Card Regardless of the State of Issuance
- School Identification Card with Photograph
- Identification Card Issued by Federal, State or Local Government
- A Driver's License Issued by a Canadian Government Authority

EXHIBIT A

SCOPE OF SERVICES – 2021
ATIS ELEVATOR INSPECTION

Atis Elevator Inspection shall provide this Scope of Services to the City of Black Hawk, which includes, but may not be limited to, the following tasks:

1. All inspections shall be conducted Monday, Tuesday and/or Wednesday between the hours of 8:00 a.m. and 5:00 p.m. No inspections will be conducted on Municipal or National Holidays.
2. For identification purposes, all inspectors shall wear a company logo shirt and a photo identification badge.
3. All Category 1 (period inspections) and Category 5 (5-year inspections) for existing conveyances within the City of Black Hawk.
4. All required plan reviews and acceptance inspections for new and modernized conveyances within the City of Black Hawk.
5. Plan reviews as required for all minor and major repairs requiring permits and conduct required inspections at the completion of the repairs.
6. All inspections shall follow the State of Colorado Conveyance regulations and any amendments adopted by the City of Black Hawk.
7. All Temporary Certificates of Occupancy (TCO) issued by the City of Black Hawk shall require a follow up inspection by Atis Elevator Inspection within the 60-day time frame.
8. All reports shall be electronically delivered to the City of Black Hawk within two weeks or less of the inspection in a Word and PDF format. All violations noted on said report shall include the supporting code reference.
9. Any database or other form of electronically transferring of files as required by the City of Black Hawk shall be accepted by Atis Elevator Inspection.
10. Follow and enforce the Conveyance program as adopted and administered by the City of Black Hawk.
11. As requested by the City of Black Hawk, Atis Elevator Inspection shall advise and assist in the development and enforcement of the Conveyance program.
12. A representative from Atis Elevator Inspection shall attend monthly Development Review Committee or active construction meetings as required.
13. Assist the Black Hawk Fire Department, as requested, with elevator related issues and/or code adoptions.
14. All required electrical permits associated with a Conveyance project hall fall under the Electrical Permit Fee Schedule as adopted by the City of Black Hawk.
15. All required building permits associated with a Conveyance project shall fall under the Building Permit Fee schedule as adopted by the City of Black Hawk.

All of the items outlined in this Scope of Services shall follow the Scope of Service/Fee Schedule as described in Exhibit A-1.

EXHIBIT A-1

SCHEDULE OF CHARGES - 2021
ATIS ELEVATOR INSPECTION

Exhibit A-1 2021 ASES Conveyance Fees		
INSPECTION SERVICES		
TYPE	**PER UNIT**	**DESCRIPTION**
Hydraulic Periodic	$155.00	1-1.5 hours. Includes initial inspection plus one follow-up on a TCO.
Hydraulic Roped Periodic	$210.00	1.5-2 hours. Includes initial inspection plus one follow-up on a TCO.
Traction Periodic	$210.00	1.5-2 hours. Includes initial inspection plus one follow-up on a TCO.
Temporary Certificate of Operation (TCO) 2nd Follow-up	$310.00	Follow-up on TCO as necessary.
Hydraulic 5 Year	$210.00	Witnessed annual safety test (2 hours). Includes initial inspection plus one follow-up on a TCO.
Hydraulic Roped 5 Year	$375.00	Witnessed annual safety test (3 hours). Includes initial inspection plus one follow-up on a TCO.
Traction 5 Year	$520.00	Witnessed safety test with weights (4 hours). Includes initial inspection plus one follow-up on a TCO.
Escalator Annual	$675.00	Colorado - Category 5 test annual.
Plan Review	$475.00	Includes initial review and 1 response. Plan will be reviewed for code compliance before work begins
Like Plan Review	80%	Elevators of the same nature in the same bank will be at 80% of the per unit cost
Revised Plan Review	$155.00 Per Hour	Plan will be reviewed for code compliance before work begins
Lift Periodic(platform, chair, etc.)	$155.00	All lifts other than those described above
Dumbwaiter Periodic	$155.00	Typically small units, only used for material
Hydraulic Acceptance	$525.00	Initial safety test performed with weights. New construction, modernization or turnover
Traction Acceptance	$525.00	Initial safety test performed with weights. New construction, modernization or turnover
Escalator Acceptance	$700.00	Initial safety test. All safety test items checked. New construction, modernization or turnover
Dumbwaiter/Lift Acceptance	$355.00	Initial safety test. All safety test items checked. New construction, modernization or turnover
Any Re-inspect Fee	Same as initial fee	
Inspections Outside of Normal Business Hours	Same as initial fee	with a two (2) hour minimum
CONSULTING SERVICES		
TYPE	**PER UNIT/ PER HOUR**	**DESCRIPTION**
Maintenance Evaluation < 10 Tractions	$525/per unit	Provide a detailed evaluation of maintenance performed along with code items in a professional report
Maintenance Evaluation ≥ 10 Tractions	$420/per unit	Provide a detailed evaluation of maintenance performed along with code items in a professional report
Maintenance Evaluation < 10 Hydraulic	$455/per unit	Provide a detailed evaluation of maintenance performed along with code items in a professional report
Maintenance Evaluation ≥ 10 Hydraulic	$360/per unit	Provide a detailed evaluation of maintenance performed along with code items in a professional report
OSHA 10 hour training - 10 person min	$1500/per unit	For those wishing to obtain their OSHA 10 hour card
OSHA 30 hour training - 10 person min	$3900/per unit	For those wishing to obtain their OSHA 30 hour card
Conveyance Operation Training	$135/per hour	Provides owners/manager/maintenance personnel with knowledge of all operations of chosen conveyances
Required Presence	$135/per hour	Any necessary request for our presence i.e. meetings, etc. Travel time not included
Compliance Training	$135/per hour	Help owners/managers/maintenance understand their part in keeping units code compliant
DRC Attendance / Once a Month	N/C	
Capitol Plans	$840/unit	Review of conveyance with plan for future improvements and necessary repairs. Includes performance review
Contract Review	$780/unit	Review current contract and help in writing new contracts
Providing operator to run conveyance	$155/per hour	If necessary to perform work in hoistway, an operator can be provided that qualifies under state statute
Conveyance Incident Investigation	$135/per hour	Incident investigation is conveyance taken out of service
Consulting / Miscellaneous Services	$135/per hour	Includes all miscellaneous services not listed

PERMITS		
TYPE	**PERMIT FEE**	**DESCRIPTION**
*Minor Alteration/Commercial	$575.00	Fee Includes: Plan Review and 1 Inspection/ If additional work by the Inspector is indicated the hourly consulting rate shall apply
**Major Alteration/Commercial	$865.00	Fee Includes: Plan Review and 1 Inspection/ If additional work by the Inspector is indicated the hourly consulting rate shall apply
Residential Elevator, Platform Lift or Dumbwaiter	$575.00	Fee Includes: Plan Review and 1 Inspection/ If additional work by the Inspector is indicated the hourly consulting rate shall apply
MISCELLANEOUS		
TYPE	**PER UNIT**	**DESCRIPTION**
Special Investigation Fee - Starting work without a permit	$500.00 $1,000.00 $1500.00	1st Occurrence plus 15% City Administration Fee 2nd Occurrence plus 15% City Administration Fee 3rd Occurrence and Each Additional plus 15% City Administration Fee
Expert Witness / Court Testimony	Actual Cost	plus 15% City Administration Fee
Consultant Administration Fee:	$150.00/per hour	Fee covers administrative costs such as an inspection scheduling, inspection resulting, and recordkeeping not handled by the CoBH.
CoBH Administration Fee:		A CoBH 15% City Administration Fee shall be added to each invoice generated by the CoBH Finance Department.
* **Minor Alteration includes:** cab finishes, valve work, power unit install, door operator replacement, re-rope/brake suspension, escalator handrails.		
****Major Alteration includes**: controller, signal fixtures, rotating equipment, drive(multiple components), fire alarm, fire recall.		
Electrical Permit: if a electrical permit is required, the cost shall fall under the Electrical Permit Fee Schedule as adopted by the CoBH.		
Building Permit: If a building permit is also required, the cost shall fall under the Building Permit Fee Schedule as adopted by the CoBH.		
Fire Permit: If a fire permit is also required, the cost shall fall under the Fire Permit Fee Schedule as adopted by the CoBH.		

INSURANCE CERTIFICATE

CERTIFICATE OF LIABILITY INSURANCE

DATE (MM/DD/YYYY): 12/29/2020

THIS CERTIFICATE IS ISSUED AS A MATTER OF INFORMATION ONLY AND CONFERS NO RIGHTS UPON THE CERTIFICATE HOLDER. THIS CERTIFICATE DOES NOT AFFIRMATIVELY OR NEGATIVELY AMEND, EXTEND OR ALTER THE COVERAGE AFFORDED BY THE POLICIES BELOW. THIS CERTIFICATE OF INSURANCE DOES NOT CONSTITUTE A CONTRACT BETWEEN THE ISSUING INSURER(S), AUTHORIZED REPRESENTATIVE OR PRODUCER, AND THE CERTIFICATE HOLDER.

IMPORTANT: If the certificate holder is an ADDITIONAL INSURED, the policy(ies) must be endorsed. If SUBROGATION IS WAIVED, subject to the terms and conditions of the policy, certain policies may require an endorsement. A statement on this certificate does not confer rights to the certificate holder in lieu of such endorsement(s).

PRODUCER	CONTACT NAME: Darren HSIA-Helmkamp	
Weiss Insurance 683 Trade Center BLVD STE 130 Chesterfield MO 63005	PHONE (A/C, No, Ext): (636)534-7256	FAX (A/C, No): (636)534-7956
	E-MAIL ADDRESS: darrenhelmkamp@weiss-ins.com	

INSURED	INSURER(S) AFFORDING COVERAGE	NAIC #
ATIS Elevator Inspetions LLC Formerly CNY Elevator Inspections, LLC & A Smart Elevator Solution & KH Lemp Elevator Consulting Services 2127 Innerbelt Business Center Drive Suite 210 Saint Louis MO 63114	INSURER A: Liberty Surplus Insurance Corp	10725
	INSURER B: Endurance American & RSUI	10641
	INSURER C: National Liability & Fire Ins. Co.	20052
	INSURER D: Admiral Ins Co. & Lloyds of London	24856
	INSURER E: The Hanover Insurance Company	22292
	INSURER F:	

COVERAGES **CERTIFICATE NUMBER:** CL20121143263 **REVISION NUMBER:**

THIS IS TO CERTIFY THAT THE POLICIES OF INSURANCE LISTED BELOW HAVE BEEN ISSUED TO THE INSURED NAMED ABOVE FOR THE POLICY PERIOD INDICATED. NOTWITHSTANDING ANY REQUIREMENT, TERM OR CONDITION OF ANY CONTRACT OR OTHER DOCUMENT WITH RESPECT TO WHICH THIS CERTIFICATE MAY BE ISSUED OR MAY PERTAIN, THE INSURANCE AFFORDED BY THE POLICIES DESCRIBED HEREIN IS SUBJECT TO ALL THE TERMS, EXCLUSIONS AND CONDITIONS OF SUCH POLICIES. LIMITS SHOWN MAY HAVE BEEN REDUCED BY PAID CLAIMS.

INSR LTR	TYPE OF INSURANCE	ADDL INSD	SUBR WVD	POLICY NUMBER	POLICY EFF (MM/DD/YYYY)	POLICY EXP (MM/DD/YYYY)	LIMITS		
A	x COMMERCIAL GENERAL LIABILITY [ ] CLAIMS-MADE [x] OCCUR x Per Project Aggregate x Contractual Liab. Included GEN'L AGGREGATE LIMIT APPLIES PER: [ ] POLICY [x] PRO-JECT [ ] LOC [ ] OTHER:			1000238481-05	12/10/2020	12/10/2021	EACH OCCURRENCE	$	1,000,000
							DAMAGE TO RENTED PREMISES (Ea occurrence)	$	500,000
							MED EXP (Any one person)	$	10,000
							PERSONAL & ADV INJURY	$	1,000,000
							GENERAL AGGREGATE	$	2,000,000
							PRODUCTS - COMP/OP AGG	$	2,000,000
								$	
	AUTOMOBILE LIABILITY [ ] ANY AUTO [ ] ALL OWNED AUTOS [ ] SCHEDULED AUTOS [ ] HIRED AUTOS [ ] NON-OWNED AUTOS						COMBINED SINGLE LIMIT (Ea accident)	$	
							BODILY INJURY (Per person)	$	
							BODILY INJURY (Per accident)	$	
							PROPERTY DAMAGE (Per accident)	$	
							APLUS	$	
B	[ ] UMBRELLA LIAB [X] OCCUR X EXCESS LIAB [ ] CLAIMS-MADE [ ] DED [ ] RETENTION $			EXC30000224004 & NHA092362	12/10/2020	12/10/2021	EACH OCCURRENCE	$	9,000,000
							AGGREGATE	$	9,000,000
								$	
C	WORKERS COMPENSATION AND EMPLOYERS' LIABILITY ANY PROPRIETOR/PARTNER/EXECUTIVE OFFICER/MEMBER EXCLUDED? (Mandatory in NH) Y/N: y N/A If yes, describe under DESCRIPTION OF OPERATIONS below			V9WC212819	1/1/2021	1/1/2022	X PER STATUTE [ ] OTH-ER		
							E.L. EACH ACCIDENT	$	1,000,000
							E.L. DISEASE - EA EMPLOYEE	$	1,000,000
							E.L. DISEASE - POLICY LIMIT	$	1,000,000
D	Professional			EO00003140706&B0621PATIS000320	12/10/2020	12/10/2021	Per Claim & Aggregate		$5,000,000
E	Crime			BDKD862898	12/10/2020	12/10/2021	Per Claim & Aggregate		$1,000,000

DESCRIPTION OF OPERATIONS / LOCATIONS / VEHICLES (ACORD 101, Additional Remarks Schedule, may be attached if more space is required)

Elevator or Escalator Inspecting & Consulting. Company President Wayne Smith is excluded from Workers Compensation.

CERTIFICATE HOLDER

City of Blackhawk
211 Church St
Black Hawk, CO 80422

CANCELLATION

SHOULD ANY OF THE ABOVE DESCRIBED POLICIES BE CANCELLED BEFORE THE EXPIRATION DATE THEREOF, NOTICE WILL BE DELIVERED IN ACCORDANCE WITH THE POLICY PROVISIONS.

AUTHORIZED REPRESENTATIVE

D HSIA-Helmkamp/SMITH Darren Helmkamp

© 1988-2014 ACORD CORPORATION. All rights reserved.

COMMENTS/REMARKS

$9,000,000 Excess policy is met by $5,000,000 limit through Endurance and $4,000,000 through RSUI. Underlying policies include general liability, workers compensation, and commercial auto. Auto is insured through another broker.

$5,000,000 Professional policy limit is met through $3,000,000 through Admiral and $2,000,000 through Lloyd's of London.

NAIC # for RSUI is #22314
NAIC # for Lloyd's of London is #AA112

COPYRIGHT 2000, AMS SERVICES INC.

Additional Named Insureds

Other Named Insureds

ATIS Elevator Inspetions LLC

Doing Business As

COPYRIGHT 2007, AMS SERVICES INC

ADDITIONAL COVERAGES

Ref #	Description	Coverage Code	Form No.	Edition Date

Limit 1	Limit 2	Limit 3	Deductible Amount	Deductible Type	Premium

Ref #	Description	Coverage Code	Form No.	Edition Date
	Underinsured motorist combined single limit	UNCSL		

Limit 1	Limit 2	Limit 3	Deductible Amount	Deductible Type	Premium
1,000,000					

Ref #	Description	Coverage Code	Form No.	Edition Date
	Fellow employee liability	FELIA		

Limit 1	Limit 2	Limit 3	Deductible Amount	Deductible Type	Premium

Ref #	Description	Coverage Code	Form No.	Edition Date
	Medical payments	MEDPM		

Limit 1	Limit 2	Limit 3	Deductible Amount	Deductible Type	Premium
5,000					

Ref #	Description	Coverage Code	Form No.	Edition Date
	Schedule Mod Factor 1	SCH01		

Limit 1	Limit 2	Limit 3	Deductible Amount	Deductible Type	Premium

Ref #	Description	Coverage Code	Form No.	Edition Date
	Uninsured motorist combined single limit	UMCSL		

Limit 1	Limit 2	Limit 3	Deductible Amount	Deductible Type	Premium
1,000,000					

Ref #	Description	Coverage Code	Form No.	Edition Date

Limit 1	Limit 2	Limit 3	Deductible Amount	Deductible Type	Premium

Ref #	Description	Coverage Code	Form No.	Edition Date

Limit 1	Limit 2	Limit 3	Deductible Amount	Deductible Type	Premium

Ref #	Description	Coverage Code	Form No.	Edition Date

Limit 1	Limit 2	Limit 3	Deductible Amount	Deductible Type	Premium

Ref #	Description	Coverage Code	Form No.	Edition Date

Limit 1	Limit 2	Limit 3	Deductible Amount	Deductible Type	Premium

Ref #	Description	Coverage Code	Form No.	Edition Date

Limit 1	Limit 2	Limit 3	Deductible Amount	Deductible Type	Premium

OFADTLCV

Copyright 2001, AMS Services, Inc.

CITY OF BLACK HAWK, COLORADO

AGREEMENT FOR PROFESSIONAL SERVICES
BASELINE ENGINEERING CORPORATION

RESOLUTION 4-2021
JANUARY 13, 2021

AGREEMENT FOR PROFESSIONAL SERVICES

THIS AGREEMENT is made and entered into this **1st day of January, 2021** by and between the **CITY OF BLACK HAWK**, State of Colorado, a Colorado municipal corporation (hereinafter referred to as the "City") and **BASELINE ENGINEERING CORPORATION** hereinafter referred to as "Contractor").

RECITALS:

A. The City requires **miscellaneous on-call consulting services for planning, land use and development review** (the "Project").

B. Contractor has held itself out to the City as having the requisite expertise and experience to perform the required work for the Project.

NOW, THEREFORE, it is hereby agreed for the consideration hereinafter set forth, that Contractor shall provide to the City **on-call consulting services on various planning, land use and development review, as described in Exhibit A.**

I. SCOPE OF SERVICES

Contractor shall complete the scope of services as described in **Exhibit A** attached hereto and incorporated herein by this reference. Contractor shall furnish all labor and materials to perform the work and services required for the complete and prompt execution and performance of all duties, obligations, and responsibilities for the Project.

II. THE CITY'S OBLIGATIONS/CONFIDENTIALITY

The City shall provide Contractor with reports and such other data as may be available to the City and reasonably required by Contractor to perform hereunder. No project information shall be disclosed by Contractor to third parties without the prior written consent of the City or pursuant to a lawful court order directing such disclosure. All documents provided by the City to Contractor shall be returned to the City. Contractor is authorized by the City to retain copies of such data and materials at Contractor's expense.

III. OWNERSHIP OF WORK PRODUCT

The City acknowledges that Contractor's documents produced under this Agreement are instruments of professional services. Nevertheless, upon payment to Contractor pursuant to this Agreement, all work, data, drawings, designs, plans, reports, computer programs (non-proprietary), computer input and output, analyses, tests, maps, surveys, or any other materials developed for this Project are, and shall be, the sole and exclusive property of the City. However, any reuse of the documents by the City without prior written authorization by Contractor other than for the specific intended purpose of this Agreement will be at the City's sole risk. Contractor will provide the City with a ten (10) day written notice prior to disposal of Project documents it has retained, during which time the City may take physical possession of same at the storage site.

IV. COMPENSATION

A. Compensation shall not exceed **$100,000 without prior approval for the work described in Exhibit A. Special Projects require prior approval with Baseline providing a quote based on the attached schedule of charges in Exhibit A-1.** Payment shall be made in accordance with the schedule of charges in **Exhibit A-1**. Invoices will be itemized and include hourly breakdown for all personnel and other charges.

B. Contractor may submit monthly or periodic statements requesting payment. Such request shall be based upon the amount and value of the work and services performed by Contractor under this Agreement except as otherwise supplemented or accompanied by such supporting data as may be required by the City.

1. All invoices, including Contractor's verified payment request, shall be submitted by Contractor to the City no later than the twenty-fourth (24th) day of each month for payment pursuant to the terms of this Agreement. In the event Contractor fails to submit any invoice on or before the twenty-fourth (24th) day of any given month, Contractor defers its right to payment pursuant to said late invoice until the twenty-fourth (24th) day of the following month.

2. Progress payments may be claimed on a monthly basis for reimbursable costs actually incurred to date as supported by detailed statements, including hourly breakdowns for all personnel and other charges. The amounts of all such monthly payments shall be paid within thirty (30) days after the timely receipt of invoice as provided by this Agreement.

C. The City has the right to ask for clarification on any Contractor invoice after receipt of the invoice by the City.

D. In the event payment for services rendered has not been made within forty-five (45) days from the receipt of the invoice for any uncontested billing, interest will accrue at the legal rate of interest. In the event payment has not been made within ninety (90) days from the receipt of the invoice for any uncontested billing, Contractor may, after giving seven (7) days written notice and without penalty or liability of any nature, suspend all work on all authorized services specified herein. In the event payment in full is not received within thirty (30) days of giving the seven (7) days written notice, Contractor may terminate this Agreement. Upon receipt of payment in full for services rendered, Contractor will continue with all authorized services.

E. Final payment shall be made within sixty (60) calendar days after all data and reports (which are suitable for reproduction and distribution by the City) required by this Agreement have been turned over to and approved by the City and upon receipt by the City of Contractor's certification that services required herein by Contractor have been fully completed in accordance with this Agreement and all data and reports for the Project.

V. COMMENCEMENT AND COMPLETION OF WORK

Contractor shall commence work upon the execution of this Agreement. This Agreement shall be completed by **January 12, 2022.**

VI. PROFESSIONAL RESPONSIBILITY

A. Contractor hereby represents that it is qualified to assume the responsibilities and render the services described herein and has all requisite corporate authority and professional licenses in good standing, required by law.

B. The work performed by Contractor shall be in accordance with generally accepted professional practices and the level of competency presently maintained by other practicing professional firms in the same or similar type of work in the applicable community.

C. Contractor shall be responsible for the professional quality, technical accuracy, timely completion, and coordination of all designs, drawings, specifications, reports, and other services furnished by Contractor under this Agreement. Contractor shall, without additional compensation, correct or resolve any errors or deficiencies in its designs, drawings, specifications, reports, and other services which fall below the standard of professional practice.

D. Approval by the City of drawings, designs, specifications, reports, and incidental work or materials furnished hereunder shall not in any way relieve Contractor of responsibility for technical adequacy of the work. Neither the City's review, approval, or acceptance of, nor payment for, any of the services shall be construed to operate as a waiver of any rights under this Agreement, and Contractor shall be and remain liable in accordance with applicable performance of any of the services furnished under this Agreement.

E. The rights and remedies of the City provided for under this Agreement are in addition to any other rights and remedies provided by law.

VII. COMPLIANCE WITH LAW

A. The work and services to be performed by Contractor hereunder shall be done in compliance with applicable laws, ordinances, rules, and regulations.

B. Illegal Aliens.

1. Certification. By entering into this Agreement, Contractor hereby certifies that, at the time of this certification, it does not knowingly employ or contract with an illegal alien who will perform work under the Agreement and that Contractor will participate in either the E-Verify Program administered by the United States Department of Homeland Security and Social Security Administration or the Department Program administered by the Colorado Department of Labor and Employment in order to confirm the employment eligibility of all employees who are newly hired for employment to perform work under the Agreement.

2. Prohibited Acts. Contractor shall not:

a. Knowingly employ or contract with an illegal alien to perform work under this Agreement; or

b. Enter into a contract with a subcontractor that fails to certify to Contractor that the subcontractor shall not knowingly employ or contract with an illegal alien to perform work under this Agreement.

3. Verification.

a. Contractor has confirmed the employment eligibility of all employees who are newly hired for employment to perform work under this Agreement through participation in either the E-Verify Program or the Department Program.

b. Contractor shall not use the E-Verify Program or the Department Program procedures to undertake pre-employment screening of job applicants while this Agreement is being performed.

c. If Contractor obtains actual knowledge that a subcontractor performing work under this Agreement knowingly employs or contracts with an illegal alien who is performing work under the Agreement, Contractor shall:

i. Notify the subcontractor and the City within three (3) days that Contractor has actual knowledge that the subcontractor is employing or contracting with an illegal alien who is performing work under the Agreement; and

ii. Terminate the subcontract with the subcontractor if within three (3) days of receiving the notice required pursuant to subparagraph (i) hereof, the subcontractor does not stop employing or contracting with the illegal alien who is performing work under the Agreement; except that Contractor shall not terminate the contract with the subcontractor if during such three (3) days the subcontractor provides information to establish that the subcontractor has not knowingly employed or contracted with an illegal alien who is performing work under the Agreement.

4. Duty to Comply with Investigations. Contractor shall comply with any reasonable request by the Colorado Department of Labor and Employment made in the course of an investigation conducted pursuant to C.R.S. § 8-17.5-102(5)(a) to ensure that Contractor is complying with the terms of this Agreement.

5. If Contractor does not currently employ any employees, Contractor shall sign the No Employee Affidavit attached hereto.

6. If Contractor wishes to verify the lawful presence of newly hired employees who perform work under the Agreement via the Department Program, Contractor shall sign the Department Program Affidavit attached hereto.

VIII. INDEMNIFICATION

A. INDEMNIFICATION – GENERAL: The City cannot and by this Agreement does not agree to indemnify, hold harmless, exonerate or assume the defense of the Contractor or any other person or entity whatsoever, for any purpose whatsoever. Provided that the claims, demands, suits, actions or proceedings of any kind are not the result of professional negligence, the Contractor, to the fullest extent permitted by law, shall defend, indemnify and hold harmless the City, its Council members, officials, officers, directors, agents and employees from any and all claims, demands, suits, actions or proceedings of any kind or nature whatsoever, including worker's compensation claims, in any way resulting from or arising from the services rendered by Contractor, its employees, agents or sub-contractors, or others for whom the Contractor is legally liable, under this Agreement; provided, however, that the Contractor need not indemnify or save harmless the City, its Council members, its officers, agents and employees from damages resulting from the negligence of the Council members, officials, officers, directors, agents and employees.

B. INDEMNIFICATION FOR PROFESSIONAL NEGLIGENCE: The Contractor shall, to the fullest extent permitted by law, defend, indemnify and hold harmless the City, its Council members, and any of its officials, officers, directors, and employees from and against damages, liability, losses, costs and expenses, including reasonable attorney's fees, but only to the extent caused by or arising out of the negligent acts, errors or omissions of the Contractor, its employees, agents or subcontractors, or others for whom the Contractor is legally liable, in the performance of professional services under this Agreement. The Contractor is not obligated under this subparagraph VIII.B. to indemnify the City for the negligent acts of the City, its Council members, or any of its officials, officers, directors, agents and employees.

C. INDEMNIFICATION – COSTS: Contractor shall, to the fullest extent permitted by law, defend, investigate, handle, respond to, and provide defense for and defend against, any such liability, claims or demands at the sole expense of Contractor or, at the option of the City, agrees to pay the City or reimburse the City for the defense costs incurred by the City in connection with any such liability, claims or demands. Contractor shall, to the fullest extent permitted by law, defend and bear all other costs and expenses related thereto, including court costs and attorney fees, whether or not any such liability, claims or demands alleged are groundless, false or fraudulent. If it is determined by the final judgment of a court of any competent jurisdiction that such injury, loss or damage was caused in whole or in part by the act, omission or other fault of the City, its Council members, officials, officers, directors, agents and employees, the City shall reimburse Contractor for the portion of the judgment attributable to such act, omission or other fault of the City, its Council members, officials, officers, directors, agents and employees.

IX. INSURANCE

A. The Contractor agrees to obtain and maintain during the life of the Agreement, a policy or policies of insurance against all liability, claims, demands and other obligations assumed by the Contractor pursuant to Section VIII above. Such insurance shall be in addition to any other insurance requirements imposed by the Agreement or by law. The Contractor shall not be relieved of any liability, claims, demands, or other obligations assumed pursuant to Section VIII above, by reason of its failure to obtain and maintain during the life of the Agreement insurance in sufficient amounts, durations, or types.

B. Contractor shall obtain and maintain during the life of the Agreement, and shall cause any subcontractor to obtain and maintain during the life of the Agreement, the minimum insurance coverages listed below. Such coverages shall be obtained and maintained with forms and insurers acceptable to the City. All coverages shall be continuously maintained to cover all liability, claims, demands and other obligations assumed by the Contractor pursuant to Section VIII above. In the case of any claims-made policy, the necessary retroactive dates and extended reporting periods shall be procured to maintain such continuous coverage.

1. **Worker's Compensation Insurance** to cover obligations imposed by applicable law for any employee engaged in the performance of the work under the Agreement, and Employers Liability Insurance with minimum limits of six hundred thousand dollars ($600,000) each incident, one million dollars ($1,000,000) disease—policy limit, and one million dollars ($1,000,000) disease—each employee. Evidence of qualified self-insured status may be substituted for the worker's compensation requirements under this paragraph.

2. **Commercial general liability insurance** with minimum combined single limits of six hundred thousand dollars ($600,000) each occurrence and one million dollars ($1,000,000) general aggregate. The policy shall be applicable to all premises and operations. The policy shall include coverage for bodily injury broad form property damage (including completed operations), personal injury (including coverage for contractual and employee acts), blanket contractual products, and completed operations. This policy shall contain a severability of interests provision.

3. **Professional liability insurance** with minimum limits of six hundred, thousand dollars ($600,000) each claim and one million dollars ($1,000,000) general aggregate.

4. **The policy required by paragraph 2., above, shall be endorsed to include the City and the City's officers, employees, and Contractors as additional insureds**. The policy required in Paragraphs 1 and 2 above shall be primary insurance, and any insurance carried by the City, its officers, its employees, or its Contractors shall be excess and not contributory insurance to that provided by Contractor. No additional insured endorsement to the policy required by paragraph 1., above, shall contain any exclusion for bodily injury or property damage arising from completed operations. Contractor shall be solely responsible for any deductible losses under any policy required above.

5. The certificate of insurance provided for the City shall be completed by Contractor's insurance agent as evidence that policies providing the required coverages, conditions, and minimum limits are in full force and effect, and shall be reviewed and approved by the City prior to commencement of the Agreement. No other form of certificate shall be used. The certificate shall identify this Agreement and shall provide that the coverages afforded under the policies shall not be cancelled, terminated, or materially changed until at least thirty (30) days prior written notice has been given to the City.

The completed certificate of insurance shall be sent to:

City of Black Hawk
P.O. Box 68
Black Hawk, Colorado 80422-0068
Attn: City Clerk

6. Failure on the part of Contractor to procure or maintain policies providing the required coverages, conditions, and minimum limits shall constitute a material breach of agreement upon which the City may immediately terminate this Agreement, or at its discretion, the City may procure or renew any such policy or any extended reporting period thereto and may pay any and all premiums in connection therewith, and all monies so paid by the City shall be repaid by Contractor to the City upon demand, or the City may offset the cost of the premiums against any monies due to Contractor from the City.

7. The City reserves the right to request and receive a certified copy of any policy and any endorsement thereto.

8. The parties hereto understand and agree that the City, its officers, and its employees, are relying on, and do not waive or intend to waive by any provision of this Agreement, the monetary limitations or any other rights, immunities, and protections provided by the Colorado Governmental Immunity Act, Colo. Rev. Stat. §24-10-114 et seq., 13 Colo. Rev. Stat., as from time to time amended, or otherwise available to the City, its officers, its employees, or agents.

X. NON-ASSIGNABILITY

Neither this Agreement, nor any of the rights or obligations of the parties hereto, shall be assigned by either party without the written consent of the other.

XI. TERMINATION

This Agreement shall terminate upon the City's providing Contractor with thirty (30) days advance written notice. In the event the Agreement is terminated by the City's issuance of said written notice of intent to terminate, the City shall pay Contractor for all work previously authorized and completed prior to the date of termination. If, however, Contractor has substantially or materially breached the standards and terms of this Agreement, the City shall have any remedy or right of set-off available at law and equity. If the Agreement is terminated for any reason other than cause prior to completion of the Project, any use of documents by the City thereafter shall be at the City's sole risk, unless otherwise consented to by Contractor.

XII. VENUE

This Agreement shall be governed by the laws of the State of Colorado, and any legal action concerning the provisions hereof shall be brought in the County of Gilpin, State of Colorado.

XIII. INDEPENDENT CONTRACTOR

Contractor is an independent contractor. Notwithstanding any provision appearing in this Agreement, all personnel assigned by Contractor to perform work under the terms of this Agreement shall be, and remain at all times, employees or agents of Contractor for all purposes. Contractor shall make no representation that it is the employee of the City for any purpose.

XIV. NO WAIVER

Delays in enforcement or the waiver of any one or more defaults or breaches of this Agreement by the City shall not constitute a waiver of any of the other terms or obligations of this Agreement.

XV. NOTICE

Any notice or communication between Contractor and the City which may be required, or which may be given, under the terms of this Agreement, shall be in writing and shall be deemed to have been sufficiently given when directly presented or sent pre-paid, first class United States Mail, addressed as follows:

The City:

City of Black Hawk
P.O. Box 68
Black Hawk, Colorado 80422-0068
Attn: Cynthia Linker
Community Planning & Development Director

The Contractor:

Vincent Harris, Vice President
Baseline Engineering Corporation
112 North Rubey Drive, Suite 210
Golden, Colorado 80403

XVI. ENTIRE AGREEMENT

This Agreement and the attached exhibits constitute the entire Agreement between Contractor and the City, superseding all prior oral or written communications. None of the provisions of this Agreement may be amended, modified, or changed, except as specified herein.

IN WITNESS WHEREOF, the parties hereto each herewith subscribe the same in duplicate.

CITY OF BLACK HAWK, COLORADO

By: _____
David D. Spellman, Mayor

ATTEST:

_____
Melissa A. Greiner, CMC
City Clerk

APPROVED AS TO FORM:

_____
Corey Y. Hoffmann, City Attorney

Baseline Engineering Corporation

By: _____
Vincent Harris

Its: **Vice President**

STATE OF COLORADO)
) ss.
COUNTY OF **JEFFERSON**)

The foregoing instrument was subscribed, sworn to, and acknowledged before me this 29th day of December, 20 20, by **Vincent Harris as the Vice President of Baseline Engineering Corporation**

.

My commission expires: MY COMMISSION EXPIRES FEBRUARY 7, 2023

(S E A L)

TIFFANY R LOVE
NOTARY PUBLIC
STATE OF COLORADO
NOTARY ID 20074005522
MY COMMISSION EXPIRES FEBRUARY 7, 2023

_____
Notary Public

PROSPECTIVE CONTRACTOR'S CERTIFICATE REGARDING EMPLOYING OR CONTRACTING WITH AN ILLEGAL ALIEN

FROM: **Vincent Harris, Vice President**
Baseline Engineering Corporation

TO: City of Black Hawk
P.O. Box 68
Black Hawk, Colorado 80422-0068

Project Name:
On-Call Consulting Services on Various Planning, Land Use and Development Projects

Bid Number: **N/A** Project Number: **N/A**

As a prospective Contractor for the above-identified bid, I (we) do hereby certify that, as of the date of this certification, I (we) do not knowingly employ or contract with an illegal alien who will perform work under the Agreement and that I (we) will confirm the employment eligibility of all employees who are newly hired for employment to perform work under the Agreement through participation in either the E-Verify Program administered by the United States Department of Homeland Security and Social Security Administration or the Department Program administered by the Colorado Department of Labor and Employment.

Executed this 29th day of DECEMBER, 2020

Prospective Contractor: **Baseline Engineering Corporation**

By: _____
Vincent Harris

Title: **Vice President**

NO EMPLOYEE AFFIDAVIT

This Page Not Applicable

1. Check and complete one:

☐ I, _____, am a sole proprietor doing business as _____. I do not currently employ any individuals. Should I employ any individuals during the term of my Agreement with the City, I certify that I will comply with the lawful presence verification requirements outlined in that Agreement.

OR

☐ I, _____, am an owner/member/shareholder of _____, a _____[specify type of entity-*i.e.*, corporation, limited liability company], that does not currently employ any individuals. Should I employ any individuals during the term of my Agreement with the City, I certify that I will comply with the lawful presence verification requirements outlined in that Agreement.

2. Check one.

☐ I, _____, am a United States citizen or legal permanent resident.

The City must verify this statement by reviewing one of the following items:

- *A valid Colorado Driver's license or a Colorado identification card*
- *A United States military card or a military dependent's identification card*
- *A United States Coast Guard Merchant Mariner card*
- *A Native American tribal document or*
- *In the case of a resident of another state, the driver's license or state-issued identification card from the state of residence, if that state requires the applicant to prove lawful presence prior to the issuance of the identification card*
- *Any other documents or combination of documents listed in the City's "Acceptable Documents for Lawful Presence Verification" chart that prove both the contractor's citizenship/lawful presence and identity.*

OR

☐ I am otherwise lawfully present in the United States pursuant to federal law.

Contractor must verify this statement through the federal systematic alien verification of entitlement program, the "SAVE" program, and provide such verification to the City.

_____ _____

Signature Date

DEPARTMENT PROGRAM AFFIDAVIT

(To be completed if Contractor participates in the Department of Labor Lawful Presence Verification Program)

I, **Baseline Engineering Corporation**, as a public contractor under contract with the City of Black Hawk (the "City"), hereby affirm that:

1. I have examined or will examine the legal work status of all employees who are newly hired for employment to perform work under this public contract for services ("Contract") with the Town within twenty (20) days after such hiring date;

2. I have retained or will retain file copies of all documents required by 8 U.S.C. § 1324a, which verify the employment eligibility and identity of newly hired employees who perform work under the Agreement; and

3. I have not and will not alter or falsify the identification documents for my newly hired employees who perform work under the Agreement.

Contractor Signature

Vincent Harris, Vice President
Baseline Engineering Corp.

12/29/20
Date

STATE OF COLORADO)
) ss.
COUNTY OF **JEFFERSON**)

The foregoing instrument was subscribed, sworn to, and acknowledged before me this 29th day of December, 20 20, by **Vincent Harris as the Vice President of Baseline Engineering Corporation**

.

My commission expires: MY COMMISSION EXPIRES FEBRUARY 7, 2023

(S E A L)

TIFFANY R LOVE
NOTARY PUBLIC
STATE OF COLORADO
NOTARY ID 20074005522
MY COMMISSION EXPIRES FEBRUARY 7, 2023

Tiffany R. Love
Notary Public

ACCEPTABLE DOCUMENTS FOR LAWFUL PRESENCE VERIFICATION

Documents that Serve to Prove Citizenship/Lawful Presence and Identification:

- Colorado Driver's License or Identification Card
- Out of State drivers license from: AL, AZ, AR, CA, CT, DE, DC, FL, GA, ID, IN, IA, KS, KY, LA, ME, MN, MS, MO, MT, NV, NH, NJ, NY, ND, OH, OK, PA, RI, SC, SD, VA, WV, WY
- A United States Military Card of a Military Dependent's Identification Card
- A United States Coast Guard or Merchant Mariner Card
- A Native American Tribal Document
- Certificate of Naturalization with Photograph
- Certificate of U.S. Citizenship with Photograph
- U.S. Passport (less than 5 years old)
- Northern Mariana Identification Card with Photograph

OR

Documents that Only Serve to Prove Citizenship/Lawful Presence:

- U.S. Birth Certificate
- Certification of Report of Birth from Department of State
- Report of Birth Abroad of a U.S. Citizen
- U.S. Citizen Identification Card
- Final Adoption Decree
- Evidence of U.S. Civil Service Employment before June 1, 1976
- Statement Provided by U.S. Consular Officer Certifying Citizenship
- Religious Records Recorded in the 50 states, D.C., or a U.S. Territory Showing Birth Date or Child's Age and Location of Birth in U.S.
- Early School Records
- Census Records
- Other Documents that Establish a U.S. Place of Birth or in Some Way Indicates U.S. Citizenship

AND

Documents that Serve to Prove Identification:

- A Driver's License or Identification Card Regardless of the State of Issuance
- School Identification Card with Photograph
- Identification Card Issued by Federal, State or Local Government
- A Driver's License Issued by a Canadian Government Authority

EXHIBIT A

SCOPE OF SERVICES - 2021

Provide a sustainable approach to all planning and land development assignments and projects. Supplement City staff time, complement City staff expertise, provide an independent perspective, and ensure credibility while administering, managing and overseeing coordination obligations for all phases related to community planning and development projects for the City of Black Hawk.

Services and responsibilities may include, but not necessarily be limited to, the following:

1. Advise the CP&D Director on planning-related matters and workflow process and procedure;
2. Participate in professional planning activities:
    a. Pre-Application Meetings
    b. Review of Land-Use Applications
    c. Referral Agency Coordination
    d. Preparation of Staff Reports
    e. Illustration Design and Mapping
    f. Site Visits
    g. Submittal Requirements, Checklists and Procedures
    h. Address Changes
    i. Agreements
        - Boundary Line
        - License
        - Subdivision
    j. Annexations/Deannexations
    k. Board of Appeals
    l. Certificate of Architectural Compatibility
    m. Certificate of Occupancy
    n. Change of Use
    o. City Council Planning Calendar
    p. Comprehensive Plan
    q. Design Standards – Commercial
    r. Easements
        - Air Space
        - Roadway
        - Temporary Construction Easements
    s. FEMA Elevation Certificate
    t. Nuisance Abatement
    u. Permits
        - Blasting
        - Building
        - Excavation/Grading
        - Flood Plain Development
        - Sign
        - Special Use
        - Temporary Use
    v. Planned Unit Development

w. Plats
    - Subdivision plat (Final Plat and Preliminary Plat)
    - Minor Plat
    - Annexation Plat

x. Signs
    - Comprehensive Sign Plan
    - Standard Sign Plan

y. Site Development Plan
z. Vacations
aa. Variances
bb. Zoning/Rezoning

3. Review proposals for development to ensure regulations and generally accepted planning practice is followed. Monitor and ensure compliance with local, state and federal laws.
4. Oversee specialized planning functions such as large-scale new development proposals.
5. Perform application and case review to include report preparation and presentation.
6. Perform research.
7. Attend, participate, and perform post administrative actions subsequent to Development Review Committee and City Council meetings.
8. Meeting Attendance as required.

EXHIBIT A-1

SCHEDULE OF CHARGES – 2021
BASELINE ENGINEERING CORPORATION

Title	Reg Rate	City Rate
Planning Director	$165	$135
Planning Manager	$135	$125
Project Manager	$125	$115
Senior Planner	$115	$100
Landscape Architect	$115	$100
Principle Planner	$105	$ 95
Associate Planner	$100	$ 90
CAD Technician	$ 90	$ 80
Planning Technician	$ 80	$ 65

CERTIFICATE OF INSURANCE

Policy Number:

Date Entered: 05/19/2020

CERTIFICATE OF LIABILITY INSURANCE

DATE (MM/DD/YYYY) 5/19/2020

THIS CERTIFICATE IS ISSUED AS A MATTER OF INFORMATION ONLY AND CONFERS NO RIGHTS UPON THE CERTIFICATE HOLDER. THIS CERTIFICATE DOES NOT AFFIRMATIVELY OR NEGATIVELY AMEND, EXTEND OR ALTER THE COVERAGE AFFORDED BY THE POLICIES BELOW. THIS CERTIFICATE OF INSURANCE DOES NOT CONSTITUTE A CONTRACT BETWEEN THE ISSUING INSURER(S), AUTHORIZED REPRESENTATIVE OR PRODUCER, AND THE CERTIFICATE HOLDER.

IMPORTANT: If the certificate holder is an ADDITIONAL INSURED, the policy(ies) must have ADDITIONAL INSURED provisions or be endorsed. If SUBROGATION IS WAIVED, subject to the terms and conditions of the policy, certain policies may require an endorsement. A statement on this certificate does not confer rights to the certificate holder in lieu of such endorsement(s).

PRODUCER RISKPRO Insurance Agency, LLC 901 Waterfall Way, Suite 407 Richardson, TX 75080	CONTACT NAME: PHONE (A/C, No, Ext): ( ) - FAX (A/C, No): ( ) - E-MAIL ADDRESS:	
	INSURER(S) AFFORDING COVERAGE	NAIC #
	INSURER A: Travelers Indemnity Co of America	25666
INSURED Baseline Engineering Corporation 112 N Rubey Drive, Suite 210 Golden, CO 80403	INSURER B: Charter Oak Fire Insurance Company	25615
	INSURER C: Travelers Property Casualty Co. of Amer.	25674
	INSURER D: QBE Insurance Corporation	39217
	INSURER E:	
	INSURER F:	

COVERAGES **CERTIFICATE NUMBER:** **REVISION NUMBER:**

THIS IS TO CERTIFY THAT THE POLICIES OF INSURANCE LISTED BELOW HAVE BEEN ISSUED TO THE INSURED NAMED ABOVE FOR THE POLICY PERIOD INDICATED. NOTWITHSTANDING ANY REQUIREMENT, TERM OR CONDITION OF ANY CONTRACT OR OTHER DOCUMENT WITH RESPECT TO WHICH THIS CERTIFICATE MAY BE ISSUED OR MAY PERTAIN, THE INSURANCE AFFORDED BY THE POLICIES DESCRIBED HEREIN IS SUBJECT TO ALL THE TERMS, EXCLUSIONS AND CONDITIONS OF SUCH POLICIES. LIMITS SHOWN MAY HAVE BEEN REDUCED BY PAID CLAIMS.

INSR LTR	TYPE OF INSURANCE	ADDL INSD	SUBR WVD	POLICY NUMBER	POLICY EFF (MM/DD/YYYY)	POLICY EXP (MM/DD/YYYY)	LIMITS	
A	[X] COMMERCIAL GENERAL LIABILITY [ ] CLAIMS-MADE [X] OCCUR Contractual Liability GEN'L AGGREGATE LIMIT APPLIES PER: [ ] POLICY [X] PRO-JECT [ ] LOC OTHER:			680-1J16755020-47	5/23/2020	5/23/2021	EACH OCCURRENCE DAMAGE TO RENTED PREMISES (Ea occurrence) MED EXP (Any one person) PERSONAL & ADV INJURY GENERAL AGGREGATE PRODUCTS - COMP/OP AGG 	$ 1,000,000 $ 1,000,000 $ 5,000 $ 1,000,000 $ 2,000,000 $ 2,000,000 $
B	AUTOMOBILE LIABILITY [X] ANY AUTO [X] OWNED AUTOS ONLY [X] HIRED AUTOS ONLY [ ] SCHEDULED AUTOS [X] NON-OWNED AUTOS ONLY			BA-7F99761320-GRP	5/23/2020	5/23/2021	COMBINED SINGLE LIMIT (Ea accident) BODILY INJURY (Per person) BODILY INJURY (Per accident) PROPERTY DAMAGE (Per accident) 	$ 1,000,000 $ $ $ $
	[ ] UMBRELLA LIAB [ ] OCCUR [ ] EXCESS LIAB [ ] CLAIMS-MADE [ ] DED [ ] RETENTION $						EACH OCCURRENCE AGGREGATE 	$ $ $
C	WORKERS COMPENSATION AND EMPLOYERS' LIABILITY ANY PROPRIETOR/PARTNER/EXECUTIVE OFFICER/MEMBER EXCLUDED? (Mandatory in NH) [ ] Y/N If yes, describe under DESCRIPTION OF OPERATIONS below	N/A		UB-5K26750920-47-G	5/23/2020	5/23/2021	[X] PER STATUTE [ ] OTH-ER E.L. EACH ACCIDENT E.L. DISEASE - EA EMPLOYEE E.L. DISEASE - POLICY LIMIT	 $ 1,000,000 $ 1,000,000 $ 1,000,000
D	Professional Liability			ANE41140-01	5/23/2020	5/23/2021	Each Claim Aggregate	$2,000,000 $2,000,000

DESCRIPTION OF OPERATIONS / LOCATIONS / VEHICLES (ACORD 101, Additional Remarks Schedule, may be attached if more space is required)

Coverage is subject to all policy terms, conditions, exclusions and endorsements.

City of Black Hawk, its officers and employees as additional insureds on general liability as required by written contract but only as respects operations of the named insured.

CERTIFICATE HOLDER

City of Black Hawk
P.O. Box 68
211 Church Street
Black Hawk CO 80422

CANCELLATION

SHOULD ANY OF THE ABOVE DESCRIBED POLICIES BE CANCELLED BEFORE THE EXPIRATION DATE THEREOF, NOTICE WILL BE DELIVERED IN ACCORDANCE WITH THE POLICY PROVISIONS.

AUTHORIZED REPRESENTATIVE

© 1988-2015 ACORD CORPORATION. All rights reserved.

The ACORD name and logo are registered marks of ACORD

CITY OF BLACK HAWK, COLORADO

AGREEMENT FOR PROFESSIONAL SERVICES
GONZALES CUSTOM PAINTING, INC.

RESOLUTION 4-2021
JANUARY 13, 2021

AGREEMENT FOR PROFESSIONAL SERVICES

THIS AGREEMENT is made and entered into this **1st day of January, 2021** by and between the **CITY OF BLACK HAWK**, State of Colorado, a Colorado municipal corporation (hereinafter referred to as the "City") and **GONZALES CUSTOM PAINTING, INC** hereinafter referred to as "Contractor").

RECITALS:

A. The City requires a **paint contractor that specializes in comprehensive painting services for both interior and exterior work providing all supervision, labor, equipment, tools, supplies, and materials that encompasses both residential and municipal projects on an "on-call" basis** (the "Project").

B. Contractor has held itself out to the City as having the requisite expertise and experience to perform the required work for the Project.

NOW, THEREFORE, it is hereby agreed for the consideration hereinafter set forth, that Contractor shall provide to the City **on-call consulting services to assist the City with providing interior and exterior painting services for residential and municipal projects within the City of Black Hawk**.

I. SCOPE OF SERVICES

Contractor shall complete the scope of services as described in **Exhibit A** attached hereto and incorporated herein by this reference. Contractor shall furnish all labor and materials to perform the work and services required for the complete and prompt execution and performance of all duties, obligations, and responsibilities for the Project.

II. THE CITY'S OBLIGATIONS/CONFIDENTIALITY

The City shall provide Contractor with reports and such other data as may be available to the City and reasonably required by Contractor to perform hereunder. No project information shall be disclosed by Contractor to third parties without the prior written consent of the City or pursuant to a lawful court order directing such disclosure. All documents provided by the City to Contractor shall be returned to the City. Contractor is authorized by the City to retain copies of such data and materials at Contractor's expense.

III. OWNERSHIP OF WORK PRODUCT

The City acknowledges that Contractor's documents produced under this Agreement are instruments of professional services. Nevertheless, upon payment to Contractor pursuant to this Agreement, all work, data, drawings, designs, plans, reports, computer programs (non-proprietary), computer input and output, analyses, tests, maps, surveys, or any other materials developed for this Project are, and shall be, the sole and exclusive property of the City. However, any reuse of the documents by the City without prior written authorization by Contractor other than for the specific intended purpose of this Agreement will be at the City's sole risk. Contractor will provide the City with a ten (10) day written notice prior to disposal of Project documents it has retained, during which time the City may take physical possession of same at the storage site.

IV. COMPENSATION

A. Compensation shall not exceed **amounts as described in Exhibit A-1 for the work described in Exhibit A**. Payment shall be made in accordance with the schedule of charges in **Exhibit A-1**. Invoices will be itemized and include hourly breakdown for all personnel and other charges.

B. Contractor may submit monthly or periodic statements requesting payment. Such request shall be based upon the amount and value of the work and services performed by Contractor under this Agreement except as otherwise supplemented or accompanied by such supporting data as may be required by the City.

1. All invoices, including Contractor's verified payment request, shall be submitted by Contractor to the City no later than the twenty-fourth (24th) day of each month for payment pursuant to the terms of this Agreement. In the event Contractor fails to submit any invoice on or before the twenty-fourth (24th) day of any given month, Contractor defers its right to payment pursuant to said late invoice until the twenty-fourth (24th) day of the following month.

2. Progress payments may be claimed on a monthly basis for reimbursable costs actually incurred to date as supported by detailed statements, including hourly breakdowns for all personnel and other charges. The amounts of all such monthly payments shall be paid within thirty (30) days after the timely receipt of invoice as provided by this Agreement.

C. The City has the right to ask for clarification on any Contractor invoice after receipt of the invoice by the City.

D. In the event payment for services rendered has not been made within forty-five (45) days from the receipt of the invoice for any uncontested billing, interest will accrue at the legal rate of interest. In the event payment has not been made within ninety (90) days from the receipt of the invoice for any uncontested billing, Contractor may, after giving seven (7) days written notice and without penalty or liability of any nature, suspend all work on all authorized services specified herein. In the event payment in full is not received within thirty (30) days of giving the seven (7) days written notice, Contractor may terminate this Agreement. Upon receipt of payment in full for services rendered, Contractor will continue with all authorized services.

E. Final payment shall be made within sixty (60) calendar days after all data and reports (which are suitable for reproduction and distribution by the City) required by this Agreement have been turned over to and approved by the City and upon receipt by the City of Contractor's certification that services required herein by Contractor have been fully completed in accordance with this Agreement and all data and reports for the Project.

V. COMMENCEMENT AND COMPLETION OF WORK

Contractor shall commence work upon the execution of this Agreement. This Agreement shall be completed by **January 12, 2022.**

VI. PROFESSIONAL RESPONSIBILITY

A. Contractor hereby represents that it is qualified to assume the responsibilities and render the services described herein and has all requisite corporate authority and professional licenses in good standing, required by law.

B. The work performed by Contractor shall be in accordance with generally accepted professional practices and the level of competency presently maintained by other practicing professional firms in the same or similar type of work in the applicable community.

C. Contractor shall be responsible for the professional quality, technical accuracy, timely completion, and coordination of all designs, drawings, specifications, reports, and other services furnished by Contractor under this Agreement. Contractor shall, without additional compensation, correct or resolve any errors or deficiencies in its designs, drawings, specifications, reports, and other services which fall below the standard of professional practice.

D. Approval by the City of drawings, designs, specifications, reports, and incidental work or materials furnished hereunder shall not in any way relieve Contractor of responsibility for technical adequacy of the work. Neither the City's review, approval, or acceptance of, nor payment for, any of the services shall be construed to operate as a waiver of any rights under this Agreement, and Contractor shall be and remain liable in accordance with applicable performance of any of the services furnished under this Agreement.

E. The rights and remedies of the City provided for under this Agreement are in addition to any other rights and remedies provided by law.

VII. COMPLIANCE WITH LAW

A. The work and services to be performed by Contractor hereunder shall be done in compliance with applicable laws, ordinances, rules, and regulations.

B. Illegal Aliens.

1. Certification. By entering into this Agreement, Contractor hereby certifies that, at the time of this certification, it does not knowingly employ or contract with an illegal alien who will perform work under the Agreement and that Contractor will participate in either the E-Verify Program administered by the United States Department of Homeland Security and Social Security Administration or the Department Program administered by the Colorado Department of Labor and Employment in order to confirm the employment eligibility of all employees who are newly hired for employment to perform work under the Agreement.

2. Prohibited Acts. Contractor shall not:

a. Knowingly employ or contract with an illegal alien to perform work under this Agreement; or

b. Enter into a contract with a subcontractor that fails to certify to Contractor that the subcontractor shall not knowingly employ or contract with an illegal alien to perform work under this Agreement.

3. Verification.

a. Contractor has confirmed the employment eligibility of all employees who are newly hired for employment to perform work under this Agreement through participation in either the E-Verify Program or the Department Program.

b. Contractor shall not use the E-Verify Program or the Department Program procedures to undertake pre-employment screening of job applicants while this Agreement is being performed.

c. If Contractor obtains actual knowledge that a subcontractor performing work under this Agreement knowingly employs or contracts with an illegal alien who is performing work under the Agreement, Contractor shall:

i. Notify the subcontractor and the City within three (3) days that Contractor has actual knowledge that the subcontractor is employing or contracting with an illegal alien who is performing work under the Agreement; and

ii. Terminate the subcontract with the subcontractor if within three (3) days of receiving the notice required pursuant to subparagraph (i) hereof, the subcontractor does not stop employing or contracting with the illegal alien who is performing work under the Agreement; except that Contractor shall not terminate the contract with the subcontractor if during such three (3) days the subcontractor provides information to establish that the subcontractor has not knowingly employed or contracted with an illegal alien who is performing work under the Agreement.

4. Duty to Comply with Investigations. Contractor shall comply with any reasonable request by the Colorado Department of Labor and Employment made in the course of an investigation conducted pursuant to C.R.S. § 8-17.5-102(5)(a) to ensure that Contractor is complying with the terms of this Agreement.

5. If Contractor does not currently employ any employees, Contractor shall sign the No Employee Affidavit attached hereto.

6. If Contractor wishes to verify the lawful presence of newly hired employees who perform work under the Agreement via the Department Program, Contractor shall sign the Department Program Affidavit attached hereto.

VIII. INDEMNIFICATION

A. INDEMNIFICATION – GENERAL: The City cannot and by this Agreement does not agree to indemnify, hold harmless, exonerate or assume the defense of the Contractor or any other person or entity whatsoever, for any purpose whatsoever. Provided that the claims, demands, suits, actions or proceedings of any kind are not the result of professional negligence, the Contractor, to the fullest extent permitted by law, shall defend, indemnify and hold harmless the City, its Council members, officials, officers, directors, agents and employees from any and all claims, demands, suits, actions or proceedings of any kind or nature whatsoever, including worker's compensation claims, in any way resulting from or arising from the services rendered by Contractor, its employees, agents or sub-contractors, or others for whom the Contractor is legally liable, under this Agreement; provided, however, that the Contractor need not indemnify or save harmless the City, its Council members, its officers, agents and employees from damages resulting from the negligence of the Council members, officials, officers, directors, agents and employees.

B. INDEMNIFICATION FOR PROFESSIONAL NEGLIGENCE: The Contractor shall, to the fullest extent permitted by law, defend, indemnify and hold harmless the City, its Council members, and any of its officials, officers, directors, and employees from and against damages, liability, losses, costs and expenses, including reasonable attorney's fees, but only to the extent caused by or arising out of the negligent acts, errors or omissions of the Contractor, its employees, agents or subcontractors, or others for whom the Contractor is legally liable, in the performance of professional services under this Agreement. The Contractor is not obligated under this subparagraph VIII.B. to indemnify the City for the negligent acts of the City, its Council members, or any of its officials, officers, directors, agents and employees.

C. INDEMNIFICATION – COSTS: Contractor shall, to the fullest extent permitted by law, defend, investigate, handle, respond to, and provide defense for and defend against, any such liability, claims or demands at the sole expense of Contractor or, at the option of the City, agrees to pay the City or reimburse the City for the defense costs incurred by the City in connection with any such liability, claims or demands. Contractor shall, to the fullest extent permitted by law, defend and bear all other costs and expenses related thereto, including court costs and attorney fees, whether or not any such liability, claims or demands alleged are groundless, false or fraudulent. If it is determined by the final judgment of a court of any competent jurisdiction that such injury, loss or damage was caused in whole or in part by the act, omission or other fault of the City, its Council members, officials, officers, directors, agents and employees, the City shall reimburse Contractor for the portion of the judgment attributable to such act, omission or other fault of the City, its Council members, officials, officers, directors, agents and employees.

IX. INSURANCE

A. The Contractor agrees to obtain and maintain during the life of the Agreement, a policy or policies of insurance against all liability, claims, demands and other obligations assumed by the Contractor pursuant to Section VIII above. Such insurance shall be in addition to any other insurance requirements imposed by the Agreement or by law. The Contractor shall not be relieved of any liability, claims, demands, or other obligations assumed pursuant to Section VIII above, by reason of its failure to obtain and maintain during the life of the Agreement insurance in sufficient amounts, durations, or types.

B. Contractor shall obtain and maintain during the life of the Agreement, and shall cause any subcontractor to obtain and maintain during the life of the Agreement, the minimum insurance coverages listed below. Such coverages shall be obtained and maintained with forms and insurers acceptable to the City. All coverages shall be continuously maintained to cover all liability, claims, demands and other obligations assumed by the Contractor pursuant to Section VIII above. In the case of any claims-made policy, the necessary retroactive dates and extended reporting periods shall be procured to maintain such continuous coverage.

1. **Worker's Compensation Insurance** to cover obligations imposed by applicable law for any employee engaged in the performance of the work under the Agreement, and Employers Liability Insurance with minimum limits of six hundred thousand dollars ($600,000) each incident, one million dollars ($1,000,000) disease—policy limit, and one million dollars ($1,000,000) disease—each employee. Evidence of qualified self-insured status may be substituted for the worker's compensation requirements under this paragraph.

2. **Commercial general liability insurance** with minimum combined single limits of six hundred thousand dollars ($600,000) each occurrence and one million dollars ($1,000,000) general aggregate. The policy shall be applicable to all premises and operations. The policy shall include coverage for bodily injury broad form property damage (including completed operations), personal injury (including coverage for contractual and employee acts), blanket contractual products, and completed operations. This policy shall contain a severability of interests provision.

3. **Professional liability insurance** with minimum limits of six hundred, thousand dollars ($600,000) each claim and one million dollars ($1,000,000) general aggregate.

4. **The policy required by paragraph 2., above, shall be endorsed to include the City and the City's officers, employees, and Contractors as additional insureds**. The policy required in Paragraphs 1 and 2 above shall be primary insurance, and any insurance carried by the City, its officers, its employees, or its Contractors shall be excess and not contributory insurance to that provided by Contractor. No additional insured endorsement to the policy required by paragraph 1., above, shall contain any exclusion for bodily injury or property damage arising from completed operations. Contractor shall be solely responsible for any deductible losses under any policy required above.

5. The certificate of insurance provided for the City shall be completed by Contractor's insurance agent as evidence that policies providing the required coverages, conditions, and minimum limits are in full force and effect, and shall be reviewed and approved by the City prior to commencement of the Agreement. No other form of certificate shall be used. The certificate shall identify this Agreement and shall provide that the coverages afforded under the policies shall not be cancelled, terminated, or materially changed until at least thirty (30) days prior written notice has been given to the City.

The completed certificate of insurance shall be sent to:

City of Black Hawk
P.O. Box 68
Black Hawk, Colorado 80422-0068
Attn: City Clerk

6. Failure on the part of Contractor to procure or maintain policies providing the required coverages, conditions, and minimum limits shall constitute a material breach of agreement upon which the City may immediately terminate this Agreement, or at its discretion, the City may procure or renew any such policy or any extended reporting period thereto and may pay any and all premiums in connection therewith, and all monies so paid by the City shall be repaid by Contractor to the City upon demand, or the City may offset the cost of the premiums against any monies due to Contractor from the City.

7. The City reserves the right to request and receive a certified copy of any policy and any endorsement thereto.

8. The parties hereto understand and agree that the City, its officers, and its employees, are relying on, and do not waive or intend to waive by any provision of this Agreement, the monetary limitations or any other rights, immunities, and protections provided by the Colorado Governmental Immunity Act, Colo. Rev. Stat. §24-10-114 et seq., 13 Colo. Rev. Stat., as from time to time amended, or otherwise available to the City, its officers, its employees, or agents.

X. NON-ASSIGNABILITY

Neither this Agreement, nor any of the rights or obligations of the parties hereto, shall be assigned by either party without the written consent of the other.

XI. TERMINATION

This Agreement shall terminate upon the City's providing Contractor with thirty (30) days advance written notice. In the event the Agreement is terminated by the City's issuance of said written notice of intent to terminate, the City shall pay Contractor for all work previously authorized and completed prior to the date of termination. If, however, Contractor has substantially or materially breached the standards and terms of this Agreement, the City shall have any remedy or right of set-off available at law and equity. If the Agreement is terminated for any reason other than cause prior to completion of the Project, any use of documents by the City thereafter shall be at the City's sole risk, unless otherwise consented to by Contractor.

XII. VENUE

This Agreement shall be governed by the laws of the State of Colorado, and any legal action concerning the provisions hereof shall be brought in the County of Gilpin, State of Colorado.

XIII. INDEPENDENT CONTRACTOR

Contractor is an independent contractor. Notwithstanding any provision appearing in this Agreement, all personnel assigned by Contractor to perform work under the terms of this Agreement shall be, and remain at all times, employees or agents of Contractor for all purposes. Contractor shall make no representation that it is the employee of the City for any purpose.

XIV. NO WAIVER

Delays in enforcement or the waiver of any one or more defaults or breaches of this Agreement by the City shall not constitute a waiver of any of the other terms or obligations of this Agreement.

XV. NOTICE

Any notice or communication between Contractor and the City which may be required, or which may be given, under the terms of this Agreement, shall be in writing and shall be deemed to have been sufficiently given when directly presented or sent pre-paid, first class United States Mail, addressed as follows:

The City:

City of Black Hawk
P.O. Box 68
Black Hawk, Colorado 80422-0068
Attn: Cynthia Linker
Community Planning & Development Director

The Contractor:

Dawn Wood, Office Manager
Gonzales Custom Painting, Inc.
6820 Orion Court
Arvada, Colorado 80007

XVI. ENTIRE AGREEMENT

This Agreement and the attached exhibits constitute the entire Agreement between Contractor and the City, superseding all prior oral or written communications. None of the provisions of this Agreement may be amended, modified, or changed, except as specified herein.

IN WITNESS WHEREOF, the parties hereto each herewith subscribe the same in duplicate.

CITY OF BLACK HAWK, COLORADO

By: _____
David D. Spellman, Mayor

ATTEST:

_____
Melissa A. Greiner, CMC
City Clerk

APPROVED AS TO FORM:

_____
Corey Y. Hoffmann, City Attorney

Gonzales Custom Painting, Inc.

By: Dawn Wood
Its: Office Manager

STATE OF COLORADO)
) ss.
COUNTY OF ~~BOULDER~~ Jefferson me)

The foregoing instrument was subscribed, sworn to, and acknowledged before me this 28th day of December, 20 20, by **Dawn Wood as the Office Manager of Gonzales Custom Painting, Inc.**

My commission expires: 04/30/2023

(S E A L)

MATTHEW ESHACK
NOTARY PUBLIC
STATE OF COLORADO
NOTARY ID 20194016504
MY COMMISSION EXPIRES APRIL 30, 2023

Notary Public

PROSPECTIVE CONTRACTOR'S CERTIFICATE REGARDING EMPLOYING OR CONTRACTING WITH AN ILLEGAL ALIEN

FROM: **Dawn Wood, Office Manager**
Gonzales Custom Painting, Inc.

TO: **City of Black Hawk**
P.O. Box 68
Black Hawk, Colorado 80422-0068

Project Name:
On-Call Professional Services Agreement – Interior / Exterior Painting

Bid Number: N/A **Project Number: N/A**

As a prospective Contractor for the above-identified bid, I (we) do hereby certify that, as of the date of this certification, I (we) do not knowingly employ or contract with an illegal alien who will perform work under the Agreement and that I (we) will confirm the employment eligibility of all employees who are newly hired for employment to perform work under the Agreement through participation in either the E-Verify Program administered by the United States Department of Homeland Security and Social Security Administration or the Department Program administered by the Colorado Department of Labor and Employment.

Executed this 28 **day of** December, **20**20

Prospective Contractor: Gonzales Custom Painting, Inc.

By: _____
Dawn Wood

Title: Office Manager

NO EMPLOYEE AFFIDAVIT

This Page Not Applicable

1. Check and complete one:

☐ I, _____, am a sole proprietor doing business as _____. I do not currently employ any individuals. Should I employ any individuals during the term of my Agreement with the City, I certify that I will comply with the lawful presence verification requirements outlined in that Agreement.

OR

☐ I, _____, am an owner/member/shareholder of _____, a _____[specify type of entity-*i.e.*, corporation, limited liability company], that does not currently employ any individuals. Should I employ any individuals during the term of my Agreement with the City, I certify that I will comply with the lawful presence verification requirements outlined in that Agreement.

2. Check one.

☐ I, _____, am a United States citizen or legal permanent resident.

The City must verify this statement by reviewing one of the following items:

- *A valid Colorado Driver's license or a Colorado identification card*
- *A United States military card or a military dependent's identification card*
- *A United States Coast Guard Merchant Mariner card*
- *A Native American tribal document or*
- *In the case of a resident of another state, the driver's license or state-issued identification card from the state of residence, if that state requires the applicant to prove lawful presence prior to the issuance of the identification card*
- *Any other documents or combination of documents listed in the City's "Acceptable Documents for Lawful Presence Verification" chart that prove both the contractor's citizenship/lawful presence and identity.*

OR

☐ I am otherwise lawfully present in the United States pursuant to federal law.

Contractor must verify this statement through the federal systematic alien verification of entitlement program, the "SAVE" program, and provide such verification to the City.

_____ _____

Signature Date

DEPARTMENT PROGRAM AFFIDAVIT

(To be completed if Contractor participates in the Department of Labor Lawful Presence Verification Program)

I, **Dawn Wood,** as a public contractor under contract with the City of Black Hawk (the "City"), hereby affirm that:

1. I have examined or will examine the legal work status of all employees who are newly hired for employment to perform work under this public contract for services ("Contract") with the Town within twenty (20) days after such hiring date;

2. I have retained or will retain file copies of all documents required by 8 U.S.C. § 1324a, which verify the employment eligibility and identity of newly hired employees who perform work under the Agreement; and

3. I have not and will not alter or falsify the identification documents for my newly hired employees who perform work under the Agreement.

Contractor Signature

12/28/2020
Date

Dawn Wood
Gonzales Custom Painting, Inc.

STATE OF COLORADO)
) ss.
COUNTY OF Jefferson)

The foregoing instrument was subscribed, sworn to, and acknowledged before me this 28th day of December, 2020, by **Dawn Wood as the Office Manager of Gonzales Custom Painting, Inc.**

My commission expires: 04/30/2023

(S E A L)

MATTHEW ESHACK
NOTARY PUBLIC
STATE OF COLORADO
NOTARY ID 20194016504
MY COMMISSION EXPIRES APRIL 30, 2023

Notary Public

ACCEPTABLE DOCUMENTS FOR LAWFUL PRESENCE VERIFICATION

Documents that Serve to Prove Citizenship/Lawful Presence and Identification:

- Colorado Driver's License or Identification Card
- Out of State drivers license from: AL, AZ, AR, CA, CT, DE, DC, FL, GA, ID, IN, IA, KS, KY, LA, ME, MN, MS, MO, MT, NV, NH, NJ, NY, ND, OH, OK, PA, RI, SC, SD, VA, WV, WY
- A United States Military Card of a Military Dependent's Identification Card
- A United States Coast Guard or Merchant Mariner Card
- A Native American Tribal Document
- Certificate of Naturalization with Photograph
- Certificate of U.S. Citizenship with Photograph
- U.S. Passport (less than 5 years old)
- Northern Mariana Identification Card with Photograph

OR

Documents that Only Serve to Prove Citizenship/Lawful Presence:

- U.S. Birth Certificate
- Certification of Report of Birth from Department of State
- Report of Birth Abroad of a U.S. Citizen
- U.S. Citizen Identification Card
- Final Adoption Decree
- Evidence of U.S. Civil Service Employment before June 1, 1976
- Statement Provided by U.S. Consular Officer Certifying Citizenship
- Religious Records Recorded in the 50 states, D.C., or a U.S. Territory Showing Birth Date or Child's Age and Location of Birth in U.S.
- Early School Records
- Census Records
- Other Documents that Establish a U.S. Place of Birth or in Some Way Indicates U.S. Citizenship

AND

Documents that Serve to Prove Identification:

- A Driver's License or Identification Card Regardless of the State of Issuance
- School Identification Card with Photograph
- Identification Card Issued by Federal, State or Local Government
- A Driver's License Issued by a Canadian Government Authority

EXHIBIT A

SCOPE OF WORK - 2021

The **City of Black Hawk** shall provide a **Scope of Work** to **Gonzales Custom Painting, Inc.** on a project-by-project basis.

Gonzales Custom Painting, Inc. shall provide a quote based on the attached **Schedule of Charges - Exhibit A-1** and **Scope of Work** provided by the **City of Black Hawk** on a project-by-project basis.

EXHIBIT A-1

SCHEDULE OF CHARGES – 2021
GONZALES CUSTOM PAINTING, INC.

Interior Walls	$ 2.00 square foot
Interior Ceilings	$ 1.96 square foot
Exterior Walls	$ 1.92 square foot
Railings	$ 1.25 linear foot
Door/Frames	$50.00 Each

CERTIFICATIONS
LEAD SAFETY FOR RENOVATION, REPAIR, AND PAINTING

Weecycle Environmental Consulting, Inc.
1208 Commerce Ct / Suite 5B / Lafayette, Colorado 80026
Phone: (303)413-0452 / Fax: (303)413-0710 / rrp@weecycle-env.com

Certificate of Attendance and Successful Completion

Lead Safety for Renovation, Repair, and Painting

Renovator Initial – English

Per 40 CFR Part 745.225

Monique Gonzales
3241 S Princess Cir
Broomfiled, CO 80020

Certification No: R-I-18362-19-03145

Course Date: October 23, 2019
Examination Date: October 23, 2019
Expiration Date: October 23, 2024

Signed: _____ Date: October 23, 2019

Weecycle Environmental Consulting, Inc.
1208 Commerce Ct / Suite 5B / Lafayette, Colorado 80026
Phone: (303)413-0452 / Fax: (303)413-0710 / rm@weecycle-env.com

Certificate of Attendance and Successful Completion

Lead Safety for Renovation, Repair, and Painting

Renovator Initial – English

Per 40 CFR Part 745.225

William Gonzales
2820 Orion Ct
Arvada, CO 80007

Certification No: R-I-[illegible]8362-19-03144

Course Date	October 23, 2019
Examination Date	October 23, 2019
Expiration Date	October 23, 2024

Signed _____ Date: October 23, 2019

INSURANCE CERTIFICATE

GONZCUS-01 DDALE

CERTIFICATE OF LIABILITY INSURANCE

DATE (MM/DD/YYYY) 12/3/2020

THIS CERTIFICATE IS ISSUED AS A MATTER OF INFORMATION ONLY AND CONFERS NO RIGHTS UPON THE CERTIFICATE HOLDER. THIS CERTIFICATE DOES NOT AFFIRMATIVELY OR NEGATIVELY AMEND, EXTEND OR ALTER THE COVERAGE AFFORDED BY THE POLICIES BELOW. THIS CERTIFICATE OF INSURANCE DOES NOT CONSTITUTE A CONTRACT BETWEEN THE ISSUING INSURER(S), AUTHORIZED REPRESENTATIVE OR PRODUCER, AND THE CERTIFICATE HOLDER.

IMPORTANT: If the certificate holder is an ADDITIONAL INSURED, the policy(ies) must have ADDITIONAL INSURED provisions or be endorsed. If SUBROGATION IS WAIVED, subject to the terms and conditions of the policy, certain policies may require an endorsement. A statement on this certificate does not confer rights to the certificate holder in lieu of such endorsement(s).

PRODUCER
Continental Insurance Agency Alliance
23 Inverness Way E
Unit 120
Englewood, CO 80112

CONTACT NAME:
PHONE (A/C, No, Ext): (303) 470-3233 FAX (A/C, No): (970) 945-6027
E-MAIL ADDRESS:

INSURER(S) AFFORDING COVERAGE NAIC #
INSURER A: The Hartford
INSURER B: Guard 20044
INSURER C:
INSURER D:
INSURER E:
INSURER F:

INSURED
Gonzales Custom Painting, Inc.
6820 Orion Ct.
Arvada, CO 80007

COVERAGES **CERTIFICATE NUMBER:** **REVISION NUMBER:**

THIS IS TO CERTIFY THAT THE POLICIES OF INSURANCE LISTED BELOW HAVE BEEN ISSUED TO THE INSURED NAMED ABOVE FOR THE POLICY PERIOD INDICATED. NOTWITHSTANDING ANY REQUIREMENT, TERM OR CONDITION OF ANY CONTRACT OR OTHER DOCUMENT WITH RESPECT TO WHICH THIS CERTIFICATE MAY BE ISSUED OR MAY PERTAIN, THE INSURANCE AFFORDED BY THE POLICIES DESCRIBED HEREIN IS SUBJECT TO ALL THE TERMS, EXCLUSIONS AND CONDITIONS OF SUCH POLICIES. LIMITS SHOWN MAY HAVE BEEN REDUCED BY PAID CLAIMS.

INSR LTR	TYPE OF INSURANCE	ADDL INSD	SUBR WVD	POLICY NUMBER	POLICY EFF (MM/DD/YYYY)	POLICY EXP (MM/DD/YYYY)	LIMITS	
A	X COMMERCIAL GENERAL LIABILITY						EACH OCCURRENCE $	1,000,000
	CLAIMS-MADE X OCCUR	X		34SBAVT2763	4/27/2020	4/27/2021	DAMAGE TO RENTED PREMISES (Ea occurrence) $	1,000,000
							MED EXP (Any one person) $	10,000
							PERSONAL & ADV INJURY $	1,000,000
	GEN'L AGGREGATE LIMIT APPLIES PER:						GENERAL AGGREGATE $	2,000,000
	POLICY X PRO-JECT LOC						PRODUCTS - COMP/OP AGG $	2,000,000
	OTHER						$	
B	AUTOMOBILE LIABILITY						COMBINED SINGLE LIMIT (Ea accident) $	1,000,000
	ANY AUTO		X	GOAU177115	4/27/2020	4/27/2021	BODILY INJURY (Per person) $	
	OWNED AUTOS ONLY X SCHEDULED AUTOS						BODILY INJURY (Per accident) $	
	X HIRED AUTOS ONLY X NON-OWNED AUTOS ONLY						PROPERTY DAMAGE (Per accident) $	
							$	
A	X UMBRELLA LIAB X OCCUR						EACH OCCURRENCE $	2,000,000
	EXCESS LIAB CLAIMS-MADE			34SBAVT2763	4/27/2020	4/27/2021	AGGREGATE $	2,000,000
	DED X RETENTION $ 10,000						$	
A	WORKERS COMPENSATION AND EMPLOYERS' LIABILITY	Y/N					X PER STATUTE OTH-ER	
	ANY PROPRIETOR/PARTNER/EXECUTIVE OFFICER/MEMBER EXCLUDED? (Mandatory in NH)	Y	N/A	34WECBY6191	4/27/2020	4/27/2021	E.L. EACH ACCIDENT $	1,000,000
	If yes, describe under DESCRIPTION OF OPERATIONS below						E.L. DISEASE - EA EMPLOYEE $	1,000,000
							E.L. DISEASE - POLICY LIMIT $	1,000,000

DESCRIPTION OF OPERATIONS / LOCATIONS / VEHICLES (ACORD 101, Additional Remarks Schedule, may be attached if more space is required)
The City of Black Hawk is added as an additional insured to this CGL policy per endorsement SS0008, and to the auto policy per endorsement BA 9904, attached.

CERTIFICATE HOLDER

City of Black Hawk
201 Selak Street
PO Box 68
Black Hawk, CO 80422

CANCELLATION

SHOULD ANY OF THE ABOVE DESCRIBED POLICIES BE CANCELLED BEFORE THE EXPIRATION DATE THEREOF, NOTICE WILL BE DELIVERED IN ACCORDANCE WITH THE POLICY PROVISIONS.

AUTHORIZED REPRESENTATIVE

ACORD 25 (2016/03) © 1988-2015 ACORD CORPORATION. All rights reserved.
The ACORD name and logo are registered marks of ACORD

CITY OF BLACK HAWK, COLORADO

AGREEMENT FOR PROFESSIONAL SERVICES
PINYON ENVIRONMENTAL, INC.

RESOLUTION 4-2021
JANUARY 13, 2021

AGREEMENT FOR PROFESSIONAL SERVICES

THIS AGREEMENT is made and entered into this **1st day of January, 2021** by and between the **CITY OF BLACK HAWK**, State of Colorado, a Colorado municipal corporation (hereinafter referred to as the "City") and **PINYON ENVIRONMENTAL, INC.** hereinafter referred to as "Contractor").

RECITALS:

A. The City requires **on-call historic preservation consulting and advising services** (the "Project").

B. Contractor has held itself out to the City as having the requisite expertise and experience to perform the required work for the Project.

NOW, THEREFORE, it is hereby agreed for the consideration hereinafter set forth, that Contractor shall provide to the City **on-call historic preservation consulting and advising services.**

I. SCOPE OF SERVICES

Contractor shall complete the scope of services as described in **Exhibit A** attached hereto and incorporated herein by this reference. Contractor shall furnish all labor and materials to perform the work and services required for the complete and prompt execution and performance of all duties, obligations, and responsibilities for the Project.

II. THE CITY'S OBLIGATIONS/CONFIDENTIALITY

The City shall provide Contractor with reports and such other data as may be available to the City and reasonably required by Contractor to perform hereunder. No project information shall be disclosed by Contractor to third parties without the prior written consent of the City or pursuant to a lawful court order directing such disclosure. All documents provided by the City to Contractor shall be returned to the City. Contractor is authorized by the City to retain copies of such data and materials at Contractor's expense.

III. OWNERSHIP OF WORK PRODUCT

The City acknowledges that Contractor's documents produced under this Agreement are instruments of professional services. Nevertheless, upon payment to Contractor pursuant to this Agreement, all work, data, drawings, designs, plans, reports, computer programs (non-proprietary), computer input and output, analyses, tests, maps, surveys, or any other materials developed for this Project are, and shall be, the sole and exclusive property of the City. However, any reuse of the documents by the City without prior written authorization by Contractor other than for the specific intended purpose of this Agreement will be at the City's sole risk. Contractor will provide the City with a ten (10) day written notice prior to disposal of Project documents it has retained, during which time the City may take physical possession of same at the storage site.

IV. COMPENSATION

A. Compensation shall not exceed **amounts as described in Exhibit A-1 for the work described in Exhibit A.** Payment shall be made in accordance with the schedule of charges in **Exhibit A-1.** Invoices will be itemized and include hourly breakdown for all personnel and other charges.

B. Contractor may submit monthly or periodic statements requesting payment. Such request shall be based upon the amount and value of the work and services performed by Contractor under this Agreement except as otherwise supplemented or accompanied by such supporting data as may be required by the City.

1. All invoices, including Contractor's verified payment request, shall be submitted by Contractor to the City no later than the twenty-fourth (24th) day of each month for payment pursuant to the terms of this Agreement. In the event Contractor fails to submit any invoice on or before the twenty-fourth (24th) day of any given month, Contractor defers its right to payment pursuant to said late invoice until the twenty-fourth (24th) day of the following month.

2. Progress payments may be claimed on a monthly basis for reimbursable costs actually incurred to date as supported by detailed statements, including hourly breakdowns for all personnel and other charges. The amounts of all such monthly payments shall be paid within thirty (30) days after the timely receipt of invoice as provided by this Agreement.

C. The City has the right to ask for clarification on any Contractor invoice after receipt of the invoice by the City.

D. In the event payment for services rendered has not been made within forty-five (45) days from the receipt of the invoice for any uncontested billing, interest will accrue at the legal rate of interest. In the event payment has not been made within ninety (90) days from the receipt of the invoice for any uncontested billing, Contractor may, after giving seven (7) days written notice and without penalty or liability of any nature, suspend all work on all authorized services specified herein. In the event payment in full is not received within thirty (30) days of giving the seven (7) days written notice, Contractor may terminate this Agreement. Upon receipt of payment in full for services rendered, Contractor will continue with all authorized services.

E. Final payment shall be made within sixty (60) calendar days after all data and reports (which are suitable for reproduction and distribution by the City) required by this Agreement have been turned over to and approved by the City and upon receipt by the City of Contractor's certification that services required herein by Contractor have been fully completed in accordance with this Agreement and all data and reports for the Project.

V. COMMENCEMENT AND COMPLETION OF WORK

Contractor shall commence work upon the execution of this Agreement. This Agreement shall be completed by **January 12, 2022.**

VI. PROFESSIONAL RESPONSIBILITY

A. Contractor hereby represents that it is qualified to assume the responsibilities and render the services described herein and has all requisite corporate authority and professional licenses in good standing, required by law.

B. The work performed by Contractor shall be in accordance with generally accepted professional practices and the level of competency presently maintained by other practicing professional firms in the same or similar type of work in the applicable community.

C. Contractor shall be responsible for the professional quality, technical accuracy, timely completion, and coordination of all designs, drawings, specifications, reports, and other services furnished by Contractor under this Agreement. Contractor shall, without additional compensation, correct or resolve any errors or deficiencies in its designs, drawings, specifications, reports, and other services which fall below the standard of professional practice.

D. Approval by the City of drawings, designs, specifications, reports, and incidental work or materials furnished hereunder shall not in any way relieve Contractor of responsibility for technical adequacy of the work. Neither the City's review, approval, or acceptance of, nor payment for, any of the services shall be construed to operate as a waiver of any rights under this Agreement, and Contractor shall be and remain liable in accordance with applicable performance of any of the services furnished under this Agreement.

E. The rights and remedies of the City provided for under this Agreement are in addition to any other rights and remedies provided by law.

VII. COMPLIANCE WITH LAW

A. The work and services to be performed by Contractor hereunder shall be done in compliance with applicable laws, ordinances, rules, and regulations.

B. Illegal Aliens.

1. Certification. By entering into this Agreement, Contractor hereby certifies that, at the time of this certification, it does not knowingly employ or contract with an illegal alien who will perform work under the Agreement and that Contractor will participate in either the E-Verify Program administered by the United States Department of Homeland Security and Social Security Administration or the Department Program administered by the Colorado Department of Labor and Employment in order to confirm the employment eligibility of all employees who are newly hired for employment to perform work under the Agreement.

2. Prohibited Acts. Contractor shall not:

a. Knowingly employ or contract with an illegal alien to perform work under this Agreement; or

b. Enter into a contract with a subcontractor that fails to certify to Contractor that the subcontractor shall not knowingly employ or contract with an illegal alien to perform work under this Agreement.

3. Verification.

a. Contractor has confirmed the employment eligibility of all employees who are newly hired for employment to perform work under this Agreement through participation in either the E-Verify Program or the Department Program.

b. Contractor shall not use the E-Verify Program or the Department Program procedures to undertake pre-employment screening of job applicants while this Agreement is being performed.

c. If Contractor obtains actual knowledge that a subcontractor performing work under this Agreement knowingly employs or contracts with an illegal alien who is performing work under the Agreement, Contractor shall:

i. Notify the subcontractor and the City within three (3) days that Contractor has actual knowledge that the subcontractor is employing or contracting with an illegal alien who is performing work under the Agreement; and

ii. Terminate the subcontract with the subcontractor if within three (3) days of receiving the notice required pursuant to subparagraph (i) hereof, the subcontractor does not stop employing or contracting with the illegal alien who is performing work under the Agreement; except that Contractor shall not terminate the contract with the subcontractor if during such three (3) days the subcontractor provides information to establish that the subcontractor has not knowingly employed or contracted with an illegal alien who is performing work under the Agreement.

4. Duty to Comply with Investigations. Contractor shall comply with any reasonable request by the Colorado Department of Labor and Employment made in the course of an investigation conducted pursuant to C.R.S. § 8-17.5-102(5)(a) to ensure that Contractor is complying with the terms of this Agreement.

5. If Contractor does not currently employ any employees, Contractor shall sign the No Employee Affidavit attached hereto.

6. If Contractor wishes to verify the lawful presence of newly hired employees who perform work under the Agreement via the Department Program, Contractor shall sign the Department Program Affidavit attached hereto.

VIII. INDEMNIFICATION

INDEMNIFICATION FOR PROFESSIONAL NEGLIGENCE: The Contractor shall, to the fullest extent permitted by law, indemnify and hold harmless the City, its Council members, and any of its officials, officers, directors, and employees from and against damages, liability, losses, costs and expenses, including reasonable attorney's fees, but only to the extent caused by or arising out of the negligent acts, errors or omissions of the Contractor, its employees, agents or subcontractors, or others for whom the Contractor is legally liable, in the performance of professional services under this Agreement. The Contractor is not obligated under this paragraph VIII. to indemnify the City for the negligent acts of the City, its Council members, or any of its officials, officers, directors, agents and employees.

IX. INSURANCE

A. The Contractor agrees to obtain and maintain during the life of the Agreement, a policy or policies of insurance against all liability, claims, demands and other obligations assumed by the Contractor pursuant to Section VIII above. Such insurance shall be in addition to any other insurance requirements imposed by the Agreement or by law. The Contractor shall not be relieved of any liability, claims, demands, or other obligations assumed pursuant to Section VIII above, by reason of its failure to obtain and maintain during the life of the Agreement insurance in sufficient amounts, durations, or types.

B. Contractor shall obtain and maintain during the life of the Agreement, and shall cause any subcontractor to obtain and maintain during the life of the Agreement, the minimum insurance coverages listed below. Such coverages shall be obtained and maintained with forms and insurers acceptable to the City. All coverages shall be continuously maintained to cover all liability, claims, demands and other obligations assumed by the Contractor pursuant to Section VIII above. In the case of any claims-made policy, the necessary retroactive dates and extended reporting periods shall be procured to maintain such continuous coverage.

1. **Worker's Compensation Insurance** to cover obligations imposed by applicable law for any employee engaged in the performance of the work under the Agreement, and Employers Liability Insurance with minimum limits of six hundred thousand dollars ($600,000) each incident, one million dollars ($1,000,000) disease—policy limit, and one million dollars ($1,000,000) disease—each employee. Evidence of qualified self-insured status may be substituted for the worker's compensation requirements under this paragraph.

2. **Commercial general liability insurance** with minimum combined single limits of six hundred thousand dollars ($600,000) each occurrence and one million dollars ($1,000,000) general aggregate. The policy shall be applicable to all premises and operations. The policy shall include coverage for bodily injury broad form property damage (including completed operations), personal injury (including coverage for contractual and employee acts), blanket contractual products, and completed operations. This policy shall contain a severability of interests provision.

3. **Professional liability insurance** with minimum limits of six hundred, thousand dollars ($600,000) each claim and one million dollars ($1,000,000) general aggregate.

4. **The policy required by paragraph 2., above, shall be endorsed to include the City and the City's officers, employees, and Contractors as additional insureds.** The policy required in Paragraphs 1 and 2 above shall be primary insurance, and any insurance carried by the City, its officers, its employees, or its Contractors shall be excess and not contributory insurance to that provided by Contractor. No additional insured endorsement to the policy required by paragraph 1., above, shall contain any exclusion for bodily injury or property damage arising from completed operations. Contractor shall be solely responsible for any deductible losses under any policy required above.

5. The certificate of insurance provided for the City shall be completed by Contractor's insurance agent as evidence that policies providing the required coverages, conditions, and minimum limits are in full force and effect, and shall be reviewed and approved by the City prior to commencement of the Agreement. No other form of certificate shall be used. The certificate shall identify this Agreement and shall provide that the coverages afforded under the policies shall not be cancelled, terminated, or materially changed until at least thirty (30) days prior written notice has been given to the City. The completed certificate of insurance shall be sent to:

City of Black Hawk
P.O. Box 68
Black Hawk, Colorado 80422-0068
Attn: City Clerk

6. Failure on the part of Contractor to procure or maintain policies providing the required coverages, conditions, and minimum limits shall constitute a material breach of agreement upon which the City may immediately terminate this Agreement, or at its discretion, the City may procure or renew any such policy or any extended reporting period thereto and may pay any and all premiums in connection therewith, and all monies so paid by the City shall be repaid by Contractor to the City upon demand, or the City may offset the cost of the premiums against any monies due to Contractor from the City.

7. The City reserves the right to request and receive a certified copy of any policy and any endorsement thereto.

8. The parties hereto understand and agree that the City, its officers, and its employees, are relying on, and do not waive or intend to waive by any provision of this Agreement, the monetary limitations or any other rights, immunities, and protections provided by the Colorado Governmental Immunity Act, Colo. Rev. Stat. §24-10-114 et seq., 13 Colo. Rev. Stat., as from time to time amended, or otherwise available to the City, its officers, its employees, or agents.

X. NON-ASSIGNABILITY

Neither this Agreement, nor any of the rights or obligations of the parties hereto, shall be assigned by either party without the written consent of the other.

XI. TERMINATION

This Agreement shall terminate upon the City's providing Contractor with thirty (30) days advance written notice. In the event the Agreement is terminated by the City's issuance of said written notice of intent to terminate, the City shall pay Contractor for all work previously authorized and completed prior to the date of termination. If, however, Contractor has substantially or materially breached the standards and terms of this Agreement, the City shall have any remedy or right of set-off available at law and equity. If the Agreement is terminated for any reason other than cause prior to completion of the Project, any use of documents by the City thereafter shall be at the City's sole risk, unless otherwise consented to by Contractor.

XII. VENUE

This Agreement shall be governed by the laws of the State of Colorado, and any legal action concerning the provisions hereof shall be brought in the County of Gilpin, State of Colorado.

XIII. INDEPENDENT CONTRACTOR

Contractor is an independent contractor. Notwithstanding any provision appearing in this Agreement, all personnel assigned by Contractor to perform work under the terms of this Agreement shall be, and remain at all times, employees or agents of Contractor for all purposes. Contractor shall make no representation that it is the employee of the City for any purpose.

XIV. NO WAIVER

Delays in enforcement or the waiver of any one or more defaults or breaches of this Agreement by the City shall not constitute a waiver of any of the other terms or obligations of this Agreement.

XV. NOTICE

Any notice or communication between Contractor and the City which may be required, or which may be given, under the terms of this Agreement, shall be in writing and shall be deemed to have been sufficiently given when directly presented or sent pre-paid, first class United States Mail, addressed as follows:

The City:
City of Black Hawk
P.O. Box 68
Black Hawk, Colorado 80422-0068
Attn: **Cynthia Linker**
Community Planning & Development Director

The Contractor:

Pinyon Environmental, Inc.
Corporate Headquarters
3222 South Vance Street
Lakewood, CO 80227
Attn: Brian Partington, Principal – Project Delivery

XVI. ENTIRE AGREEMENT

This Agreement and the attached exhibits constitute the entire Agreement between Contractor and the City, superseding all prior oral or written communications. None of the provisions of this Agreement may be amended, modified, or changed, except as specified herein.

IN WITNESS WHEREOF, the parties hereto each herewith subscribe the same in duplicate.

CITY OF BLACK HAWK, COLORADO

By: _____
David D. Spellman, Mayor

ATTEST:

_____
Melissa A. Greiner, CMC
City Clerk

APPROVED AS TO FORM:

_____
Corey Y. Hoffmann, City Attorney

PINYON ENVIRONMENTAL, INC.

By: Shannon M. Lucio
~~Brian Partington~~ Shannon Lucio

Its: **Principal**

STATE OF COLORADO)
) **ss.**
COUNTY OF JEFFERSON)

The foregoing instrument was subscribed, sworn to, and acknowledged before me this 5th day of January, 2021, by ~~Brian Partington as the Principal of Pinyon Environmental, Inc.~~ Shannon Lucio CAROL M'CARTHY

My commission expires: Aug 20, 2024

(S E A L)

CAROL ANN MCCARTHY
Notary Public
State of Colorado
Notary ID # 20204029078
My Commission Expires 08-20-2024

Notary Public

PROSPECTIVE CONTRACTOR'S CERTIFICATE REGARDING EMPLOYING OR CONTRACTING WITH AN ILLEGAL ALIEN

FROM: **Pinyon Environmental, Inc.**
Corporate Headquarters
3222 South Vance Street
Lakewood, CO 80227

TO: **City of Black Hawk**
P.O. Box 68
Black Hawk, Colorado 80422-0068

Project Name: **On-Call Historic Preservation Consulting and Advising Services**

Bid Number: **N/A** Project Number: **N/A**

As a prospective Contractor for the above-identified bid, I (we) do hereby certify that, as of the date of this certification, I (we) do not knowingly employ or contract with an illegal alien who will perform work under the Agreement and that I (we) will confirm the employment eligibility of all employees who are newly hired for employment to perform work under the Agreement through participation in either the E-Verify Program administered by the United States Department of Homeland Security and Social Security Administration or the Department Program administered by the Colorado Department of Labor and Employment.

Executed this 5th day of January, 20 21

Prospective Contractor: **Pinyon Environmental, Inc.**

By: Shannon Lucio
~~Brian Partington~~ Shannon Lucio
Title: **Principal**

NO EMPLOYEE AFFIDAVIT

This Page Not Applicable

1. Check and complete one:

☐ I, _____, am a sole proprietor doing business as _____. I do not currently employ any individuals. Should I employ any individuals during the term of my Agreement with the City, I certify that I will comply with the lawful presence verification requirements outlined in that Agreement.

OR

☐ I, _____, am an owner/member/shareholder of _____, a _____[specify type of entity-*i.e.*, corporation, limited liability company], that does not currently employ any individuals. Should I employ any individuals during the term of my Agreement with the City, I certify that I will comply with the lawful presence verification requirements outlined in that Agreement.

2. Check one.

☐ I, _____, am a United States citizen or legal permanent resident.

The City must verify this statement by reviewing one of the following items:

- *A valid Colorado Driver's license or a Colorado identification card*
- *A United States military card or a military dependent's identification card*
- *A United States Coast Guard Merchant Mariner card*
- *A Native American tribal document or*
- *In the case of a resident of another state, the driver's license or state-issued identification card from the state of residence, if that state requires the applicant to prove lawful presence prior to the issuance of the identification card*
- *Any other documents or combination of documents listed in the City's "Acceptable Documents for Lawful Presence Verification" chart that prove both the contractor's citizenship/lawful presence and identity.*

OR

☐ I am otherwise lawfully present in the United States pursuant to federal law.

Contractor must verify this statement through the federal systematic alien verification of entitlement program, the "SAVE" program, and provide such verification to the City.

_____ _____

Signature Date

DEPARTMENT PROGRAM AFFIDAVIT

(To be completed if Contractor participates in the Department of Labor Lawful Presence Verification Program)

I, **Shannon Lucio**, as a public contractor under contract with the City of Black Hawk (the "City"), hereby affirm that:

1. I have examined or will examine the legal work status of all employees who are newly hired for employment to perform work under this public contract for services ("Contract") with the Town within twenty (20) days after such hiring date;

2. I have retained or will retain file copies of all documents required by 8 U.S.C. § 1324a, which verify the employment eligibility and identity of newly hired employees who perform work under the Agreement; and

3. I have not and will not alter or falsify the identification documents for my newly hired employees who perform work under the Agreement.

Shannon M. Lucio
Contractor Signature
Shannon Lucio
Pinyon Environmental, Inc.

January 5, 2021 SML
Date

STATE OF COLORADO)
) **ss.**
COUNTY OF JEFFERSON)

The foregoing instrument was subscribed, sworn to and acknowledged before me this 5th day of January, 20 21, by ~~**Shannon Lucio as Principal of Pinyon Environmental, Inc.**~~ SML

CAROL MCCARTHY

My commission expires: 8.20.2024

(S E A L)

CAROL ANN MCCARTHY
Notary Public
State of Colorado
Notary ID # 20204029078
My Commission Expires 08-20-2024

Notary Public

ACCEPTABLE DOCUMENTS FOR LAWFUL PRESENCE VERIFICATION

Documents that Serve to Prove Citizenship/Lawful Presence and Identification:

- Colorado Driver's License or Identification Card
- Out of State drivers license from: AL, AZ, AR, CA, CT, DE, DC, FL, GA, ID, IN, IA, KS, KY, LA, ME, MN, MS, MO, MT, NV, NH, NJ, NY, ND, OH, OK, PA, RI, SC, SD, VA, WV, WY
- A United States Military Card of a Military Dependent's Identification Card
- A United States Coast Guard or Merchant Mariner Card
- A Native American Tribal Document
- Certificate of Naturalization with Photograph
- Certificate of U.S. Citizenship with Photograph
- U.S. Passport (less than 5 years old)
- Northern Mariana Identification Card with Photograph

OR

Documents that Only Serve to Prove Citizenship/Lawful Presence:

- U.S. Birth Certificate
- Certification of Report of Birth from Department of State
- Report of Birth Abroad of a U.S. Citizen
- U.S. Citizen Identification Card
- Final Adoption Decree
- Evidence of U.S. Civil Service Employment before June 1, 1976
- Statement Provided by U.S. Consular Officer Certifying Citizenship
- Religious Records Recorded in the 50 states, D.C., or a U.S. Territory Showing Birth Date or Child's Age and Location of Birth in U.S.
- Early School Records
- Census Records
- Other Documents that Establish a U.S. Place of Birth or in Some Way Indicates U.S. Citizenship

AND

Documents that Serve to Prove Identification:

- A Driver's License or Identification Card Regardless of the State of Issuance
- School Identification Card with Photograph
- Identification Card Issued by Federal, State or Local Government
- A Driver's License Issued by a Canadian Government Authority

EXHIBIT A

2021 - SCOPE OF SERVICES
PINYON ENVIRONMENTAL, INC.

Services and responsibilities may include, but not necessarily be limited to, the following:

1. Provide Historic Preservation Consulting Services.
2. Advise Black Hawk Historic Preservation Commission.
3. Advise Black Hawk City Council.
4. Advise Black Hawk City Staff.

The **City of Black Hawk** may provide a **Scope of Work** to **Pinyon Environmental, Inc.** on a project-by-project basis.

Pinyon Environmental, Inc. may provide a quote based on the attached **Schedule of Charges - Exhibit A-1** and **Scope of Work** provided by the **City of Black Hawk** on a project-by-project basis.

EXHIBIT A-1

2021 - SCHEDULE OF CHARGES
PINYON ENVIRONMENTAL, INC.

The City shall pay **Pinyon Environmental, Inc.** a retainer of One Thousand Dollars ($1,000.00) per month, which amount shall be paid to **Pinyon Environmental, Inc** as a minimum amount paid on a monthly basis to **Pinyon Environmental, Inc.**

Pinyon Environmental, Inc shall invoice the City in accordance with this Schedule of Charges, and Section IV of this Agreement.

Pinyon Environmental, Inc shall be paid for all invoiced work on a monthly basis to the extent such invoiced work exceeds One Thousand Dollars ($1,000.00), but in the event such invoiced work is less than One Thousand Dollars ($1,000.00), **Pinyon Environmental, Inc** shall nonetheless be due the retainer amount of One Thousand Dollars ($1,000.00).

PINYON ENVIRONMENTAL, INC.
SCHEDULE OF STANDARD RATES - 2021

Pinyon Environmental Inc

Schedule of Unit Rates – 2021

Labor/Employee Type	General Responsibilities	Rate
Administration	General project administration, project support.	$64
Regulated Materials Specialist	Completes field services, including air clearances for asbestos/IH abatement or remediation projects, or field oversight for soil remediation projects such as asbestos with soil removal that requires an Air Monitoring Specialist.	$81
Field Specialist / Project Assistant	Data management and administrative support, invoicing; maintain field equipment; administrative contract control.	$85
Regulated Materials Specialist I	Completes more complicated tasks than the Regulated Materials Specialist, including small building inspection surveys, contractor oversight, and air clearances; will also complete or manage individual tasks assigned by others, and assemble data for reports.	$89
Field Engineer/ Scientist	Conducts routine field surveys to support General Professional levels, as well as compilation of scientific data collection and research.	$99
Field Engineer/ Scientist I	Conducts and supervises complex field surveys to support General Professional levels, as well as compilation of scientific data collection and research.	$107
CAD/GIS Specialist	AutoCAD, floor plans, elevations, sections, scale drawings, layering and concept design for architects and engineers. Duties may include configuring and maintaining CAD libraries, engineering documentation management systems and CAD computer network systems. GIS Specialist Utilizes programs such ESRI ArcGIS to graphically present data or create figures or maps.	$89
CAD/GIS Specialist I	CAD Specialist I is responsible for supervising junior-level staff configuring and maintaining CAD libraries, engineering documentation management systems and CAD computer network systems. Individual may possess knowledge of 3-D High-Tech Animation for software 3-D Studio Maxx or 3-D Studio VIZ. GIS Specialist I is responsible for conducting GIS data acquisition, input, conversion, documentation, mapping, and analysis on projects.	$115
CAD/GIS Specialist II	CAD Specialist II is responsible for supervising junior and mid-level staff configuring and maintaining CAD libraries, engineering documentation management systems and CAD computer network systems. Individual may possess knowledge of 3-D High-Tech Animation for software 3-D Studio Maxx or 3-D Studio VIZ. GIS Specialist I is responsible for conducting GIS data acquisition, input, conversion, documentation, mapping, and analysis on projects.	$125
CAD/GIS Specialist III	Directs and gathers GIS data and prepares complex reporting and analysis. Oversight of technical products related to GIS project management support. Conducts GIS data conversion, documentation, mapping and analysis. Utilizes software such as ESRI ArcGIS, and interprets data for various technical disciplines (e.g., biology, economics, NEPA).	$150
Assistant Historian	Conducts research and field services in support of a technical lead.	$64
Field Historian	Conducts research to support evaluation and development of recommendations for the significance, effect, and treatment of cultural resources.	$89
Archaeologist/ Historian	Conducts research to support evaluation and development of recommendations for the significance, effect, and treatment of cultural resources. Writes technical reports.	$115
Archaeologist/ Historian I	Implements initial evaluations and recommendations for significance, effect, and treatment of cultural resources, and writes descriptive technical reports.	$125
Archaeologist/ Historian II	Prepares complex reporting and analysis, including oversight of technical products related to historic, archeological, paleontological, Section 106 and Section 4(f) resources. Directs the implementation of initial evaluations and recommendations for significance, effect, and treatment of cultural resources.	$150
Archaeologist/ Historian III	Responsible for technical completeness and competency of all submissions and work performed, including performance of junior- and mid-level archaeologists and historians; development of work plans, research designs, and mitigation proposals; adherence to professional standards; and integration of field data into comparative regional perspectives for analytical (evaluative) purposes.	$183
Economist	Conducts data gathering; conducts analysis and performance of economic evaluations; conducts economic demographic analysis; prepares sections of technical reports.	$115
Economist I	Conducts more complex analysis and economic evaluations; conducts economic demographic analysis; responsible for preparation and review of technical reports.	$125
Economist II	Directs and gathers data and prepares complex reporting and analysis. Oversight of economic evaluations and economic demographic analysis.	$150
Economist III	Responsible for technical completeness and competency of all submissions and work performed, including performance of junior- and mid-level staff conducting economic evaluations and report writing. Conducts complex economic analysis and report writing.	$190
Engineer	Conducts the collection and initial interpretation of engineering, and assists with the preparation of figures, exhibits, charts and data tables.	$115
Engineer I	Conducts data analysis and input, field data gathering, and miscellaneous field services related to environmental engineering, and writes descriptive technical reports.	$125
Engineer II	Prepares complex reporting and analysis including oversight of technical products related to engineering studies, requirement development and programming, engineering site investigations and evaluation, facility criteria development, facility requirements development, budget and programming support, environmental analyses and program execution.	$150

Pinyon

Schedule of Unit Rates – 2021

Labor/Employee Type	General Responsibilities	Rate
Engineer III	Responsible for technical completeness and competency of all submissions and work performed, including performance of junior- and mid-level engineers; performing engineering studies; developing requirements and programming; engineering site investigations and evaluation; facility criteria development; facility requirements development, budget and programming support; and environmental analyses and program execution.	$190
Industrial Hygienist	Completes field services, including Certified Asbestos Building Inspection surveys, contractor bid development and support, and complicated oversight and air quality clearances.	$115
Industrial Hygienist I	Conducts industrial hygiene and/or hazardous materials (e.g., asbestos, lead paint, mold) assessments and investigations, asbestos sampling, asbestos in soil evaluations/monitoring, and design. Gathers and correlates data and evaluates information for preparation of technical reports.	$125
Industrial Hygienist II	Prepares complex reporting and analysis, including oversight of technical products related to regulated materials and industrial hygiene, workplace safety, asbestos, mold and lead. Directs field surveys related to industrial hygiene studies, such as asbestos, lead, mold or other regulated materials. Gathers and correlates data and evaluates information for preparation of technical reports.	$150
Industrial Hygienist III	Responsible for technical completeness and competency of all submissions and work performed, including performance of junior- and mid-level industrial hygienists; development of work plans; complicated designs and mitigation; adherence to regulatory standards; and integration of field data into comprehensive documents.	$190
Scientist	Conducts the collection and initial interpretation of scientific data, such as soil logging, soil and groundwater sampling, water-level surveying, scientific data, noise or air measurements.	$115
Scientist I	Conducts data analysis and input, field data gathering, miscellaneous field services related to NEPA, air quality, noise, geology, chemistry and environmental science, and writes descriptive technical reports.	$125
Scientist II	Directs the gathering of data and prepares complex reporting and analysis. Oversight of technical products and development of detailed studies related to NEPA, air quality, noise, environmental justice, biology, geology, chemistry and environmental science.	$150
Scientist III	Responsible for technical completeness and competency of all submissions and work performed, including performance of junior- and mid-level planners and scientists. Conduct and supervise professional and technical staff to complete studies focused on planning, NEPA evaluations, air quality, noise, biology, geology, chemistry and environmental science.	$190
Project Manager	Project management on routine projects. Develops project requirements, site investigations, facility requirements development, budget and programming support, analyses, and project execution. Familiar with planning, supervising and overseeing the overall project tasks.	$150
Project Manager I	Project management on moderately complex projects, including coordination of multi-disciplinary teams, preparing responses to agency questions, and facilitates project meetings with client and regulators. Develops project requirements, site investigations, facility requirements development, budget and programming support, analyses and project execution.	$163
Project Manager II	Project management, including coordination of multi-disciplinary teams, negotiating complex solutions with regulatory agencies and stakeholders, leads public information meetings, and develops and implements complex project strategies.	$180
Program Manager	Responsible for planning, scheduling and overseeing the overall program as well as directing and coordinating various project tasks. The Program Manager also maintains a productive and effective client relationship with the most senior levels of the client organization.	$188
Executive Management	Responsible for providing strategic direction, vision, and leadership. Performs senior-level QA/QC and conducts meetings and negotiations with regulatory and oversight agencies.	$205
Expert Witness	Expert Witness Preparation and Deposition.	$225

Lump Sum Equipment Charges	
General Field Visits (general projects, asbestos sampling kit [bulk sampling])	$50/day
Biological Field Visit (includes sub-meter GPS, wetland flags, field notebook, and other incidentals)	$250/day
Soil Logging/Screening (during drilling/test pits; includes PID or other instruments, GPS, and other incidentals)	$250/day
Groundwater Sampling (includes YSI field measurements, water level meter, bailers, and other incidentals)	$250/day
Noise Monitoring	$250/day
Asbestos Air Monitoring Field Kit	$115/day
Mileage (passenger car)	Current IRS rate
Outside Expenses (e.g., shipping, rental equipment, travel, subcontractor/subconsultant, laboratory fees)	Cost + 10%
Specialty In-House Equipment Billed as Indicated in Project-specific Proposals	

INSURANCE CERTIFICATE

Client#: 1083268 PINYOENV

ACORD CERTIFICATE OF LIABILITY INSURANCE

DATE (MM/DD/YYYY): 8/03/2020

THIS CERTIFICATE IS ISSUED AS A MATTER OF INFORMATION ONLY AND CONFERS NO RIGHTS UPON THE CERTIFICATE HOLDER. THIS CERTIFICATE DOES NOT AFFIRMATIVELY OR NEGATIVELY AMEND, EXTEND OR ALTER THE COVERAGE AFFORDED BY THE POLICIES BELOW. THIS CERTIFICATE OF INSURANCE DOES NOT CONSTITUTE A CONTRACT BETWEEN THE ISSUING INSURER(S), AUTHORIZED REPRESENTATIVE OR PRODUCER, AND THE CERTIFICATE HOLDER.

IMPORTANT: If the certificate holder is an ADDITIONAL INSURED, the policy(ies) must have ADDITIONAL INSURED provisions or be endorsed. If SUBROGATION IS WAIVED, subject to the terms and conditions of the policy, certain policies may require an endorsement. A statement on this certificate does not confer any rights to the certificate holder in lieu of such endorsement(s).

PRODUCER
USI Insurance Services, LLC
P.O. Box 7050
Englewood, CO 80155
800 873-8500

CONTACT NAME:
PHONE (A/C, No, Ext): 800 873-8500 FAX (A/C, No):
E-MAIL ADDRESS:

INSURER(S) AFFORDING COVERAGE	NAIC #
INSURER A : Admiral Insurance Company	24856
INSURER B : Sentinel Insurance Company Ltd.	11000
INSURER C : Hartford Underwriters Insurance Co.	30104
INSURER D :	
INSURER E :	
INSURER F :	

INSURED
Pinyon Environmental, Inc. dba: Pinyon Environmental Engineering Resources Inc
3222 S. Vance St., #200
Lakewood, CO 80227

COVERAGES CERTIFICATE NUMBER: REVISION NUMBER:

THIS IS TO CERTIFY THAT THE POLICIES OF INSURANCE LISTED BELOW HAVE BEEN ISSUED TO THE INSURED NAMED ABOVE FOR THE POLICY PERIOD INDICATED. NOTWITHSTANDING ANY REQUIREMENT, TERM OR CONDITION OF ANY CONTRACT OR OTHER DOCUMENT WITH RESPECT TO WHICH THIS CERTIFICATE MAY BE ISSUED OR MAY PERTAIN, THE INSURANCE AFFORDED BY THE POLICIES DESCRIBED HEREIN IS SUBJECT TO ALL THE TERMS, EXCLUSIONS AND CONDITIONS OF SUCH POLICIES. LIMITS SHOWN MAY HAVE BEEN REDUCED BY PAID CLAIMS.

INSR LTR	TYPE OF INSURANCE	ADDL INSR	SUBR WVD	POLICY NUMBER	POLICY EFF (MM/DD/YYYY)	POLICY EXP (MM/DD/YYYY)	LIMITS	
A	X COMMERCIAL GENERAL LIABILITY	X	X	FEIECC1713907	08/13/2020	08/13/2021	EACH OCCURRENCE	$1,000,000
	CLAIMS-MADE X OCCUR						DAMAGE TO RENTED PREMISES (Ea occurrence)	$50,000
	X BI/PD Ded:5,000						MED EXP (Any one person)	$5,000
							PERSONAL & ADV INJURY	$1,000,000
	GEN'L AGGREGATE LIMIT APPLIES PER:						GENERAL AGGREGATE	$2,000,000
	POLICY X PRO-JECT LOC						PRODUCTS - COMP/OP AGG	$2,000,000
	OTHER:							$
C	AUTOMOBILE LIABILITY	X	X	34UEGFZ8225	08/13/2020	08/13/2021	COMBINED SINGLE LIMIT (Ea accident)	$1,000,000
	X ANY AUTO						BODILY INJURY (Per person)	$
	OWNED AUTOS ONLY / SCHEDULED AUTOS						BODILY INJURY (Per accident)	$
	X HIRED AUTOS ONLY / X NON-OWNED AUTOS ONLY						PROPERTY DAMAGE (Per accident)	$
								$
A	UMBRELLA LIAB X OCCUR	X	X	FEIEXS1714007	08/13/2020	08/13/2021	EACH OCCURRENCE	$4,000,000
	X EXCESS LIAB CLAIMS-MADE						AGGREGATE	$4,000,000
	DED RETENTION $							$
B	WORKERS COMPENSATION AND EMPLOYERS' LIABILITY Y/N	N/A	X	34WEGBX3924	08/13/2020	08/13/2021	X PER STATUTE OTH-ER	
	ANY PROPRIETOR/PARTNER/EXECUTIVE OFFICER/MEMBER EXCLUDED? N						E.L. EACH ACCIDENT	$1,000,000
	(Mandatory in NH)						E.L. DISEASE - EA EMPLOYEE	$1,000,000
	If yes, describe under DESCRIPTION OF OPERATIONS below						E.L. DISEASE - POLICY LIMIT	$1,000,000
A	Professional Liability Claims Made		X	FEIECC1713907	08/13/2020	08/13/2021	$1,000,000 Per claim $2,000,000 Aggregate	

DESCRIPTION OF OPERATIONS / LOCATIONS / VEHICLES (ACORD 101, Additional Remarks Schedule, may be attached if more space is required)

As required by written contract or written agreement, the following provisions apply subject to the policy terms, conditions, limitations and exclusions: The Certificate Holder and owner are included as Automatic Additional Insured's for ongoing and completed operations under General Liability; Additional Insured under Pollution Liability; Designated Insured under Automobile Liability; and Additional Insureds under Umbrella / Excess Liability but only with respect to liability arising out of the Named Insured work performed on (See Attached Descriptions)

CERTIFICATE HOLDER

City of Black Hawk
Attn: City Clerk
P.O. Box 68
Black Hawk, CO 80422-0068

CANCELLATION

SHOULD ANY OF THE ABOVE DESCRIBED POLICIES BE CANCELLED BEFORE THE EXPIRATION DATE THEREOF, NOTICE WILL BE DELIVERED IN ACCORDANCE WITH THE POLICY PROVISIONS.

AUTHORIZED REPRESENTATIVE

© 1988-2015 ACORD CORPORATION. All rights reserved.

The ACORD name and logo are registered marks of ACORD

PPKZP

DESCRIPTIONS (Continued from Page 1)

behalf of the certificate holder and owner. The General Liability, Automobile Liability, Umbrella/Excess Insurance applies on a primary and non contributory basis. A Blanket Waiver of Subrogation applies for General Liability, Automobile Liability, Umbrella/Excess Liability, Pollution Liability, Workers Compensation and Professional Liability. The Umbrella / Excess Liability policy provides excess coverage over the General Liability, Automobile Liability, Employers Liability, Contractors Pollution Liability & Professional Liability.

Please note that Additional Insured status does not apply to Professional Liability or Workers' Compensation.

Pollution Liability Limits:
$1,000,000 Each Occurrence, Claim or Pollution Condition
$2,000,000 Aggregate

RE: Historic Preservation Consulting and Advising Service.
Additional Insured: City of Black Hawk and their officers and employees.

CITY OF BLACK HAWK, COLORADO

AGREEMENT FOR PROFESSIONAL SERVICES
SAFEBUILT LLC.

RESOLUTION 4-2021
JANUARY 13, 2021

AGREEMENT FOR PROFESSIONAL SERVICES

THIS AGREEMENT is made and entered into this **1st day of January, 2021**, by and between the **CITY OF BLACK HAWK**, State of Colorado, a Colorado municipal corporation (hereinafter referred to as the "City") and **SAFEbuilt LLC** hereinafter referred to as **"Contractor"**).

RECITALS:

A. The City requires **a committed team of knowledgeable certified professionals to support the City by providing all-inclusive building official services, administrative support, building Code services that include adoption and enforcement, Code compliance, plan reviews and inspections for the ongoing maintenance of their full service building department on an "On-Call" basis (the Project").**

B. Contractor has held itself out to the City as having the requisite expertise and experience to perform the required work for the Project.

NOW, THEREFORE, it is hereby agreed for the consideration hereinafter set forth, that Contractor shall provide to the City, **certified, trained and dedicated individuals** for the Project.

I. SCOPE OF SERVICES

Contractor shall complete the scope of services as described in **Exhibit A** attached hereto and incorporated herein by this reference. Contractor shall furnish all labor and materials to perform the work and services required for the complete and prompt execution and performance of all duties, obligations, and responsibilities for the Project.

II. THE CITY'S OBLIGATIONS/CONFIDENTIALITY

The City shall provide Contractor with reports and such other data as may be available to the City and reasonably required by Contractor to perform hereunder. No project information shall be disclosed by Contractor to third parties without the prior written consent of the City or pursuant to a lawful court order directing such disclosure. All documents provided by the City to Contractor shall be returned to the City. Contractor is authorized by the City to retain copies of such data and materials at Contractor's expense.

III. OWNERSHIP OF WORK PRODUCT

The City acknowledges that Contractor's documents produced under this Agreement are instruments of professional services. Nevertheless, upon payment to Contractor pursuant to this Agreement, all work, data, drawings, designs, plans, reports, computer programs (non-proprietary), computer input and output, analyses, tests, maps, surveys, or any other materials developed for this Project are, and shall be, the sole and exclusive property of the City. However, any reuse of the documents by the City without prior written authorization by Contractor other than for the specific intended purpose of this Agreement will be at the City's sole risk. Contractor will provide the City with a ten (10) day written notice prior to disposal of Project documents it has retained, during which time the City may take physical possession of same at the storage site.

IV. COMPENSATION

A. Compensation shall not exceed **amounts as described in Exhibit A-1 for the work described in Exhibit A**. Payment shall be made in accordance with the schedule of charges in **Exhibit A-1**. Invoices will be itemized and include hourly breakdown for all personnel and other charges.

B. Contractor may submit monthly or periodic statements requesting payment. Such request shall be based upon the amount and value of the work and services performed by Contractor under this Agreement except as otherwise supplemented or accompanied by such supporting data as may be required by the City.

1. All invoices, including Contractor's verified payment request, shall be submitted by Contractor to the City no later than the twenty-fourth (24th) day of each month for payment pursuant to the terms of this Agreement. In the event Contractor fails to submit any invoice on or before the twenty-fourth (24th) day of any given month, Contractor defers its right to payment pursuant to said late invoice until the twenty-fourth (24th) day of the following month.

2. Progress payments may be claimed on a monthly basis for reimbursable costs actually incurred to date as supported by detailed statements, including hourly breakdowns for all personnel and other charges. The amounts of all such monthly payments shall be paid within thirty (30) days after the timely receipt of invoice as provided by this Agreement.

C. The City has the right to ask for clarification on any Contractor invoice after receipt of the invoice by the City.

D. In the event payment for services rendered has not been made within forty-five (45) days from the receipt of the invoice for any uncontested billing, interest will accrue at the legal rate of interest. In the event payment has not been made within ninety (90) days from the receipt of the invoice for any uncontested billing, Contractor may, after giving seven (7) days written notice and without penalty or liability of any nature, suspend all work on all authorized services specified herein. In the event payment in full is not received within thirty (30) days of giving the seven (7) days written notice, Contractor may terminate this Agreement. Upon receipt of payment in full for services rendered, Contractor will continue with all authorized services.

E. Final payment shall be made within sixty (60) calendar days after all data and reports (which are suitable for reproduction and distribution by the City) required by this Agreement have been turned over to and approved by the City and upon receipt by the City of Contractor's certification that services required herein by Contractor have been fully completed in accordance with this Agreement and all data and reports for the Project.

V. COMMENCEMENT AND COMPLETION OF WORK

Contractor shall commence work upon the execution of this Agreement. This Agreement shall be completed by **January 12, 2022.**

VI. PROFESSIONAL RESPONSIBILITY

A. Contractor hereby represents that it is qualified to assume the responsibilities and render the services described herein and has all requisite corporate authority and professional licenses in good standing, required by law.

B. The work performed by Contractor shall be in accordance with generally accepted professional practices and the level of competency presently maintained by other practicing professional firms in the same or similar type of work in the applicable community.

C. Contractor shall be responsible for the professional quality, technical accuracy, timely completion, and coordination of all designs, drawings, specifications, reports, and other services furnished by Contractor under this Agreement. Contractor shall, without additional compensation, correct or resolve any errors or deficiencies in its designs, drawings, specifications, reports, and other services which fall below the standard of professional practice.

D. Approval by the City of drawings, designs, specifications, reports, and incidental work or materials furnished hereunder shall not in any way relieve Contractor of responsibility for technical adequacy of the work. Neither the City's review, approval, or acceptance of, nor payment for, any of the services shall be construed to operate as a waiver of any rights under this Agreement, and Contractor shall be and remain liable in accordance with applicable performance of any of the services furnished under this Agreement.

E. The rights and remedies of the City provided for under this Agreement are in addition to any other rights and remedies provided by law.

VII. COMPLIANCE WITH LAW

A. The work and services to be performed by Contractor hereunder shall be done in compliance with applicable laws, ordinances, rules, and regulations.

B. Illegal Aliens.

1. Certification. By entering into this Agreement, Contractor hereby certifies that, at the time of this certification, it does not knowingly employ or contract with an illegal alien who will perform work under the Agreement and that Contractor will participate in either the E-Verify Program administered by the United States Department of Homeland Security and Social Security Administration or the Department Program administered by the Colorado Department of Labor and Employment in order to confirm the employment eligibility of all employees who are newly hired for employment to perform work under the Agreement.

2. Prohibited Acts. Contractor shall not:

a. Knowingly employ or contract with an illegal alien to perform work under this Agreement; or

b. Enter into a contract with a subcontractor that fails to certify to Contractor that the subcontractor shall not knowingly employ or contract with an illegal alien to perform work under this Agreement.

3. Verification.

a. Contractor has confirmed the employment eligibility of all employees who are newly hired for employment to perform work under this Agreement through participation in either the E-Verify Program or the Department Program.

b. Contractor shall not use the E-Verify Program or the Department Program procedures to undertake pre-employment screening of job applicants while this Agreement is being performed.

c. If Contractor obtains actual knowledge that a subcontractor performing work under this Agreement knowingly employs or contracts with an illegal alien who is performing work under the Agreement, Contractor shall:

i. Notify the subcontractor and the City within three (3) days that Contractor has actual knowledge that the subcontractor is employing or contracting with an illegal alien who is performing work under the Agreement; and

ii. Terminate the subcontract with the subcontractor if within three (3) days of receiving the notice required pursuant to subparagraph (i) hereof, the subcontractor does not stop employing or contracting with the illegal alien who is performing work under the Agreement; except that Contractor shall not terminate the contract with the subcontractor if during such three (3) days the subcontractor provides information to establish that the subcontractor has not knowingly employed or contracted with an illegal alien who is performing work under the Agreement.

4. Duty to Comply with Investigations. Contractor shall comply with any reasonable request by the Colorado Department of Labor and Employment made in the course of an investigation conducted pursuant to C.R.S. § 8-17.5-102(5)(a) to ensure that Contractor is complying with the terms of this Agreement.

5. If Contractor does not currently employ any employees, Contractor shall sign the No Employee Affidavit attached hereto.

6. If Contractor wishes to verify the lawful presence of newly hired employees who perform work under the Agreement via the Department Program, Contractor shall sign the Department Program Affidavit attached hereto.

VIII. INDEMNIFICATION

A. INDEMNIFICATION – GENERAL: The City cannot and by this Agreement does not agree to indemnify, hold harmless, exonerate or assume the defense of the Contractor or any other person or entity whatsoever, for any purpose whatsoever. Provided that the claims, demands, suits, actions or proceedings ~~of any kind~~ are not the result of professional negligence, the Contractor, to the fullest extent permitted by law, shall defend, indemnify and hold harmless the City, its Council members, officials, officers, directors, agents and employees from any and all third party claims, demands, suits, actions or proceedings of any kind or nature whatsoever, including worker's compensation claims, ~~in any way resulting from or arising~~ to the extent caused from the services rendered by Contractor, its employees, agents or sub-contractors, or others for whom the Contractor is legally liable, under this Agreement; provided, however, that the Contractor need not indemnify or save harmless the City, its Council members, its officers, agents and employees from damages resulting from the negligence, errors or omissions of the Council members, officials, officers, directors, agents and employees.

B. INDEMNIFICATION FOR PROFESSIONAL NEGLIGENCE: The Contractor shall, to the fullest extent permitted by law, defend, indemnify and hold harmless the City, its Council members, and any of its officials, officers, directors, and employees from and against damages, liability, losses, costs and expenses, including reasonable attorney's fees, but only to the extent caused by ~~or arising out of~~ the negligent acts, errors or omissions of the Contractor, its employees, agents or subcontractors, or others for whom the Contractor is legally liable, in the performance of professional services under this Agreement. The Contractor is not obligated under this subparagraph VIII.B. to indemnify the City for the negligent acts, errors or omissions of the City, its Council members, or any of its officials, officers, directors, agents and employees.

C. INDEMNIFICATION – COSTS: Contractor shall, to the fullest extent permitted by law, defend, investigate, handle, respond to, and provide defense for and defend against, any such liability, claims or demands at the sole expense of Contractor or, at the option of the City, agrees to pay the City or reimburse the City for the defense costs incurred by the City in connection with any such liability, claims or demands. Contractor shall, to the fullest extent permitted by law, defend and bear all other costs and expenses related thereto, including court costs and attorney fees, whether or not any such liability, claims or demands alleged are groundless, false or fraudulent. If it is determined by the final judgment of a court of any competent jurisdiction that such injury, loss or damage was caused in whole or in part by the act, omission or other fault of the City, its Council members, officials, officers, directors, agents and employees, the City shall reimburse Contractor for the portion of the judgment attributable to such act, omission or other fault of the City, its Council members, officials, officers, directors, agents and employees.

IX. INSURANCE

A. The Contractor agrees to obtain and maintain during the life of the Agreement, a policy or policies of insurance against all liability, claims, demands and other obligations assumed by the Contractor pursuant to Section VIII above. Such insurance shall be in addition to any other insurance requirements imposed by the Agreement or by law. The Contractor shall not be relieved of any liability, claims, demands, or other obligations assumed pursuant to Section VIII above, by reason of its failure to obtain and maintain during the life of the Agreement insurance in sufficient amounts, durations, or types.

B. Contractor shall obtain and maintain during the life of the Agreement, and shall cause any subcontractor to obtain and maintain during the life of the Agreement, the minimum insurance coverages listed below. Such coverages shall be obtained and maintained with forms and insurers acceptable to the City. All coverages shall be continuously maintained to cover all liability, claims, demands and other obligations assumed by the Contractor pursuant to Section VIII above. In the case of any claims-made policy, the necessary retroactive dates and extended reporting periods shall be procured to maintain such continuous coverage.

C. Except to the extent arising from indemnification obligations, in no event shall either party be liable to the other for consequential, incidental, exemplary or other indirect damages (other than payment obligations). This limitation of liability shall apply regardless of notice of the potential for such damages and regardless of whether remaining available remedies fail of their intended purpose. Except to the extent arising from indemnification or obligations for payment for services, in no event shall the total aggregate liability of either party under this agreement exceed $2,000,000.

1. **Worker's Compensation Insurance** to cover obligations imposed by applicable law for any employee engaged in the performance of the work under the Agreement, and Employers Liability Insurance with minimum limits of six hundred thousand dollars ($600,000) each incident, one million dollars ($1,000,000) disease—policy limit, and one million dollars ($1,000,000) disease—each employee. Evidence of qualified self-insured status may be substituted for the worker's compensation requirements under this paragraph.

2. **Commercial general liability insurance** with minimum combined single limits of six hundred thousand dollars ($600,000) each occurrence and one million dollars ($1,000,000) general aggregate. The policy shall be applicable to all premises and operations. The policy shall include coverage for bodily injury broad form property damage (including completed operations), personal injury (including coverage for contractual and employee acts), blanket contractual products, and completed operations. This policy shall contain a severability of interests provision.

3. **Professional liability insurance** with minimum limits of six hundred, thousand dollars ($600,000) each claim and one million dollars ($1,000,000) general aggregate.

4. **The policy required by paragraph 2., above, shall be endorsed to include the City and the City's officers, employees, and Contractors as additional insureds**. The policy required in Paragraphs 1 and 2 above shall be primary insurance, and any insurance carried by the City, its officers, its employees, or its Contractors shall be excess and not contributory insurance to that provided by Contractor. No additional insured endorsement to the policy required by paragraph 1., above, shall contain any exclusion for bodily injury or property damage arising from completed operations. Contractor shall be solely responsible for any deductible losses under any policy required above.

5. The certificate of insurance provided for the City shall be completed by Contractor's insurance agent as evidence that policies providing the required coverages, conditions, and minimum limits are in full force and effect, and shall be reviewed and approved by the City prior to commencement of the Agreement. No other form of certificate shall be used. The certificate shall identify this Agreement and shall provide that the coverages afforded under the policies shall not be cancelled, terminated, or materially changed until at least thirty (30) days prior written notice has been given to the City. The completed certificate of insurance shall be sent to:

City of Black Hawk
P.O. Box 68
Black Hawk, Colorado 80422-0068
Attn: City Clerk

6. Failure on the part of Contractor to procure or maintain policies providing the required coverages, conditions, and minimum limits shall constitute a material breach of agreement upon which the City may immediately terminate this Agreement~~, or at its discretion, the City may procure or renew any such policy or any extended reporting period thereto and may pay any and all premiums in connection therewith, and all monies so paid by the City shall be repaid by Contractor to the City upon demand, or the City may offset the cost of the premiums against any monies due to Contractor from the City~~.

7. The City reserves the right to request and receive a certified copy of any policy and any endorsement thereto.

8. The parties hereto understand and agree that the City, its officers, and its employees, are relying on, and do not waive or intend to waive by any provision of this Agreement, the monetary limitations or any other rights, immunities, and protections provided by the Colorado Governmental Immunity Act, Colo. Rev. Stat. §24-10-114 et seq., 13 Colo. Rev. Stat., as from time to time amended, or otherwise available to the City, its officers, its employees, or agents. Contractor shall act as an agent of the City in performing the Services, and it is the intention of the parties that Contractor shall be entitled to sovereign immunity to the greatest extent permitted by law.

X. NON-ASSIGNABILITY

Neither this Agreement, nor any of the rights or obligations of the parties hereto, shall be assigned by either party without the written consent of the other. Notwithstanding the preceding, Contractor may assign this Agreement to its parent, subsidiaries or sister companies (Affiliates), or to any entity which acquires all or substantially all of the assets, membership interests or equity interests of Contractor without notice to the City provided that the entity receiving assignment of this Agreement agrees to perform all of the terms and conditions of this Agreement to be performed by Contractor from and after the assignment.

XI. TERMINATION

This Agreement shall terminate upon the City's providing Contractor with thirty (30) days advance written notice. In the event the Agreement is terminated by the City's issuance of said written notice of intent to terminate, the City shall pay Contractor for all work previously authorized and completed prior to the date of termination. If, however, Contractor has substantially or materially breached the standards and terms of this Agreement, the City shall have any remedy or right of set-off available at law and equity. If the Agreement is terminated for any reason ~~other than cause~~ prior to completion of the Project, any use of documents by the City thereafter shall be at the City's sole risk, unless otherwise consented to by Contractor. Contractor may terminate this Agreement, or any part of this Agreement upon ninety (90) days written notice to City, with or without cause and with no penalty or additional cost beyond the rates stated in this Agreement. In case of such termination, Contractor shall be entitled to receive payment for work completed up to and including the date of termination within thirty (30) days of the termination.

XII. VENUE

This Agreement shall be governed by the laws of the State of Colorado, and any legal action concerning the provisions hereof shall be brought in the County of Gilpin, State of Colorado.

XIII. INDEPENDENT CONTRACTOR

Contractor is an independent contractor. Notwithstanding any provision appearing in this Agreement, all personnel assigned by Contractor to perform work under the terms of this Agreement shall be, and remain at all times, employees or agents of Contractor for all purposes. Contractor shall make no representation that it is the employee of the City for any purpose.

XIV. NO WAIVER

Delays in enforcement or the waiver of any one or more defaults or breaches of this Agreement by the City shall not constitute a waiver of any of the other terms or obligations of this Agreement.

XV. NOTICE

Any notice or communication between Contractor and the City which may be required, or which may be given, under the terms of this Agreement, shall be in writing and shall be deemed to have been sufficiently given when directly presented or sent pre-paid, first class United States Mail, addressed as follows:

The City:

City of Black Hawk
P.O. Box 68
Black Hawk, Colorado 80422-0068
Attn: Cynthia L. Linker
Community Planning & Development Director

The Contractor:

SAFEbuilt, LLC
3755 Precision Drive #140
Loveland, Colorado 80538
Attn: Thomas P. Wilkas, CFO

XVI. ENTIRE AGREEMENT

This Agreement and the attached exhibits constitute the entire Agreement between Contractor and the City, superseding all prior oral or written communications. None of the provisions of this Agreement may be amended, modified, or changed, except as specified herein.

IN WITNESS WHEREOF, the parties hereto each herewith subscribe the same in duplicate.

CITY OF BLACK HAWK, COLORADO

By: _____
David D. Spellman, Mayor

ATTEST:

_____
Melissa A. Greiner, CMC
City Clerk

APPROVED AS TO FORM:

_____
Corey Y. Hoffmann, City Attorney

SAFEbuilt, LLC

By: _____

Thomas P. Wilkas

Its: **CFO**

STATE OF COLORADO)
) ss.
COUNTY OF Larimer)

The foregoing instrument was subscribed, sworn to, and acknowledged before me this 4 day of January, 2021, by **Thomas P. Wilkas** as the **CFO** of **SAFEbuilt, LLC.**

My commission expires: April 27, 2023

(S E A L)

AMANDA GILLIAM
NOTARY PUBLIC
STATE OF COLORADO
NOTARY ID 20154016455
MY COMMISSION EXPIRES APRIL 27, 2023

_____
Notary Public

PROSPECTIVE CONTRACTOR'S CERTIFICATE REGARDING EMPLOYING OR CONTRACTING WITH AN ILLEGAL ALIEN

FROM: **Thomas P. Wilkas, CFO**
SAFEbuilt, LLC
3755 Precision Drive #140, Loveland, CO 80538

TO: City of Black Hawk
P.O. Box 68
Black Hawk, Colorado 80422-0068

Project Name: **On-Call Professional Services Contract – Full-Service Building Department Consulting Services**

Bid Number: **N/A** Project Number: **N/A**

As a prospective Contractor for the above-identified bid, I (we) do hereby certify that, as of the date of this certification, I (we) do not knowingly employ or contract with an illegal alien who will perform work under the Agreement and that I (we) will confirm the employment eligibility of all employees who are newly hired for employment to perform work under the Agreement through participation in either the E-Verify Program administered by the United States Department of Homeland Security and Social Security Administration or the Department Program administered by the Colorado Department of Labor and Employment.

Executed this 4th day of January, 2021

Prospective Contractor **SAFEbuilt, LLC**

By: _____
Thomas P. Wilkas

Title: CFO
CFO

NO EMPLOYEE AFFIDAVIT

This Page Not Applicable

1. Check and complete one:

☐ I, _____, am a sole proprietor doing business as _____. I do not currently employ any individuals. Should I employ any individuals during the term of my Agreement with the City, I certify that I will comply with the lawful presence verification requirements outlined in that Agreement.

OR

☐ I, _____, am an owner/member/shareholder of _____, a _____[specify type of entity-*i.e.,* corporation, limited liability company], that does not currently employ any individuals. Should I employ any individuals during the term of my Agreement with the City, I certify that I will comply with the lawful presence verification requirements outlined in that Agreement.

2. Check one.

☐ I, _____, am a United States citizen or legal permanent resident.

The City must verify this statement by reviewing one of the following items:

- *A valid Colorado Driver's license or a Colorado identification card*
- *A United States military card or a military dependent's identification card*
- *A United States Coast Guard Merchant Mariner card*
- *A Native American tribal document or*
- *In the case of a resident of another state, the driver's license or state-issued identification card from the state of residence, if that state requires the applicant to prove lawful presence prior to the issuance of the identification card*
- *Any other documents or combination of documents listed in the City's "Acceptable Documents for Lawful Presence Verification" chart that prove both the contractor's citizenship/lawful presence and identity.*

OR

☐ I am otherwise lawfully present in the United States pursuant to federal law.

Contractor must verify this statement through the federal systematic alien verification of entitlement program, the "SAVE" program, and provide such verification to the City.

_____ _____

Signature Date

DEPARTMENT PROGRAM AFFIDAVIT

(To be completed if Contractor participates in the Department of Labor Lawful Presence Verification Program)

I, **Thomas P. Wilkas, CFO**, as a public contractor under contract with the City of Black Hawk (the "City"), hereby affirm that:

1. I have examined or will examine the legal work status of all employees who are newly hired for employment to perform work under this public contract for services ("Contract") with the Town within twenty (20) days after such hiring date;

2. I have retained or will retain file copies of all documents required by 8 U.S.C. § 1324a, which verify the employment eligibility and identity of newly hired employees who perform work under the Agreement; and

3. I have not and will not alter or falsify the identification documents for my newly hired employees who perform work under the Agreement.

TPS

Contractor Signature
Thomas P. Wilkas, CFO
SAFEbuilt, LLC

01/04/2021
Date

STATE OF COLORADO)
) ss.
COUNTY OF Larimer)

The foregoing instrument was subscribed, sworn to, and acknowledged before me this 4 day of January, 2021, by **Thomas P. Wilkas** as the **CFO** of **SAFEbuilt, LLC.**

My commission expires: April 27, 2023

(S E A L)

AMANDA GILLIAM
NOTARY PUBLIC
STATE OF COLORADO
NOTARY ID 20154016455
MY COMMISSION EXPIRES APRIL 27, 2023

Amanda Gilliam
Notary Public

ACCEPTABLE DOCUMENTS FOR LAWFUL PRESENCE VERIFICATION

Documents that Serve to Prove Citizenship/Lawful Presence and Identification:

- Colorado Driver's License or Identification Card
- Out of State drivers license from AL, AZ, AR, CA, CT, DE, DC, FL, GA, ID, IN, IA, KS, KY, LA, ME, MN, MS, MO, MT, NV, NH, NJ, NY, ND, OH, OK, PA, RI, SC, SD, VA, WV, WY
- A United States Military Card of a Military Dependent's Identification Card
- A United States Coast Guard or Merchant Mariner Card
- A Native American Tribal Document
- Certificate of Naturalization with Photograph
- Certificate of U.S. Citizenship with Photograph
- U.S. Passport (less than 5 years old)
- Northern Mariana Identification Card with Photograph

OR

Documents that Only Serve to Prove Citizenship/Lawful Presence:

- U.S. Birth Certificate
- Certification of Report of Birth from the Department of State
- Report of Birth Abroad of a U.S. Citizen
- U.S. Citizen Identification Card
- Final Adoption Decree
- Evidence of U.S. Civil Service Employment before June 1, 1976
- Statement Provided by U.S. Consular Officer Certifying Citizenship
- Religious Records Recorded in the 50 states, D.C., or a U.S. Territory Showing Birth Date or Child's Age and Location of Birth in the U.S.
- Early School Records
- Census Records
- Other Documents that Establish a U.S. Place of Birth or in Some Way Indicates U.S. Citizenship

AND

Documents that Serve to Prove Identification:

- A Driver's License or Identification Card Regardless of the State of Issuance
- School Identification Card with Photograph
- Identification Card Issued by Federal, State or Local Government
- A Driver's License Issued by a Canadian Government Authority

EXHIBIT A

SCOPE OF WORK - 2021

1. **PURPOSE:**
The City of Black Hawk requires a committed team of dedicated, trained, knowledgeable, certified, and licensed professionals to support the City by providing full-service all-inclusive building department services. These services include but are not limited to building official services, administrative support, building code services, code adoptions, compliance, interpretation and enforcement, plan reviews, and inspection services.

2. **SAFEBUILT PROVIDED LIST OF SERVICES:**
SAFEbuilt shall provide the following services to the City of Black Hawk using qualified International Code Council certified and State licensed professionals. SAFEbuilt representatives shall dress professionally and wear SAFEbuilt identification (badge/clothing), identifying them as an authorized Consultant of the City of Black Hawk.

SAFEbuilt shall provide their staff:

a. Vehicles, fuel, and vehicle maintenance;
b. Cell phones and IPads;
c. Insurance;
d. Salaries and benefits;
e. Professional appearance, attire, and badge;
f. Membership dues and certifications.

SAFEbuilt to provide Building Official Services to include but not limited to:

a. A SAFEbuilt representative shall be appointed as the designated Building Official for the City of Black Hawk by the City of Black Hawk City Manager. The City of Black Hawk grants the SAFEbuilt representative all rights and privileges, as established by Chapter 18 of the Black Hawk Municipal Code. SAFEbuilt and the City of Black Hawk mutually agree to any change in the Building Official.
b. SAFEbuilt shall provide the City of Black Hawk with current resumes and certifications for all SAFEbuilt staff assigned to the City of Black Hawk.
c. SAFEbuilt representative shall act as a technical advisor and resource for the City of Black Hawk staff, City of Black Hawk consultants, residential and business communities.
d. SAFEbuilt representative shall assist the City of Black Hawk staff, residential and business community through the complexities of the Municipal Code, International codes, Electrical Code, and amendments.
e. SAFEbuilt representative shall monitor changes to the International codes, Electrical code adopted by the State of Colorado, including state or local requirements.
f. SAFEbuilt representative shall make recommendations and advise the City of Black Hawk on adopting code regulations and how changes and amendments may impact projects in the City of Black Hawk.
g. SAFEbuilt representative shall perform quality control inspections on specific projects identified by the City of Black Hawk. Ensure materials and construction practices meet the City of Black Hawk construction standards and guidelines.

SAFEbuilt to provide Inspection Services:

a. SAFEbuilt shall provide certified and licensed combination inspectors to the City of Black Hawk. SAFEbuilt and the City of Black Hawk mutually agree to staff changes.
b. SAFEbuilt representatives shall perform consistent code compliant inspections to determine that construction complies with issued permits, approved plans, and currently adopted International and Electrical codes, code amendments, and Municipal code.
c. SAFEbuilt representatives shall read and interpret technical manuals, drawings, instructions, specifications as related to projects.
d. SAFEbuilt representatives shall notify the contractor of code violations with verbal dialogue and written inspection reports at the time of inspection. Cite all Municipal, International and, Electrical code sections that pertain to violations.
e. SAFEbuilt representatives shall perform re-inspection to verify the correction of violations.
f. SAFEbuilt representatives shall check and confirm all required special inspections are performed and reviewed for completeness. Provide "Reviewed" electronic file copy to the City of Black Hawk Development Services Coordinator.
g. SAFEbuilt representatives shall review testing data and reports for conformance to specifications. Provide "Reviewed" electronic file copy to the City of Black Hawk Development Services Coordinator.
h. SAFEbuilt representatives shall provide their Administrative Staff with a copy of inspection results, or SAFEbuilt representative shall result in the field, automatically informing contractors of inspection results. SAFEbuilt representatives shall have the ability to schedule inspections in the field.
i. SAFEbuilt representatives shall inform the City of Black Hawk Development Services Coordinator of any failed or problematic inspection results.
j. SAFEbuilt representatives shall provide onsite consultations to the residential/business community and contractors while performing inspections.
k. SAFEbuilt representatives shall issue stop-work notices for non-conforming activities – as needed.
l. SAFEbuilt representatives shall schedule all inspections via Innoprise by 4:00 p.m. the business day before the inspection date. SAFEbuilt representatives shall be available for inspections Monday-Friday from 8:00 a.m. – 5:00 p.m. (excluding SAFEbuilt and Black Hawk Municipal holidays).

SAFEbuilt to provide Plan Review Services:

a. SAFEbuilt representatives shall provide International Code Council certified and experienced plans examiners, commercial and residential.
b. SAFEbuilt representatives shall review building plans, calculations, and specifications.
c. SAFEbuilt representatives shall adhere to the City of Black Hawk Municipal Code and adopted International Codes, Electrical Code, and amendments.
d. SAFEbuilt representatives shall determine the type of construction, use, occupancy classification, and types of inspections required, including special inspections. The Plans Examiner shall include this information on the building inspection card.
e. SAFEbuilt representatives shall complete the review within established review cycles:
    1) A Minor project is a total of 15 business days (excluding Holidays), *10 days for review and comments,* and 5 days for the City of Black Hawk Development Services Coordinator or Studio Session designee to prepare plan review and distribute the report.
    2) A major project is a total of 30 business days (excluding Holidays), *25 days for review and comments,* and 5 days for the City of Black Hawk Development Services Coordinator or Studio Session designee to prepare plan review and distribute the report.
    3) Review Cycles are subject to change based on the City of Black Hawk City Manager and City Council.
f. SAFEbuilt representatives shall return one (1) set of electronically stamped finalized approved plans and all supporting documentation to the Development Services Coordinator.
g. SAFEbuilt representatives shall interpret legal requirements and recommend compliance procedures.
h. SAFEbuilt representatives shall address all issues by documented comments with applicable code sections.

Structural Engineering Reviews and Resources

a. SAFEbuilt shall provide a State licensed structural engineer.

Additional SAFEbuilt Responsibilities:

a. SAFEbuilt Colorado Operations Manager, Building Official, and Administrative staff shall meet regularly with the Community Planning and Development Director and Development Services Coordinator.
b. The Building Official and designated SAFEbuilt representatives shall attend weekly Development Review Committee (DRC) meetings.
c. SAFEbuilt representatives shall attend the City of Black Hawk City Council meetings as directed.
d. SAFEbuilt representatives and City of Black Hawk staff shall attend Owner/Architect/Contractor meetings of significant/major projects.
e. SAFEbuilt representatives and City of Black Hawk Fire Department staff shall jointly walk significant/major projects every week to identify code related issues.
f. SAFEbuilt representatives and City of Black Hawk staff shall work together to establish policies and procedures for tracking such items as, but not limited to, Requests for Information, Special Inspections, etc.

3. <u>CITY OF BLACK HAWK PROVIDED LIST OF SERVICES:</u>

a. Black Hawk shall provide SAFEbuilt representatives, Innoprise viewing rights access to permits, and editing access to inspections.
b. Black Hawk shall provide Innoprise access to SAFEbuilt representative to generate the City of Black Hawk's monthly invoice fees.
c. Black Hawk shall provide SAFEbuilt representatives access to the Innoprise Mobile Inspection Application.
d. Black Hawk Development Services Coordinator shall host all Blue Bean Revu studio sessions, producing and distributing an official Plan Review report.
e. Black Hawk Development Services Coordinator shall calculate permit fees.
f. Black Hawk shall provide electronically all relevant forms and documents required to complete project inspections.

EXHIBIT A-1

SCHEDULE OF CHARGES – 2021
SAFEBUILT LLC

Consultant fees, according to this Agreement, will be as follows:

2021 Service Fee Schedule	
New Permits Issued	
Building Permit Fee	70% of the fee collected by CoBH
Electrical Permit Fee	70% of the fee collected by CoBH
Building Plan Review Fee (Includes initial review with one (1) response comments)	70% of the fee collected by CoBH
Additional Building Plan Reviews and Response Comments (Review of previous approved / changes / additions / revisions)	$150.00 an hour
Structural Engineering Review Fee	Actual Costs
Re-Inspection Fee SAFEbuilt shall charge a re-inspection fee in the following instances: 1. The contractor schedules an inspection and is not ready when SAFEbuilt arrives. 2. The contractor schedules an inspection and provides an incorrect address. 3. The contractor schedules an inspection but is not available to walk with SAFEbuilt. 4. The contractor or homeowner disregards correction items listed from the previous inspection and schedules a re-inspection without making required corrections.	$150.00 an hour.
Inspections Outside of Normal Business Hours. Regular Business Hours are 8:00 a.m. – 5:00 p.m. – Monday-Friday	$200.00 an hour – four (4) hour minimum
Building Consulting / Miscellaneous Services (Includes all services not listed)	$150.00 an hour
Expert Witness/Court Testimony	Actual Costs
Attend Staff and Development Review Committee (DRC) meetings	No Charge
Miscellaneous: 1. Rates are all-inclusive – no separate billing for mileage or vehicle expenses. 2. SAFEbuilt shall not invoice contractors or homeowners directly. SAFEbuilt shall invoice the CoBH. 3. In the event of termination of this Agreement, SAFEbuilt agrees to complete any plan reviews and inspections paid in advance. 4. Fees from the currently adopted CoBH Fee Schedule may also apply.	

CERTIFICATES OF INSURANCE

CERTIFICATE OF LIABILITY INSURANCE

DATE (MM/DD/YYYY): 10/2/2020

THIS CERTIFICATE IS ISSUED AS A MATTER OF INFORMATION ONLY AND CONFERS NO RIGHTS UPON THE CERTIFICATE HOLDER. THIS CERTIFICATE DOES NOT AFFIRMATIVELY OR NEGATIVELY AMEND, EXTEND OR ALTER THE COVERAGE AFFORDED BY THE POLICIES BELOW. THIS CERTIFICATE OF INSURANCE DOES NOT CONSTITUTE A CONTRACT BETWEEN THE ISSUING INSURER(S), AUTHORIZED REPRESENTATIVE OR PRODUCER, AND THE CERTIFICATE HOLDER.

IMPORTANT: If the certificate holder is an ADDITIONAL INSURED, the policy(ies) must have ADDITIONAL INSURED provisions or be endorsed. If SUBROGATION IS WAIVED, subject to the terms and conditions of the policy, certain policies may require an endorsement. A statement on this certificate does not confer rights to the certificate holder in lieu of such endorsement(s).

PRODUCER RBN Insurance Services 303 E Wacker Dr Ste 650 Chicago IL 60601	**CONTACT NAME:** **PHONE (A/C, No, Ext):** 312-856-9400 **FAX (A/C, No):** 312-856-9425 **E-MAIL ADDRESS:** rdelich@rbninsurance.com
INSURED SAFELLC-01 SAFEbuilt Holding Company SAFEbuilt, LLC (See Attached) 3755 Precision Drive, Ste 140 Loveland CO 80538	**INSURER(S) AFFORDING COVERAGE** / **NAIC #** **INSURER A :** Hartford Fire Insurance Co. 19682 **INSURER B :** Hartford Casualty Insurance Co 29424 **INSURER C :** Navigators Insurance Company 42307 **INSURER D :** Twin City Fire Insurance Co. 29459 **INSURER E :** Great American E&S Ins. Co. 37532 **INSURER F :**

COVERAGES **CERTIFICATE NUMBER:** 1195233727 **REVISION NUMBER:**

THIS IS TO CERTIFY THAT THE POLICIES OF INSURANCE LISTED BELOW HAVE BEEN ISSUED TO THE INSURED NAMED ABOVE FOR THE POLICY PERIOD INDICATED. NOTWITHSTANDING ANY REQUIREMENT, TERM OR CONDITION OF ANY CONTRACT OR OTHER DOCUMENT WITH RESPECT TO WHICH THIS CERTIFICATE MAY BE ISSUED OR MAY PERTAIN, THE INSURANCE AFFORDED BY THE POLICIES DESCRIBED HEREIN IS SUBJECT TO ALL THE TERMS, EXCLUSIONS AND CONDITIONS OF SUCH POLICIES. LIMITS SHOWN MAY HAVE BEEN REDUCED BY PAID CLAIMS.

INSR LTR	TYPE OF INSURANCE	ADDL INSD	SUBR WVD	POLICY NUMBER	POLICY EFF (MM/DD/YYYY)	POLICY EXP (MM/DD/YYYY)	LIMITS	
A	X **COMMERCIAL GENERAL LIABILITY** CLAIMS-MADE X OCCUR GEN'L AGGREGATE LIMIT APPLIES PER: POLICY X PRO-JECT LOC OTHER:			83UENZV3951	10/3/2020	10/3/2021	EACH OCCURRENCE DAMAGE TO RENTED PREMISES (Ea occurrence) MED EXP (Any one person) PERSONAL & ADV INJURY GENERAL AGGREGATE PRODUCTS - COMP/OP AGG 	$ 1,000,000 $ 300,000 $ 10,000 $ 1,000,000 $ 2,000,000 $ 2,000,000 $
B	**AUTOMOBILE LIABILITY** X ANY AUTO OWNED AUTOS ONLY SCHEDULED AUTOS X HIRED AUTOS ONLY X NON-OWNED AUTOS ONLY			83UENPY9100	10/3/2020	10/3/2021	COMBINED SINGLE LIMIT (Ea accident) BODILY INJURY (Per person) BODILY INJURY (Per accident) PROPERTY DAMAGE (Per accident) 	$ 1,000,000 $ $ $ $
C	**UMBRELLA LIAB** X OCCUR X **EXCESS LIAB** CLAIMS-MADE DED X RETENTION $ 0			CH20EXC885600IV	10/3/2020	10/3/2021	EACH OCCURRENCE AGGREGATE 	$ 10,000,000 $ 10,000,000 $
D	**WORKERS COMPENSATION AND EMPLOYERS' LIABILITY** Y / N ANY PROPRIETOR/PARTNER/EXECUTIVE OFFICER/MEMBER EXCLUDED? N **(Mandatory in NH)** If yes, describe under DESCRIPTION OF OPERATIONS below	N / A		83WECE0623	5/12/2020	5/12/2021	X PER STATUTE OTH-ER E.L. EACH ACCIDENT E.L. DISEASE - EA EMPLOYEE E.L. DISEASE - POLICY LIMIT	 $ 1,000,000 $ 1,000,000 $ 1,000,000
E	Professional Liability			TER285-99-95	10/3/2020	10/3/2021	Each Claim/Aggregate	10,000,000

DESCRIPTION OF OPERATIONS / LOCATIONS / VEHICLES (ACORD 101, Additional Remarks Schedule, may be attached if more space is required)

The City of Black Hawk is an Additional Insured as respects General Liability on a primary and non-contributory basis as required by a written contract. General Liability and Workers Compensation Waivers of Subrogation in favor of the Additional Insured apply as required by a written contract.

CERTIFICATE HOLDER

City of Black Hawk
P. O. Box 68
Black Hawk CO 80422-0068

CANCELLATION

SHOULD ANY OF THE ABOVE DESCRIBED POLICIES BE CANCELLED BEFORE THE EXPIRATION DATE THEREOF, NOTICE WILL BE DELIVERED IN ACCORDANCE WITH THE POLICY PROVISIONS.

AUTHORIZED REPRESENTATIVE

© 1988-2015 ACORD CORPORATION. All rights reserved.

AGENCY CUSTOMER ID: SAFELLC-01 LNORTZ

LOC #: 0

ADDITIONAL REMARKS SCHEDULE

AGENCY		NAMED INSURED
RBN Insurance Services		SAFEbuilt Holding Company SAFEbuilt, LLC (See Attached) 3755 Precision Drive, Ste 140 Loveland, CO 80538
POLICY NUMBER		
SEE PAGE 1		
CARRIER	NAIC CODE	EFFECTIVE DATE: SEE PAGE 1
SEE PAGE 1	SEE P 1	

ADDITIONAL REMARKS

THIS ADDITIONAL REMARKS FORM IS A SCHEDULE TO ACORD FORM,

FORM NUMBER: ACORD 25 FORM TITLE: Certificate of Liability Insurance

Named Insureds (continued):
SAFEbuilt Arizona, LLC
SAFEbuilt Carolinas, LLC
SAFEbuilt Colorado, LLC
SAFEbuilt Florida, LLC
SAFEbuilt Georgia, LLC
SAFEbuilt Illinois, LLC
SAFEbuilt Louisiana, LLC
SAFEbuilt New Mexico, LLC
SAFEbuilt Ohio, LLC
SAFEbuilt Oregon, LLC
SAFEbuilt Texas, LLC
SAFEbuilt Michigan, LLC
SAFEbuilt Washington, LLC
SAFEbuilt Wisconsin, LLC
LSL Planning, LLC
Meritage Systems, Inc.

If required by a written contract, the following forms apply on a blanket basis.

General Liability:
Form HG0001 09 16 Additional Insureds; Primary and Non-contributory; Waiver of Transfer of Rights of Recovery Against Others to Us

Auto Liability:
HA9916 0312 Commercial Automobile Broad Form Endorsement includes Additional Insureds and Waiver of Subrogation

Workers Compensation:
WC 00 03 13 Waiver Of Our Right to Recover from Others

© 2008 ACORD CORPORATION. All rights reserved.
The ACORD name and logo are registered marks of ACORD

CITY OF BLACK HAWK, COLORADO

AGREEMENT FOR PROFESSIONAL SERVICES
WEECYCLE ENVIRONMENTAL CONSULTING, INC

RESOLUTION 4-2021
JANUARY 13, 2021

AGREEMENT FOR PROFESSIONAL SERVICES

THIS AGREEMENT is made and entered into this **1st day of January, 2021** by and between the **CITY OF BLACK HAWK**, State of Colorado, a Colorado municipal corporation (hereinafter referred to as the "City") and **WEECYCLE ENVIRONMENTAL CONSULTING, INC.** hereinafter referred to as "Contractor").

RECITALS:

A. The City requires **on-call environmental consulting and abatement services** (the "Project").

B. Contractor has held itself out to the City as having the requisite expertise and experience to perform the required work for the Project.

NOW, THEREFORE, it is hereby agreed for the consideration hereinafter set forth, that Contractor shall provide to the City **on-call environmental consulting and abatement services**.

I. SCOPE OF SERVICES

Contractor shall complete the scope of services as described in **Exhibit A** attached hereto and incorporated herein by this reference. Contractor shall furnish all labor and materials to perform the work and services required for the complete and prompt execution and performance of all duties, obligations, and responsibilities for the Project.

II. THE CITY'S OBLIGATIONS/CONFIDENTIALITY

The City shall provide Contractor with reports and such other data as may be available to the City and reasonably required by Contractor to perform hereunder. No project information shall be disclosed by Contractor to third parties without the prior written consent of the City or pursuant to a lawful court order directing such disclosure. All documents provided by the City to Contractor shall be returned to the City. Contractor is authorized by the City to retain copies of such data and materials at Contractor's expense.

III. OWNERSHIP OF WORK PRODUCT

The City acknowledges that Contractor's documents produced under this Agreement are instruments of professional services. Nevertheless, upon payment to Contractor pursuant to this Agreement, all work, data, drawings, designs, plans, reports, computer programs (non-proprietary), computer input and output, analyses, tests, maps, surveys, or any other materials developed for this Project are, and shall be, the sole and exclusive property of the City. However, any reuse of the documents by the City without prior written authorization by Contractor other than for the specific intended purpose of this Agreement will be at the City's sole risk. Contractor will provide the City with a ten (10) day written notice prior to disposal of Project documents it has retained, during which time the City may take physical possession of same at the storage site.

IV. COMPENSATION

A. Compensation shall not exceed **amounts as described in Exhibit A-1 for the work described in Exhibit A**. Payment shall be made in accordance with the schedule of charges in **Exhibit A-1**. Invoices will be itemized and include hourly breakdown for all personnel and other charges.

B. Contractor may submit monthly or periodic statements requesting payment. Such request shall be based upon the amount and value of the work and services performed by Contractor under this Agreement except as otherwise supplemented or accompanied by such supporting data as may be required by the City.

1. All invoices, including Contractor's verified payment request, shall be submitted by Contractor to the City no later than the twenty-fourth (24th) day of each month for payment pursuant to the terms of this Agreement. In the event Contractor fails to submit any invoice on or before the twenty-fourth (24th) day of any given month, Contractor defers its right to payment pursuant to said late invoice until the twenty-fourth (24th) day of the following month.

2. Progress payments may be claimed on a monthly basis for reimbursable costs actually incurred to date as supported by detailed statements, including hourly breakdowns for all personnel and other charges. The amounts of all such monthly payments shall be paid within thirty (30) days after the timely receipt of invoice as provided by this Agreement.

C. The City has the right to ask for clarification on any Contractor invoice after receipt of the invoice by the City.

D. In the event payment for services rendered has not been made within forty-five (45) days from the receipt of the invoice for any uncontested billing, interest will accrue at the legal rate of interest. In the event payment has not been made within ninety (90) days from the receipt of the invoice for any uncontested billing, Contractor may, after giving seven (7) days written notice and without penalty or liability of any nature, suspend all work on all authorized services specified herein. In the event payment in full is not received within thirty (30) days of giving the seven (7) days written notice, Contractor may terminate this Agreement. Upon receipt of payment in full for services rendered, Contractor will continue with all authorized services.

E. Final payment shall be made within sixty (60) calendar days after all data and reports (which are suitable for reproduction and distribution by the City) required by this Agreement have been turned over to and approved by the City and upon receipt by the City of Contractor's certification that services required herein by Contractor have been fully completed in accordance with this Agreement and all data and reports for the Project.

V. COMMENCEMENT AND COMPLETION OF WORK

Contractor shall commence work upon the execution of this Agreement. This Agreement shall be completed by **January 12, 2022.**

VI. PROFESSIONAL RESPONSIBILITY

A. Contractor hereby represents that it is qualified to assume the responsibilities and render the services described herein and has all requisite corporate authority and professional licenses in good standing, required by law.

B. The work performed by Contractor shall be in accordance with generally accepted professional practices and the level of competency presently maintained by other practicing professional firms in the same or similar type of work in the applicable community.

C. Contractor shall be responsible for the professional quality, technical accuracy, timely completion, and coordination of all designs, drawings, specifications, reports, and other services furnished by Contractor under this Agreement. Contractor shall, without additional compensation, correct or resolve any errors or deficiencies in its designs, drawings, specifications, reports, and other services which fall below the standard of professional practice.

D. Approval by the City of drawings, designs, specifications, reports, and incidental work or materials furnished hereunder shall not in any way relieve Contractor of responsibility for technical adequacy of the work. Neither the City's review, approval, or acceptance of, nor payment for, any of the services shall be construed to operate as a waiver of any rights under this Agreement, and Contractor shall be and remain liable in accordance with applicable performance of any of the services furnished under this Agreement.

E. The rights and remedies of the City provided for under this Agreement are in addition to any other rights and remedies provided by law.

VII. COMPLIANCE WITH LAW

A. The work and services to be performed by Contractor hereunder shall be done in compliance with applicable laws, ordinances, rules, and regulations.

B. Illegal Aliens.

1. Certification. By entering into this Agreement, Contractor hereby certifies that, at the time of this certification, it does not knowingly employ or contract with an illegal alien who will perform work under the Agreement and that Contractor will participate in either the E-Verify Program administered by the United States Department of Homeland Security and Social Security Administration or the Department Program administered by the Colorado Department of Labor and Employment in order to confirm the employment eligibility of all employees who are newly hired for employment to perform work under the Agreement.

2. Prohibited Acts. Contractor shall not:

a. Knowingly employ or contract with an illegal alien to perform work under this Agreement; or

b. Enter into a contract with a subcontractor that fails to certify to Contractor that the subcontractor shall not knowingly employ or contract with an illegal alien to perform work under this Agreement.

3. Verification.

a. Contractor has confirmed the employment eligibility of all employees who are newly hired for employment to perform work under this Agreement through participation in either the E-Verify Program or the Department Program.

b. Contractor shall not use the E-Verify Program or the Department Program procedures to undertake pre-employment screening of job applicants while this Agreement is being performed.

c. If Contractor obtains actual knowledge that a subcontractor performing work under this Agreement knowingly employs or contracts with an illegal alien who is performing work under the Agreement, Contractor shall:

i. Notify the subcontractor and the City within three (3) days that Contractor has actual knowledge that the subcontractor is employing or contracting with an illegal alien who is performing work under the Agreement; and

ii. Terminate the subcontract with the subcontractor if within three (3) days of receiving the notice required pursuant to subparagraph (i) hereof, the subcontractor does not stop employing or contracting with the illegal alien who is performing work under the Agreement; except that Contractor shall not terminate the contract with the subcontractor if during such three (3) days the subcontractor provides information to establish that the subcontractor has not knowingly employed or contracted with an illegal alien who is performing work under the Agreement.

4. Duty to Comply with Investigations. Contractor shall comply with any reasonable request by the Colorado Department of Labor and Employment made in the course of an investigation conducted pursuant to C.R.S. § 8-17.5-102(5)(a) to ensure that Contractor is complying with the terms of this Agreement.

5. If Contractor does not currently employ any employees, Contractor shall sign the No Employee Affidavit attached hereto.

6. If Contractor wishes to verify the lawful presence of newly hired employees who perform work under the Agreement via the Department Program, Contractor shall sign the Department Program Affidavit attached hereto.

VIII. INDEMNIFICATION

A. INDEMNIFICATION – GENERAL: The City cannot and by this Agreement does not agree to indemnify, hold harmless, exonerate or assume the defense of the Contractor or any other person or entity whatsoever, for any purpose whatsoever. Provided that the claims, demands, suits, actions or proceedings of any kind are not the result of professional negligence, the Contractor, to the fullest extent permitted by law, shall defend, indemnify and hold harmless the City, its Council members, officials, officers, directors, agents and employees from any and all claims, demands, suits, actions or proceedings of any kind or nature whatsoever, including worker's compensation claims, in any way resulting from or arising from the services rendered by Contractor, its employees, agents or sub-contractors, or others for whom the Contractor is legally liable, under this Agreement; provided, however, that the Contractor need not indemnify or save harmless the City, its Council members, its officers, agents and employees from damages resulting from the negligence of the Council members, officials, officers, directors, agents and employees.

B. INDEMNIFICATION FOR PROFESSIONAL NEGLIGENCE: The Contractor shall, to the fullest extent permitted by law, defend, indemnify and hold harmless the City, its Council members, and any of its officials, officers, directors, and employees from and against damages, liability, losses, costs and expenses, including reasonable attorney's fees, but only to the extent caused by or arising out of the negligent acts, errors or omissions of the Contractor, its employees, agents or subcontractors, or others for whom the Contractor is legally liable, in the performance of professional services under this Agreement. The Contractor is not obligated under this subparagraph VIII.B. to indemnify the City for the negligent acts of the City, its Council members, or any of its officials, officers, directors, agents and employees.

C. INDEMNIFICATION – COSTS: Contractor shall, to the fullest extent permitted by law, defend, investigate, handle, respond to, and provide defense for and defend against, any such liability, claims or demands at the sole expense of Contractor or, at the option of the City, agrees to pay the City or reimburse the City for the defense costs incurred by the City in connection with any such liability, claims or demands. Contractor shall, to the fullest extent permitted by law, defend and bear all other costs and expenses related thereto, including court costs and attorney fees, whether or not any such liability, claims or demands alleged are groundless, false or fraudulent. If it is determined by the final judgment of a court of any competent jurisdiction that such injury, loss or damage was caused in whole or in part by the act, omission or other fault of the City, its Council members, officials, officers, directors, agents and employees, the City shall reimburse Contractor for the portion of the judgment attributable to such act, omission or other fault of the City, its Council members, officials, officers, directors, agents and employees.

IX. INSURANCE

A. The Contractor agrees to obtain and maintain during the life of the Agreement, a policy or policies of insurance against all liability, claims, demands and other obligations assumed by the Contractor pursuant to Section VIII above. Such insurance shall be in addition to any other insurance requirements imposed by the Agreement or by law. The Contractor shall not be relieved of any liability, claims, demands, or other obligations assumed pursuant to Section VIII above, by reason of its failure to obtain and maintain during the life of the Agreement insurance in sufficient amounts, durations, or types.

B. Contractor shall obtain and maintain during the life of the Agreement, and shall cause any subcontractor to obtain and maintain during the life of the Agreement, the minimum insurance coverages listed below. Such coverages shall be obtained and maintained with forms and insurers acceptable to the City. All coverages shall be continuously maintained to cover all liability, claims, demands and other obligations assumed by the Contractor pursuant to Section VIII above. In the case of any claims-made policy, the necessary retroactive dates and extended reporting periods shall be procured to maintain such continuous coverage.

1. **Worker's Compensation Insurance** to cover obligations imposed by applicable law for any employee engaged in the performance of the work under the Agreement, and Employers Liability Insurance with minimum limits of six hundred thousand dollars ($600,000) each incident, one million dollars ($1,000,000) disease—policy limit, and one million dollars ($1,000,000) disease—each employee. Evidence of qualified self-insured status may be substituted for the worker's compensation requirements under this paragraph.

2. **Commercial general liability insurance** with minimum combined single limits of six hundred thousand dollars ($600,000) each occurrence and one million dollars ($1,000,000) general aggregate. The policy shall be applicable to all premises and operations. The policy shall include coverage for bodily injury broad form property damage (including completed operations), personal injury (including coverage for contractual and employee acts), blanket contractual products, and completed operations. This policy shall contain a severability of interests provision.

3. **Professional liability insurance** with minimum limits of six hundred, thousand dollars ($600,000) each claim and one million dollars ($1,000,000) general aggregate.

4. **The policy required by paragraph 2., above, shall be endorsed to include the City and the City's officers, employees, and Contractors as additional insureds**. The policy required in Paragraphs 1 and 2 above shall be primary insurance, and any insurance carried by the City, its officers, its employees, or its Contractors shall be excess and not contributory insurance to that provided by Contractor. No additional insured endorsement to the policy required by paragraph 1., above, shall contain any exclusion for bodily injury or property damage arising from completed operations. Contractor shall be solely responsible for any deductible losses under any policy required above.

5. The certificate of insurance provided for the City shall be completed by Contractor's insurance agent as evidence that policies providing the required coverages, conditions, and minimum limits are in full force and effect, and shall be reviewed and approved by the City prior to commencement of the Agreement. No other form of certificate shall be used. The certificate shall identify this Agreement and shall provide that the coverages afforded under the policies shall not be cancelled, terminated, or materially changed until at least thirty (30) days prior written notice has been given to the City. The completed certificate of insurance shall be sent to:

City of Black Hawk
P.O. Box 68
Black Hawk, Colorado 80422-0068
Attn: City Clerk

6. Failure on the part of Contractor to procure or maintain policies providing the required coverages, conditions, and minimum limits shall constitute a material breach of agreement upon which the City may immediately terminate this Agreement, or at its discretion, the City may procure or renew any such policy or any extended reporting period thereto and may pay any and all premiums in connection therewith, and all monies so paid by the City shall be repaid by Contractor to the City upon demand, or the City may offset the cost of the premiums against any monies due to Contractor from the City.

7. The City reserves the right to request and receive a certified copy of any policy and any endorsement thereto.

8. The parties hereto understand and agree that the City, its officers, and its employees, are relying on, and do not waive or intend to waive by any provision of this Agreement, the monetary limitations or any other rights, immunities, and protections provided by the Colorado Governmental Immunity Act, Colo. Rev. Stat. §24-10-114 et seq., 13 Colo. Rev. Stat., as from time to time amended, or otherwise available to the City, its officers, its employees, or agents.

X. NON-ASSIGNABILITY

Neither this Agreement, nor any of the rights or obligations of the parties hereto, shall be assigned by either party without the written consent of the other.

XI. TERMINATION

This Agreement shall terminate upon the City's providing Contractor with thirty (30) days advance written notice. In the event the Agreement is terminated by the City's issuance of said written notice of intent to terminate, the City shall pay Contractor for all work previously authorized and completed prior to the date of termination. If, however, Contractor has substantially or materially breached the standards and terms of this Agreement, the City shall have any remedy or right of set-off available at law and equity. If the Agreement is terminated for any reason other than cause prior to completion of the Project, any use of documents by the City thereafter shall be at the City's sole risk, unless otherwise consented to by Contractor.

XII. VENUE

This Agreement shall be governed by the laws of the State of Colorado, and any legal action concerning the provisions hereof shall be brought in the County of Gilpin, State of Colorado.

XIII. INDEPENDENT CONTRACTOR

Contractor is an independent contractor. Notwithstanding any provision appearing in this Agreement, all personnel assigned by Contractor to perform work under the terms of this Agreement shall be, and remain at all times, employees or agents of Contractor for all purposes. Contractor shall make no representation that it is the employee of the City for any purpose.

XIV. NO WAIVER

Delays in enforcement or the waiver of any one or more defaults or breaches of this Agreement by the City shall not constitute a waiver of any of the other terms or obligations of this Agreement.

XV. NOTICE

Any notice or communication between Contractor and the City which may be required, or which may be given, under the terms of this Agreement, shall be in writing and shall be deemed to have been sufficiently given when directly presented or sent pre-paid, first class United States Mail, addressed as follows:

The City:

City of Black Hawk
P.O. Box 68
Black Hawk, Colorado 80422-0068
Attn: Cynthia Linker
Community Planning & Development Director

The Contractor:

Weecycle Environmental Consulting, Inc.
1208 Commerce Court, Suite 5B
Lafayette, Colorado 80026
Attn: Judith E. Sawitsky, President

XVI. ENTIRE AGREEMENT

This Agreement and the attached exhibits constitute the entire Agreement between Contractor and the City, superseding all prior oral or written communications. None of the provisions of this Agreement may be amended, modified, or changed, except as specified herein.

IN WITNESS WHEREOF, the parties hereto each herewith subscribe the same in duplicate.

CITY OF BLACK HAWK, COLORADO

By: _____
David D. Spellman, Mayor

ATTEST:

_____
Melissa A. Greiner, CMC
City Clerk

APPROVED AS TO FORM:

_____
Corey Y. Hoffmann, City Attorney

Weecycle Environmental Consulting, Inc.

By: Judith E. Sawitsky
Judith E. Sawitsky
Its: **President**

STATE OF COLORADO)
) ss.
COUNTY OF BOULDER)

The foregoing instrument was subscribed, sworn to, and acknowledged before me this 29th day of December, 2020, by **Judith E. Sawitsky as the President of Weecycle Environmental Consulting, Inc.**

My commission expires: Aug 24, 2022

(S E A L)

KRISTA CHILCOTE
NOTARY PUBLIC - STATE OF COLORADO
NOTARY ID 20184034112
MY COMMISSION EXPIRES AUG 24, 2022

Krista Chilcote
Notary Public

PROSPECTIVE CONTRACTOR'S CERTIFICATE REGARDING EMPLOYING OR CONTRACTING WITH AN ILLEGAL ALIEN

FROM: **WEECYCLE ENVIRONMENTAL CONSULTING, INC.**

TO: **City of Black Hawk**
P.O. Box 68
Black Hawk, Colorado 80422-0068

Project Name:
On-Call Environmental Consulting and Abatement Services

Bid Number: **N/A** Project Number: **N/A**

As a prospective Contractor for the above-identified bid, I (we) do hereby certify that, as of the date of this certification, I (we) do not knowingly employ or contract with an illegal alien who will perform work under the Agreement and that I (we) will confirm the employment eligibility of all employees who are newly hired for employment to perform work under the Agreement through participation in either the E-Verify Program administered by the United States Department of Homeland Security and Social Security Administration or the Department Program administered by the Colorado Department of Labor and Employment.

Executed this 29th day of December, 2020

Prospective Contractor: **Weecycle Environmental Consulting, Inc.**

By: Judith E. Sawitsky
Judith E. Sawitsky

Title: **President**

NO EMPLOYEE AFFIDAVIT

This Page Not Applicable

1. Check and complete one:

☐ I, _____, am a sole proprietor doing business as _____. I do not currently employ any individuals. Should I employ any individuals during the term of my Agreement with the City, I certify that I will comply with the lawful presence verification requirements outlined in that Agreement.

OR

☐ I, _____, am an owner/member/shareholder of _____, a _____[specify type of entity-*i.e.*, corporation, limited liability company], that does not currently employ any individuals. Should I employ any individuals during the term of my Agreement with the City, I certify that I will comply with the lawful presence verification requirements outlined in that Agreement.

2. Check one.

☐ I, _____, am a United States citizen or legal permanent resident.

The City must verify this statement by reviewing one of the following items:

- *A valid Colorado Driver's license or a Colorado identification card*
- *A United States military card or a military dependent's identification card*
- *A United States Coast Guard Merchant Mariner card*
- *A Native American tribal document or*
- *In the case of a resident of another state, the driver's license or state-issued identification card from the state of residence, if that state requires the applicant to prove lawful presence prior to the issuance of the identification card*
- *Any other documents or combination of documents listed in the City's "Acceptable Documents for Lawful Presence Verification" chart that prove both the contractor's citizenship/lawful presence and identity.*

OR

☐ I am otherwise lawfully present in the United States pursuant to federal law.

Contractor must verify this statement through the federal systematic alien verification of entitlement program, the "SAVE" program, and provide such verification to the City.

_____ _____

Signature Date

DEPARTMENT PROGRAM AFFIDAVIT

(To be completed if Contractor participates in the Department of Labor Lawful Presence Verification Program)

I, **Judith E. Sawitsky of Weecycle Environmental Consulting, Inc.**, as a public contractor under contract with the City of Black Hawk (the "City"), hereby affirm that:

1. I have examined or will examine the legal work status of all employees who are newly hired for employment to perform work under this public contract for services ("Contract") with the Town within twenty (20) days after such hiring date;

2. I have retained or will retain file copies of all documents required by 8 U.S.C. § 1324a, which verify the employment eligibility and identity of newly hired employees who perform work under the Agreement; and

3. I have not and will not alter or falsify the identification documents for my newly hired employees who perform work under the Agreement.

Judith E. Sawitsky
Contractor Signature

12/29/20
Date

Judith E. Sawitsky
Weecycle Environmental Consulting, Inc.

STATE OF COLORADO)
) ss.
COUNTY OF BOULDER)

The foregoing instrument was subscribed, sworn to, and acknowledged before me this 29th day of December, 2020, by **Judith E. Sawitsky as the President of Weecycle Environmental Consulting, Inc.**

My commission expires: Aug. 24, 2022

(S E A L)

KRISTA CHILCOTE
NOTARY PUBLIC - STATE OF COLORADO
NOTARY ID 20184034112
MY COMMISSION EXPIRES AUG 24, 2022

Krista Chilcote
Notary Public

ACCEPTABLE DOCUMENTS FOR LAWFUL PRESENCE VERIFICATION

Documents that Serve to Prove Citizenship/Lawful Presence and Identification:

- Colorado Driver's License or Identification Card
- Out of State drivers license from: AL, AZ, AR, CA, CT, DE, DC, FL, GA, ID, IN, IA, KS, KY, LA, ME, MN, MS, MO, MT, NV, NH, NJ, NY, ND, OH, OK, PA, RI, SC, SD, VA, WV, WY
- A United States Military Card of a Military Dependent's Identification Card
- A United States Coast Guard or Merchant Mariner Card
- A Native American Tribal Document
- Certificate of Naturalization with Photograph
- Certificate of U.S. Citizenship with Photograph
- U.S. Passport (less than 5 years old)
- Northern Mariana Identification Card with Photograph

OR

Documents that Only Serve to Prove Citizenship/Lawful Presence:

- U.S. Birth Certificate
- Certification of Report of Birth from Department of State
- Report of Birth Abroad of a U.S. Citizen
- U.S. Citizen Identification Card
- Final Adoption Decree
- Evidence of U.S. Civil Service Employment before June 1, 1976
- Statement Provided by U.S. Consular Officer Certifying Citizenship
- Religious Records Recorded in the 50 states, D.C., or a U.S. Territory Showing Birth Date or Child's Age and Location of Birth in U.S.
- Early School Records
- Census Records
- Other Documents that Establish a U.S. Place of Birth or in Some Way Indicates U.S. Citizenship

AND

Documents that Serve to Prove Identification:

- A Driver's License or Identification Card Regardless of the State of Issuance
- School Identification Card with Photograph
- Identification Card Issued by Federal, State or Local Government
- A Driver's License Issued by a Canadian Government Authority

EXHIBIT A

2021 - SCOPE OF SERVICES
WEECYCLE ENVIRONMENTAL CONSULTING, INC.

Services and responsibilities may include, but not necessarily be limited to, the following:

1. Asbestos Inspection, Testing, Oversight, Project Management, and Worker Certification Verification.
2. Mold / Indoor Air Quality Inspection, Testing, Oversight, Project Management, and Worker Certification Verification.
3. Lead-Based Paint Inspection, Testing, Oversight, Project Management, and Worker Certification Verification.
4. Radon Air Monitoring Inspection, Testing, Oversight, Project Management, and Worker Certification Verification
5. Hazardous Waste Removal.
6. Advise Black Hawk City Staff of current environmental laws and the development and implementation of new technologies.

The **City of Black Hawk** shall provide a **Scope of Work** to **Weecycle Environmental Consulting, Inc.** on a project-by-project basis.

Weecycle Environmental Consulting, Inc. shall provide a quote based on the attached **Schedule of Charges - Exhibit A-1** and **Scope of Work** provided by the **City of Black Hawk** on a project-by-project basis.

EXHIBIT A-1
2021 - SCHEDULE OF CHARGES
WEECYCLE ENVIRONMENTAL CONSULTING, INC.

BILLING RATES

CATEGORY	PER HOUR
Project Manager	$ 90.00
Geologist	$115.00
Environmental Scientist	$ 80.00
Senior Technician	$ 50.00
Environmental Technician	$ 45.00
Lead Inspector/Lead Risk Assessor	$ 80.00
Lead Supervisor	$ 80.00
Asbestos Project Designer	$ 90.00
Asbestos Project Manager	$ 90.00
Asbestos Inspector	$ 80.00
Air Monitoring Specialist	$ 60.00
Drafting	$ 65.00
Document preparation/Word Processing/Clerical	$ 40.00

LEAD BASED PAINT (LBP) SERVICES	PER HOUR
Lead Survey + Samples	$395.00/hour
Lead Hazard Screen	$225.00/hour
Risk Assessment	$325.00/hour
Pre-renovation Testing	$225.00/hour

ASBESTOS SERVICES	PER DAY
Asbestos Survey + Samples	$475.00/day
Daily Rate – Project Over-Site	$600.00/day
Daily Rate – (Set & Collect)	$350.00/day
Final Visual Inspection & Air Monitoring Clearances	$400.00/day
Weekend Rate	$500.00/day
Out of Town Rate	$600.00/day

ENVIRONMENTAL ASSESSMENTS	PER ITEM
Phase I Environmental Assessments	$1400 - $1800/per site
Phase II Environmental Assessments	$95.00/per hour
Wetland/NEPA Compliance	$350 - $500/per site

LABORATORY	PER SAMPLE
Lead	
Wipe/Soil Samples (Lead)	
6 hr rush	$30.00/sample
24 hr	$22.00/sample
Bulk Chip Samples (Lead)	
24 hr	$22.00/sample
Asbestos	
PCM Analysis Asbestos	$10.00/sample
Bulk Asbestos (PLM)	
2 hr rush	$32.00/sample
24 hr	$22.00/sample
3-5 day	$12.00/sample
Point Count	
6 hours	$65.00/sample
24 hr	$50.00/sample
3 Day	$30.00/sample

INDOOR AIR QUALITY	
Bulk Samples	$50.00/sample
Air-O-Cell	$55.00/sample

SAFETY GEAR	PER PERSON & PER DAY
Level A	$500.00/per day
Level B	$250.00/per day
Level C	$ 50.00/per day
Level D	$ 25.00/per day

TRAVEL	PER PERSON & PER ITEM
Car Mileage	Current IRS Rate/mile
Truck & Equipment Trailer	$175/100 mile roundtrip
Travel	$ 40.00/hour

FIELD INSTRUMENTS	PER DAY	PER WEEK
Photo Ionization Detector	$ 85.00	$260.00
PH/Temp Meter	$ 30.00	$ 80.00
Conductivity/pH/Temp Meter	$ 57.00	$140.00
Water Level Indicator	$ 35.00	$ 92.00
Peristaltic Pump	$ 40.00	$115.00
Submersible Pump	$235.00	$520.00
Generator	$ 86.00	$230.00
Radiation Detector	$ 45.00	$155.00

OTHER EXPENSES	PER ITEM
Miscellaneous Expenses	Actual Cost + 10%
Project Supplies	$ 35.00/project
Laboratory Analysis (not listed)	Cost + 10%
Mileage	Current IRS Rate/mile
Camera	$ 10.00/day
Cell Phone	$ 10.00/day
Black & White Copies	$ 0.10/page
Color Printing	$ 0.75/page
Per Diem	$ 65.00 - $125.00 (Geographically Dependent)

CERTIFICATES OF INSURANCE

CERTIFICATE OF LIABILITY INSURANCE

DATE (MM/DD/YYYY): 1/5/2021

THIS CERTIFICATE IS ISSUED AS A MATTER OF INFORMATION ONLY AND CONFERS NO RIGHTS UPON THE CERTIFICATE HOLDER. THIS CERTIFICATE DOES NOT AFFIRMATIVELY OR NEGATIVELY AMEND, EXTEND OR ALTER THE COVERAGE AFFORDED BY THE POLICIES BELOW. THIS CERTIFICATE OF INSURANCE DOES NOT CONSTITUTE A CONTRACT BETWEEN THE ISSUING INSURER(S), AUTHORIZED REPRESENTATIVE OR PRODUCER, AND THE CERTIFICATE HOLDER.

IMPORTANT: If the certificate holder is an ADDITIONAL INSURED, the policy(ies) must be endorsed. If SUBROGATION IS WAIVED, subject to the terms and conditions of the policy, certain policies may require an endorsement. A statement on this certificate does not confer rights to the certificate holder in lieu of such endorsement(s).

PRODUCER Van Oppen & Co. 2, Inc. VOCO 2 Insurance & Risk Control Services P.O. Box 793 Teton Village WY 83025	**CONTACT NAME:** Brenda Todd **PHONE (A/C, No, Ext):** 800-746-0048 **FAX (A/C, No):** **E-MAIL ADDRESS:** service@vanoppenco2.com
INSURED WEECY-1 Weecycle Environmental Consulting, Inc. 1208 Commerce Ct #5B Lafayette CO 80026	**INSURER(S) AFFORDING COVERAGE** / **NAIC #** **INSURER A :** Homeland Insurance Company of New York / 34452 **INSURER B :** **INSURER C :** **INSURER D :** **INSURER E :** **INSURER F :**

COVERAGES **CERTIFICATE NUMBER:** 811353943 **REVISION NUMBER:**

THIS IS TO CERTIFY THAT THE POLICIES OF INSURANCE LISTED BELOW HAVE BEEN ISSUED TO THE INSURED NAMED ABOVE FOR THE POLICY PERIOD INDICATED. NOTWITHSTANDING ANY REQUIREMENT, TERM OR CONDITION OF ANY CONTRACT OR OTHER DOCUMENT WITH RESPECT TO WHICH THIS CERTIFICATE MAY BE ISSUED OR MAY PERTAIN, THE INSURANCE AFFORDED BY THE POLICIES DESCRIBED HEREIN IS SUBJECT TO ALL THE TERMS, EXCLUSIONS AND CONDITIONS OF SUCH POLICIES. LIMITS SHOWN MAY HAVE BEEN REDUCED BY PAID CLAIMS.

INSR LTR	TYPE OF INSURANCE	ADDL INSD	SUBR WVD	POLICY NUMBER	POLICY EFF (MM/DD/YYYY)	POLICY EXP (MM/DD/YYYY)	LIMITS	
A	X **COMMERCIAL GENERAL LIABILITY** CLAIMS-MADE [X] OCCUR X CPL (Pollution) GEN'L AGGREGATE LIMIT APPLIES PER: X POLICY [ ] PRO-JECT [ ] LOC OTHER:	Y	Y	793-00-78-72-0001	4/11/2020	4/11/2022	EACH OCCURRENCE DAMAGE TO RENTED PREMISES (Ea occurrence) MED EXP (Any one person) PERSONAL & ADV INJURY GENERAL AGGREGATE PRODUCTS - COMP/OP AGG	$ 2,000,000 $ 300,000 $ 10,000 $ 2,000,000 $ 2,000,000 $ 2,000,000
	AUTOMOBILE LIABILITY ANY AUTO ALL OWNED AUTOS SCHEDULED AUTOS HIRED AUTOS NON-OWNED AUTOS						COMBINED SINGLE LIMIT (Ea accident) BODILY INJURY (Per person) BODILY INJURY (Per accident) PROPERTY DAMAGE (Per accident)	$ $ $ $
	UMBRELLA LIAB OCCUR **EXCESS LIAB** CLAIMS-MADE DED RETENTION $						EACH OCCURRENCE AGGREGATE	$ $
	WORKERS COMPENSATION AND EMPLOYERS' LIABILITY ANY PROPRIETOR/PARTNER/EXECUTIVE OFFICER/MEMBER EXCLUDED? (Mandatory in NH) Y / N [ ] N / A If yes, describe under DESCRIPTION OF OPERATIONS below						PER STATUTE OTH-ER E.L. EACH ACCIDENT E.L. DISEASE - EA EMPLOYEE E.L. DISEASE - POLICY LIMIT	 $ $ $
A	Professional Liab "Claims Made"			793-00-78-72-0001	4/11/2020	4/11/2022	Each Claim Aggregate Subject to GL Agg	2,000,000 2,000,000

DESCRIPTION OF OPERATIONS / LOCATIONS / VEHICLES (ACORD 101, Additional Remarks Schedule, may be attached if more space is required)

The City of Black Hawk is included as additional insured on the general liability as required by written contract.

CERTIFICATE HOLDER

City of Black Hawk
Attn: City Clerk
PO Box 68
Black Hawk CO 80422

CANCELLATION

SHOULD ANY OF THE ABOVE DESCRIBED POLICIES BE CANCELLED BEFORE THE EXPIRATION DATE THEREOF, NOTICE WILL BE DELIVERED IN ACCORDANCE WITH THE POLICY PROVISIONS.

AUTHORIZED REPRESENTATIVE

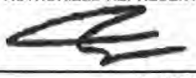

© 1988-2014 ACORD CORPORATION. All rights reserved.

Policy Number: 793-00-78-72-0001

THIS ENDORSEMENT CHANGES THE POLICY. PLEASE READ IT CAREFULLY.

ADDITIONAL INSURED – OWNERS, LESSEES OR CONTRACTORS – SCHEDULED PERSON OR ORGANIZATION – FORM I

This endorsement only modifies coverage provided under the following:

COMMERCIAL GENERAL LIABILITY COVERAGE PART
CONTRACTORS ENVIRONMENTAL LIABILITY COVERAGE PART

SCHEDULE

Name of Person or Organization:
Any person or organization that the "Named Insured" agreed to add as an additional insured in a written contract or written agreement that was fully executed by the "Named Insured" prior to the performance of the "Named Insured's" work that is the subject of such written contract or written agreement. Coverage afforded to such person or organization will not be broader than the scope of insurance agreed to by the "Named Insured" in such written contract or written agreement.

(If no entry appears above, information required to complete this endorsement will be shown in the Declarations as applicable to this endorsement.)

A. **SECTION II – WHO IS AN INSURED** is amended to include as an insured the person or organization shown in the SCHEDULE above, but only with respect to liability arising out of your ongoing operations performed for that insured.

B. With respect to the insurance afforded to these additional insureds, the following exclusion is added:

2. Exclusions

This insurance does not apply to **bodily injury**, **property damage** or **environmental damage** occurring after:

(a) All work, including materials, parts or equipment furnished in connection with such work, on the project (other than service, maintenance or repairs) to be performed by or on behalf of the additional insured(s) at the site of the covered operations has been completed; or

(b) That portion of **your work** out of which the injury or damage arises has been put to its intended use by any person or organization other than another contractor or subcontractor engaged in performing operations for a principal as a part of the same project.

All other terms and conditions remain the same.

Includes copyrighted material of Insurance Services Office, Inc.
Copyright 2011, OneBeacon Insurance Group LLC
E-INSURED

Policy Number: 793-00-78-72-0001

THIS ENDORSEMENT CHANGES THE POLICY. PLEASE READ IT CAREFULLY.

ADDITIONAL INSURED – OWNERS, LESSEES OR CONTRACTORS – COMPLETED OPERATIONS

This endorsement only modifies coverage provided under the following:

COMMERCIAL GENERAL LIABILITY COVERAGE PART
CONTRACTORS ENVIRONMENTAL LIABILITY COVERAGE PART

SCHEDULE

Name Of Additional Insured Person(s) Or Organization(s):	Location And Description Of Completed Operations:
Any person or organization that the "Named Insured" agreed to add as an additional insured in a written contract or written agreement that was fully executed by the "Named Insured" prior to the performance of the "Named Insured's" work that is the subject of such written contract or written agreement. Coverage afforded to such person or organization will not be broader than the scope of insurance agreed to by the "Named Insured" in such written contract or written agreement.	Any location, and completed operations at such location, where required by the written contract or written agreement between the Named Insured and the person or organization qualifying as an additional insured under this endorsement.

(If no entry appears above, information required to complete this endorsement will be shown in the Declarations as applicable to this endorsement.)

SECTION II – WHO IS AN INSURED is amended to include as an additional insured the person(s) or organization(s) shown in the SCHEDULE above, but only with respect to liability for **bodily injury**, **property damage** or **environmental damage** caused, in whole or in part, by **your work** at the location designated and described in the SCHEDULE above performed for that additional insured and included in the **products-completed operations hazard**.

All other terms and conditions remain the same.

Includes copyrighted material of Insurance Services Office, Inc.
Copyright 2011, OneBeacon Insurance Group LLC
E-INSURED

THIS ENDORSEMENT CHANGES THE POLICY. PLEASE READ IT CAREFULLY.

PRIMARY AND NON-CONTRIBUTORY ENDORSEMENT

This endorsement modifies coverage provided under the following:

COMMERCIAL GENERAL LIABILITY COVERAGE PART
CONTRACTORS ENVIRONMENTAL LIABILITY COVERAGE PART

SECTION IV - CONDITIONS, 8. Other Insurance, is amended by adding the following paragraph:

This insurance will be considered primary to, and non-contributory with any other insurance issued directly to a person or organization added as an additional insured under this policy, only if you specifically agree, in a written contract or agreement, that this insurance must be primary to, and non-contributory with, such other insurance.

All other terms and conditions remain the same.

Includes copyrighted material of Insurance Services Office, Inc.
Copyright 2011, OneBeacon Insurance Group LLC
E-INSURED

Policy Number: 793-00-78-72-0001

THIS ENDORSEMENT CHANGES THE POLICY. PLEASE READ IT CAREFULLY.

WAIVER OF TRANSFER OF RIGHTS OF RECOVERY AGAINST OTHERS TO US

This endorsement only modifies coverage provided under the following:

COMMERCIAL GENERAL LIABILITY COVERAGE PART
CONTRACTORS ENVIRONMENTAL LIABILITY COVERAGE PART

SCHEDULE

Name Of Person Or Organization:
Any person or organization that the "Named Insured" agreed to waive its rights of recovery against in a written contract or written agreement that was fully executed by the "Named Insured" prior to the performance of the "Named Insured's" work that is the subject of such written contract or written agreement. Such waiver will not be broader than the scope of the waiver agreed to by the "Named Insured" in such written contract or written agreement.

SECTION IV – CONDITIONS, 13. Transfer of Rights of Recovery Against Others To Us is deleted and replaced with the following:

13. Transfer of Rights of Recovery Against Others To Us

If the insured has rights to recover all or part of any payment we have made under this policy, those rights are transferred to us. The insured must do nothing to impair them. At our request, the insured will bring **suit** or transfer those rights to us and help us enforce them. Any recovery will be paid first to us until all amounts we have spent on a **claim** or **suit** have been reimbursed. The insured expressly waives the right to be made whole by any such recovery.

We waive any right of recovery we may have against the person or organization shown in the SCHEDULE above because of payments we make for injury or damage arising out of your ongoing operations or **your work** done under a contract with that person or organization and included in the **products-completed operations hazard**. This waiver applies only to the person or organization shown in the SCHEDULE above.

All other terms and conditions remain the same.

Includes copyrighted material of Insurance Services Office, Inc.
Copyright 2011, OneBeacon Insurance Group LLC
E-INSURED

CERTIFICATE OF LIABILITY INSURANCE

DATE (MM/DD/YYYY): 12/21/2020

THIS CERTIFICATE IS ISSUED AS A MATTER OF INFORMATION ONLY AND CONFERS NO RIGHTS UPON THE CERTIFICATE HOLDER. THIS CERTIFICATE DOES NOT AFFIRMATIVELY OR NEGATIVELY AMEND, EXTEND OR ALTER THE COVERAGE AFFORDED BY THE POLICIES BELOW. THIS CERTIFICATE OF INSURANCE DOES NOT CONSTITUTE A CONTRACT BETWEEN THE ISSUING INSURER(S), AUTHORIZED REPRESENTATIVE OR PRODUCER, AND THE CERTIFICATE HOLDER.

IMPORTANT: If the certificate holder is an ADDITIONAL INSURED, the policy(ies) must have ADDITIONAL INSURED provisions or be endorsed. If SUBROGATION IS WAIVED, subject to the terms and conditions of the policy, certain policies may require an endorsement. A statement on this certificate does not confer rights to the certificate holder in lieu of such endorsement(s).

PRODUCER	CONTACT NAME:	
Pinnacol Assurance 7501 E. Lowry Blvd. Denver, CO 80230-7006	PHONE (A/C, No, Ext):	FAX (A/C, No):
	E-MAIL ADDRESS:	
	INSURER(S) AFFORDING COVERAGE	NAIC #
	INSURER A : Pinnacol Assurance	41190
INSURED Weecycle Environmental Consulting Inc 1208 Commerce Ct Suite 5B Lafayette, CO 80026	INSURER B :	
	INSURER C :	
	INSURER D :	
	INSURER E :	
	INSURER F :	

COVERAGES **CERTIFICATE NUMBER:** **REVISION NUMBER:**

THIS IS TO CERTIFY THAT THE POLICIES OF INSURANCE LISTED BELOW HAVE BEEN ISSUED TO THE INSURED NAMED ABOVE FOR THE POLICY PERIOD INDICATED. NOTWITHSTANDING ANY REQUIREMENT, TERM OR CONDITION OF ANY CONTRACT OR OTHER DOCUMENT WITH RESPECT TO WHICH THIS CERTIFICATE MAY BE ISSUED OR MAY PERTAIN, THE INSURANCE AFFORDED BY THE POLICIES DESCRIBED HEREIN IS SUBJECT TO ALL THE TERMS, EXCLUSIONS AND CONDITIONS OF SUCH POLICIES. LIMITS SHOWN MAY HAVE BEEN REDUCED BY PAID CLAIMS.

INSR LTR	TYPE OF INSURANCE	ADDL INSD	SUBR WVD	POLICY NUMBER	POLICY EFF (MM/DD/YYYY)	POLICY EXP (MM/DD/YYYY)	LIMITS	
	COMMERCIAL GENERAL LIABILITY						EACH OCCURRENCE	$
	☐ CLAIMS-MADE ☐ OCCUR						DAMAGE TO RENTED PREMISES (Ea occurrence)	$
							MED EXP (Any one person)	$
							PERSONAL & ADV INJURY	$
	GEN'L AGGREGATE LIMIT APPLIES PER:						GENERAL AGGREGATE	$
	☐ POLICY ☐ PRO-JECT ☐ LOC						PRODUCTS - COMP/OP AGG	$
	OTHER:							$
	AUTOMOBILE LIABILITY						COMBINED SINGLE LIMIT (Ea accident)	$
	☐ ANY AUTO						BODILY INJURY (Per person)	$
	☐ OWNED AUTOS ONLY ☐ SCHEDULED AUTOS						BODILY INJURY (Per accident)	$
	☐ HIRED AUTOS ONLY ☐ NON-OWNED AUTOS ONLY						PROPERTY DAMAGE (Per accident)	$
								$
	☐ UMBRELLA LIAB ☐ OCCUR						EACH OCCURRENCE	$
	☐ EXCESS LIAB ☐ CLAIMS-MADE						AGGREGATE	$
	☐ DED ☐ RETENTION $							$
A	WORKERS COMPENSATION AND EMPLOYERS' LIABILITY Y / N ANY PROPRIETOR/PARTNER/EXECUTIVE OFFICER/MEMBER EXCLUDED? ☐ (Mandatory in NH) If yes, describe under DESCRIPTION OF OPERATIONS below	N / A		3444333	06/01/2020	06/01/2021	X PER STATUTE ☐ OTH-ER	
							E.L. EACH ACCIDENT	$ 1,000,000
							E.L. DISEASE - EA EMPLOYEE	$ 1,000,000
							E.L. DISEASE - POLICY LIMIT	$ 1,000,000

DESCRIPTION OF OPERATIONS / LOCATIONS / VEHICLES (ACORD 101, Additional Remarks Schedule, may be attached if more space is required)
Unless otherwise stated in the policy provisions, coverage in Colorado only.

CERTIFICATE HOLDER

2057175
City of Black Hawk
PO Box 68
Black Hawk, CO 80422-0068
Attn: City Clerk

CANCELLATION

SHOULD ANY OF THE ABOVE DESCRIBED POLICIES BE CANCELLED BEFORE THE EXPIRATION DATE THEREOF, NOTICE WILL BE DELIVERED IN ACCORDANCE WITH THE POLICY PROVISIONS.

AUTHORIZED REPRESENTATIVE

Pinnacol Assurance

© 1988-2015 ACORD CORPORATION. All rights reserved.

CERTIFICATE HOLDER COPY

City of Black Hawk
PO Box 68
Black Hawk, CO 80422-0068

IMPORTANT

If the certificate holder is an ADDITIONAL INSURED, the policy(ies) must be endorsed. A statement on this certificate does not confer rights to the certificate holder in lieu of such endorsement(s).

If SUBROGATION IS WAIVED, subject to the terms and conditions of the policy, certain policies may require an endorsement. A statement on this certificate does not confer rights to the certificate holder in lieu of such endorsement(s).

DISCLAIMER

The Certificate of Insurance on the reverse side of this form does not constitute a contract between the issuing insurer(s), authorized representative or producer, and the certificate holder, nor does it affirmatively or negatively amend, extend or alter the coverage afforded by the policies listed thereon.

DESCRIPTION OF OPERATIONS/LOCATIONS/VEHICLES/EXCLUSIONS ADDED BY ENDORSEMENT (CONT)

CERTIFICATE OF LIABILITY INSURANCE

DATE (MM/DD/YYYY): 12/22/2020

THIS CERTIFICATE IS ISSUED AS A MATTER OF INFORMATION ONLY AND CONFERS NO RIGHTS UPON THE CERTIFICATE HOLDER. THIS CERTIFICATE DOES NOT AFFIRMATIVELY OR NEGATIVELY AMEND, EXTEND OR ALTER THE COVERAGE AFFORDED BY THE POLICIES BELOW. THIS CERTIFICATE OF INSURANCE DOES NOT CONSTITUTE A CONTRACT BETWEEN THE ISSUING INSURER(S), AUTHORIZED REPRESENTATIVE OR PRODUCER, AND THE CERTIFICATE HOLDER.

IMPORTANT: If the certificate holder is an ADDITIONAL INSURED, the policy(ies) must have ADDITIONAL INSURED provisions or be endorsed. If SUBROGATION IS WAIVED, subject to the terms and conditions of the policy, certain policies may require an endorsement. A statement on this certificate does not confer rights to the certificate holder in lieu of such endorsement(s).

PRODUCER	CONTACT NAME:	
Debbie Brundage(071737X) 7390 Lowell Blvd Westminster CO 80030-4879	PHONE (A/C, NO, EXT): 303-427-0355	FAX (A/C, NO): 855-618-4640
	E-MAIL ADDRESS: dbrundage@farmersagent.com	

INSURED	INSURER(S) AFFORDING COVERAGE	NAIC #
WEECYCLE ENVIRONMENTAL 1208 COMMERCE COURT UNIT 5B LAFAYETTE CO 80026	INSURER A: Truck Insurance Exchange	21709
	INSURER B: Farmers Insurance Exchange	21652
	INSURER C: Mid Century Insurance Company	21687
	INSURER D:	
	INSURER E:	
	INSURER F:	

COVERAGES CERTIFICATE NUMBER: REVISION NUMBER:

THIS IS TO CERTIFY THAT THE POLICIES OF INSURANCE LISTED BELOW HAVE BEEN ISSUED TO THE INSURED NAME ABOVE FOR THE POLICY PERIOD INDICATED. NOTWITHSTANDING ANY REQUIREMENT, TERM OR CONDITION OF ANY CONTRACT OR OTHER DOCUMENT WITH RESPECT TO WHICH THIS CERTIFICATE MAY BE ISSUED OR MAY PERTAIN, THE INSURANCE AFFORDED BY THE POLICIES DESCRIBED HEREIN IS SUBJECT TO ALL THE TERMS, EXCLUSIONS AND CONDITIONS OF SUCH POLICIES. LIMITS SHOWN MAY HAVE BEEN REDUCED BY PAID CLAIMS.

INSR LTR	TYPE OF INSURANCE	ADDTL INSD	SUBR WVD	POLICY NUMBER	POLICY EFF (MM/DD/YYYY)	POLICY EXP (MM/DD/YYYY)	LIMITS	
	COMMERCIAL GENERAL LIABILITY						EACH OCCURRENCE	$
	CLAIMS-MADE / OCCUR						DAMAGE TO RENTED PREMISES (Ea Occurrence)	$
							MED EXP (Any one person)	$
							PERSONAL & ADV INJURY	$
	GEN'L AGGREGATE LIMIT APPLIES PER:						GENERAL AGGREGATE	$
	POLICY / PROJECT / LOC						PRODUCTS - COMP/OP AGG	$
	OTHER:							$
A	AUTOMOBILE LIABILITY						COMBINED SINGLE LIMIT (Ea accident)	$ 1,000,000
	ANY AUTO						BODILY INJURY (Per person)	$
	OWNED AUTOS ONLY / SCHEDULED AUTOS (X)	Y		604665311	07/18/2020	07/18/2021	BODILY INJURY (Per accident)	$
	HIRED AUTOS ONLY (X) / NON-OWNED AUTOS ONLY (X)						PROPERTY DAMAGE (Per accident)	$
								$
	UMBRELLA LIAB / OCCUR						EACH OCCURRENCE	$
	EXCESS LIAB / CLAIMS-MADE						AGGREGATE	$
	DED / RETENTION $							$
	WORKERS COMPENSATION AND EMPLOYERS' LIABILITY						PER STATUTE / OTHER	$
	ANY PROPRIETOR/PARTNER/ EXECUTIVE OFFICER/MEMBER EXCLUDED? (Mandatory in NH) Y/N	N/A					E.L. EACH ACCIDENT	$
	If yes, describe under DESCRIPTION OF OPERATIONS below						E.L. DISEASE - EA EMPLOYEE	$
							E.L. DISEASE - POLICY LIMIT	$

DESCRIPTION OF OPERATIONS/LOCATIONS/VEHICLES (ACORD 101, Additional Remarks Schedule, may be attached if more space is required)

CERTIFICATE HOLDER	CANCELLATION
City of Black Hawk PO Box 68 Black Hawk CO 80422-0068 Attn City Clerk	SHOULD ANY OF THE ABOVE DESCRIBED POLICIES BE CANCELLED BEFORE THE EXPIRATION DATE THEREOF, NOTICE WILL BE DELIVERED IN ACCORDANCE WITH THE POLICY PROVISIONS. AUTHORIZED REPRESENTATIVE Aphton Griffey

©1988-2015 ACORD CORPORATION. All Rights Reserved

The ACORD name and logo are registered marks of ACORD

RESOLUTION 5-2021

A RESOLUTION APPROVING CERTAIN SERVICE AGREEMENTS FOR CALENDAR YEAR 2021

STATE OF COLORADO
COUNTY OF GILPIN
CITY OF BLACK HAWK

Resolution No. 5-2021

TITLE: A RESOLUTION APPROVING CERTAIN SERVICE AGREEMENTS FOR CALENDAR YEAR 2021

NOW, THEREFORE, BE IT RESOLVED BY THE CITY COUNCIL OF THE CITY OF BLACK HAWK, COLORADO, THAT:

Section 1. The City Council hereby approves the Services Agreements for the Public Works Department with the entities and for the services set forth below (the "Agreements"), and authorizes the Mayor to sign the Agreements on behalf of the City.

Entity	Service
One-Way	Residential Trash Service
Sun Valley Electric	Electrical
Baseline Engineering Corp.	Surveying
Logical Systems, Inc.	Controls-water system
Leonard Rice Engineers, Inc.	Water Rights Accounting/Engineering
Baseline Engineering Corp	Surveying/General Civil
Grapes and Sons Excavating LLC	Waterline repair and general excavation
Ostrander Consulting	Transit Assistance
Illumin8/WL	Traffic Signal Maintenance
Terracon	Geotechnical Services
Stolfus & Associates	Traffic/Roadway services
PEH	Architectural

RESOLVED AND PASSED this 13th day of January, 2021.

_____
David D. Spellman, Mayor

ATTEST:

_____
Melissa A. Greiner, CMC, City Clerk

CITY OF BLACK HAWK

REQUEST FOR COUNCIL ACTION

SUBJECT: Approve Resolution 5-2021, a Resolution authorizing the Mayor to execute the agreements for various annual service providers.

RECOMMENDATION: If City Council chooses to approve Resolution 5-2021, the recommended motion is as follows: "Motion to approve Resolution 5-2021, a Resolution approving certain service agreements for calendar year 2021."

SUMMARY AND BACKGROUND OF SUBJECT MATTER:
The Public Works Department utilizes several service providers to supplement services provided to the City from engineering and related activities to trash removal and electrical and emergency water line repair services. The consultants proposed are:

Baseline Engineering Corp	Surveying
Baseline Engineering Corp	General Civil
Stolfus & Associates	Roadway/Traffic
Terracon	Geotechnical
Ostrander Consulting	Transit
Grapes & Sons Excavating	Waterline and general excavation
One-Way	Residential Trash Services
LSI	SCADA, Controls, Plant programming
Leonard Rice	Water Rights Engineering/Accounting
Ilumin8/WL	Traffic Signal and Highway Lighting
Sun Valley	Electrical
PEH	Architectural

FUNDING SOURCE: varies by project

WORKSHOP DATE: January 13, 2021

ORIGINATED BY: Thomas Isbester

STAFF PERSON RESPONSIBLE: TI/JF/MR/ES

PROJECT COMPLETION DATE: December 31, 2021

DOCUMENTS ATTACHED: agreements

CITY ATTORNEY REVIEW: [ ]Yes [ ]No [ ]N/A INITIALS_____

SUBMITTED BY:

Thomas Isbester, Public Works Director

REVIEWED BY:

Stephen N. Cole, City Manager

THIRD ADDENDUM TO PROFESSIONAL SERVICES AGREEMENT

THIS THIRD ADDENDUM TO PROFESSIONAL SERVICES AGREEMENT (the "Third Addendum") is made and entered into this _____ day of _____, by and between the City of Black Hawk, Colorado (hereinafter referred to as the "City") and **Baseline Engineering Corporation** (hereinafter referred to as "Consultant").

RECITALS:

A. On November 10, 2017 the City and Consultant entered into a Professional Services Agreement (the "Agreement").

B. On November 26, 2018 the City and Consultant entered into the First Addendum to Professional Services Agreement (the "First Addendum").

C. On January 22, 2020 the City and Consultant entered into the Second Addendum to Professional Services Agreement (the "Second Addendum").

D. The parties desire to further extend the Agreement with this Third Addendum for one additional year.

AGREEMENT

NOW, THEREFORE, it is hereby agreed that for the consideration hereinafter set forth, that Contractor shall provide to the City, the additional work as needed in the manner provided in this Forth Addendum.

1. The contract term for the Agreement is hereby extended by this Third Addendum for one additional year, from January 1, 2021, through and including December 31, 2021.

2. Contractor shall perform all work as set forth in the Agreement in accordance with Contractor's rate schedule attached hereto as **Exhibit A**, and incorporated by this reference.

3. The original Agreement is in full force and effect and is hereby ratified by the City and the Contractor. The original Agreement, the First Addendum, the Second Addendum, and this Third Addendum constitute all of the agreements between the City and the Contractor.

IN WITNESS WHEREOF, the parties hereto each herewith subscribe the same in duplicate.

CITY OF BLACK HAWK, COLORADO

By: _____

ATTEST:

_____
Melissa A. Greiner, City Clerk
City Clerk

APPROVED AS TO FORM:

_____
Corey Y. Hoffmann
City Attorney

CONSULTANT

By: _____

AARON DEMO
Print Name

SURVEY DIVISION MANAGER 1/5/21
Title Date

ATTEST:

By: _____

Laura E Wright
Print Name

Project Coordinator 1/5/21
Title Date

BASELINE
Engineering · Planning · Surveying

EXHIBIT A-1

Schedule of Charges

Description/ Job Title	Regular Rate	City Rate
Professional Land Surveyor	$175	$155
Survey Project Manager	$150	$130
Land Surveyor (crew chief office work)	$95	$90
Survey Crew	$193	$185
CAD Technician	$100	$95
Administrative	$65	$60

CERTIFICATE OF LIABILITY INSURANCE

DATE (MM/DD/YYYY): 5/19/2020

THIS CERTIFICATE IS ISSUED AS A MATTER OF INFORMATION ONLY AND CONFERS NO RIGHTS UPON THE CERTIFICATE HOLDER. THIS CERTIFICATE DOES NOT AFFIRMATIVELY OR NEGATIVELY AMEND, EXTEND OR ALTER THE COVERAGE AFFORDED BY THE POLICIES BELOW. THIS CERTIFICATE OF INSURANCE DOES NOT CONSTITUTE A CONTRACT BETWEEN THE ISSUING INSURER(S), AUTHORIZED REPRESENTATIVE OR PRODUCER, AND THE CERTIFICATE HOLDER.

IMPORTANT: If the certificate holder is an ADDITIONAL INSURED, the policy(ies) must have ADDITIONAL INSURED provisions or be endorsed. If SUBROGATION IS WAIVED, subject to the terms and conditions of the policy, certain policies may require an endorsement. A statement on this certificate does not confer rights to the certificate holder in lieu of such endorsement(s).

PRODUCER	RISKPRO Insurance Agency, LLC 901 Waterfall Way, Suite 407 Richardson, TX 75080
CONTACT NAME:	
PHONE (A/C, No, Ext): ( ) -	FAX (A/C, No): ( ) -
E-MAIL ADDRESS:	

INSURER(S) AFFORDING COVERAGE		NAIC #
INSURER A :	Travelers Indemnity Co of America	25666
INSURER B :	Charter Oak Fire Insurance Company	25615
INSURER C :	Travelers Property Casualty Co. of Amer.	25674
INSURER D :	QBE Insurance Corporation	39217
INSURER E :		
INSURER F :		

INSURED: Baseline Engineering Corporation
112 N Rubey Drive, Suite 210
Golden, CO 80403

COVERAGES — CERTIFICATE NUMBER: — REVISION NUMBER:

THIS IS TO CERTIFY THAT THE POLICIES OF INSURANCE LISTED BELOW HAVE BEEN ISSUED TO THE INSURED NAMED ABOVE FOR THE POLICY PERIOD INDICATED. NOTWITHSTANDING ANY REQUIREMENT, TERM OR CONDITION OF ANY CONTRACT OR OTHER DOCUMENT WITH RESPECT TO WHICH THIS CERTIFICATE MAY BE ISSUED OR MAY PERTAIN, THE INSURANCE AFFORDED BY THE POLICIES DESCRIBED HEREIN IS SUBJECT TO ALL THE TERMS EXCLUSIONS AND CONDITIONS OF SUCH POLICIES. LIMITS SHOWN MAY HAVE BEEN REDUCED BY PAID CLAIMS.

LTR	TYPE OF INSURANCE	ADDL INSD	SUBR WVD	POLICY NUMBER	POLICY EFF (MM/DD/YYYY)	POLICY EXP (MM/DD/YYYY)	LIMITS	
X	COMMERCIAL GENERAL LIABILITY			680-1J16755020-47	5/23/2020	5/23/2021	EACH OCCURRENCE	$ 1,000,000
	CLAIMS-MADE X OCCUR						DAMAGE TO RENTED PREMISES (Ea occurrence)	$ 1,000,000
	Contractual						MED EXP (Any one person)	$ 5,000
	Liability						PERSONAL & ADV INJURY	$ 1,000,000
	GEN'L AGGREGATE LIMIT APPLIES PER:						GENERAL AGGREGATE	$ 2,000,000
	POLICY X PRO-JECT LOC						PRODUCTS - COMP/OP AGG	$ 2,000,000
	OTHER:							$
	AUTOMOBILE LIABILITY			BA-7F99761320-GRP	5/23/2020	5/23/2021	COMBINED SINGLE LIMIT (Ea accident)	$ 1,000,000
X	ANY AUTO						BODILY INJURY (Per person)	$
X	OWNED AUTOS ONLY						BODILY INJURY (Per accident)	$
X	HIRED AUTOS ONLY	X					PROPERTY DAMAGE (Per accident)	$
	SCHEDULED AUTOS / NON-OWNED AUTOS ONLY							$
	UMBRELLA LIAB OCCUR						EACH OCCURRENCE	$
	EXCESS LIAB CLAIMS-MADE						AGGREGATE	$
	DED RETENTION $							$
	WORKERS COMPENSATION AND EMPLOYERS' LIABILITY			UB-5K26750920-47-G	5/23/2020	5/23/2021	X PER STATUTE OTH-ER	
	ANY PROPRIETOR/PARTNER/EXECUTIVE OFFICER/MEMBER EXCLUDED? Y/N N/A (Mandatory in NH)						E.L. EACH ACCIDENT	$ 1,000,000
	If yes, describe under DESCRIPTION OF OPERATIONS below						E.L. DISEASE - EA EMPLOYEE	$ 1,000,000
							E.L. DISEASE - POLICY LIMIT	$ 1,000,000
	Professional Liability			ANE41140-01	5/23/2020	5/23/2021	Each Claim	$2,000,000
							Aggregate	$2,000,000

DESCRIPTION OF OPERATIONS / LOCATIONS / VEHICLES (ACORD 101, Additional Remarks Schedule, may be attached if more space is required)

verage is subject to all policy terms, conditions, exclusions and endorsements.

y of Black Hawk, its officers and employees as additional insureds on general liability as required by tten contract but only as respects operations of the named insured.

CERTIFICATE HOLDER

City of Black Hawk
P.O. Box 68
211 Church Street
Black Hawk CO 80422

CANCELLATION

SHOULD ANY OF THE ABOVE DESCRIBED POLICIES BE CANCELLED BEFORE THE EXPIRATION DATE THEREOF, NOTICE WILL BE DELIVERED IN ACCORDANCE WITH THE POLICY PROVISIONS.

AUTHORIZED REPRESENTATIVE

© 1988-2015 ACORD CORPORATION. All rights reserve

SECOND ADDENDUM TO PROFESSIONAL SERVICES AGREEMENT

THIS SECOND ADDENDUM TO PROFESSIONAL SERVICES AGREEMENT (the "Second Addendum") is made and entered into this _____ day of _____, by and between the City of Black Hawk, Colorado (hereinafter referred to as the "City") and **Baseline Engineering Corporation** (hereinafter referred to as "Consultant").

RECITALS:

A. On December 12, 2018 the City and Consultant entered into a Professional Services Agreement (the "Agreement").

B. On January 22, 2020 the City and Consultant entered into the First Addendum to Professional Services Agreement (the "First Addendum").

C. The parties desire to further extend the Agreement with this Second Addendum for one additional year.

AGREEMENT

NOW, THEREFORE, it is hereby agreed that for the consideration hereinafter set forth, that Contractor shall provide to the City, the work as needed in the manner provided in this Second Addendum.

1. The contract term for the Agreement is hereby extended by this Second Addendum for one additional year, from January 1, 2021, through and including December 31, 2021.

2. Contractor shall perform all work described in **Exhibit A** and as set forth in the Agreement in accordance with Contractor's rate schedule attached hereto as **Exhibit B**, and incorporated by this reference.

3. The original Agreement is in full force and effect and is hereby ratified by the City and the Contractor. The original Agreement, the First Addendum, and this Second Addendum constitute all of the agreements between the City and the Contractor.

IN WITNESS WHEREOF, the parties hereto each herewith subscribe the same in duplicate.

CITY OF BLACK HAWK, COLORADO

By: _____

ATTEST:

_____
Melissa A. Greiner, City Clerk
City Clerk

APPROVED AS TO FORM:

_____
Corey Y. Hoffmann
City Attorney

CONSULTANT

BASELINE ENG. CORPORATION

By: _____

VINCENT HARRIS
Print Name

PRINCIPAL / OWNER 1/6/21
Title Date

ATTEST:

By: Rhonda Madsen
Rhonda Madsen
Print Name

HR Manager 1/6/2021
Title Date

EXHIBIT A

SCOPE OF SERVICES
2021 On-Call Civil Engineering Services

Services and responsibilities may include, but not necessarily be limited to, the following:

Development review. Contractor may be requested to review and comment on proposed development plans and technical reports that are received by the City. Contractor shall ensure proposed developments conform to applicable engineering standards and specifications.

General civil engineering design. The City may request the Contractor to complete various civil engineering designs and prepare engineering plans and reports, including grading plans, utility plans and profiles, stormwater management plans, roadway plans, and related detail sheets.

Drainage design. The City may request the Contractor to perform various hydrologic and hydraulic calculations and prepare reports, plans, and specifications to design storm sewer systems, open channel conveyance systems, detention and water quality facilities, and other assorted drainage improvements.

Drainage analysis. The City may request the Contractor to analyze existing drainage systems to determine condition and capacity.

Floodplain analysis. Contractor shall be prepared and qualified to perform full- service floodplain analysis, including preparation of CLOMR and LOMR documents.

General structural engineering design. The City may request the Contractor to complete structural calculations and designs, including foundation construction and remediation, historic structure restoration, bridge repair, and retaining wall construction and repair.

Structural analysis. The City may request the Contractor to analyze existing structures to determine structural condition and stability.

Opinions of probable construction costs. Contractor shall prepare and/or review civil and structural construction costs, as requested.

Meeting attendance. The City may require the Contractor to provide competent civil and structural engineering personnel at one-time or regular meetings during construction projects.

Contractor shall retain qualified personnel, including licensed Professional Engineers, to perform the above Scope of Services.

AN EMPLOYEE-OWNED COMPANY
BASELINE
Engineering · Planning · Surveying

EXHIBIT B
Rate Schedule

Description/Job Title	Regular Rate	City Rate
Division Manager	$195	$160
Senior Project Manager, PE	$175	$150
Project Manager, PE	$155	$135
Project Engineer, PE II	$137	$125
Project Engineer, PE I	$120	$112
Project Engineer, EIT	$112	$105
Staff Engineer/Designer III	$110	$95
Staff Engineer/Designer II	$100	$90
Staff Engineer/Designer	$95	$85
CAD Technician I	$95	$80
Field Inspector II	$125	$115
Field Inspector	$105	$95
Administrative	$65	$60

ACORD

CERTIFICATE OF LIABILITY INSURANCE

DATE (MM/DD/YYYY)
5/19/2020

THIS CERTIFICATE IS ISSUED AS A MATTER OF INFORMATION ONLY AND CONFERS NO RIGHTS UPON THE CERTIFICATE HOLDER. THIS CERTIFICATE DOES NOT AFFIRMATIVELY OR NEGATIVELY AMEND, EXTEND OR ALTER THE COVERAGE AFFORDED BY THE POLICIES BELOW. THIS CERTIFICATE OF INSURANCE DOES NOT CONSTITUTE A CONTRACT BETWEEN THE ISSUING INSURER(S), AUTHORIZED REPRESENTATIVE OR PRODUCER, AND THE CERTIFICATE HOLDER.

IMPORTANT: If the certificate holder is an ADDITIONAL INSURED, the policy(ies) must have ADDITIONAL INSURED provisions or be endorsed. If SUBROGATION IS WAIVED, subject to the terms and conditions of the policy, certain policies may require an endorsement. A statement on this certificate does not confer rights to the certificate holder in lieu of such endorsement(s).

PRODUCER RISKPRO Insurance Agency, LLC 901 Waterfall Way, Suite 407 Richardson, TX 75080	CONTACT NAME: PHONE (A/C, No, Ext): ( ) - FAX (A/C, No): ( ) - E-MAIL ADDRESS:
INSURED Baseline Engineering Corporation 112 N Rubey Drive, Suite 210 Golden, CO 80403	INSURER A: Travelers Indemnity Co of America — NAIC # 25666 INSURER B: Charter Oak Fire Insurance Company — 25615 INSURER C: Travelers Property Casualty Co. of Amer. — 25674 INSURER D: QBE Insurance Corporation — 39217 INSURER E: INSURER F:

COVERAGES CERTIFICATE NUMBER: REVISION NUMBER:

THIS IS TO CERTIFY THAT THE POLICIES OF INSURANCE LISTED BELOW HAVE BEEN ISSUED TO THE INSURED NAMED ABOVE FOR THE POLICY PERIOD INDICATED. NOTWITHSTANDING ANY REQUIREMENT, TERM OR CONDITION OF ANY CONTRACT OR OTHER DOCUMENT WITH RESPECT TO WHICH THIS CERTIFICATE MAY BE ISSUED OR MAY PERTAIN, THE INSURANCE AFFORDED BY THE POLICIES DESCRIBED HEREIN IS SUBJECT TO ALL THE TERMS EXCLUSIONS AND CONDITIONS OF SUCH POLICIES. LIMITS SHOWN MAY HAVE BEEN REDUCED BY PAID CLAIMS.

LTR	TYPE OF INSURANCE	ADDL INSD	SUBR WVD	POLICY NUMBER	POLICY EFF (MM/DD/YYYY)	POLICY EXP (MM/DD/YYYY)	LIMITS	
X	COMMERCIAL GENERAL LIABILITY							
	CLAIMS-MADE X OCCUR			680-1J16755020-47	5/23/2020	5/23/2021	EACH OCCURRENCE	$ 1,000,000
	Contractual						DAMAGE TO RENTED PREMISES (Ea occurrence)	$ 1,000,000
	Liability						MED EXP (Any one person)	$ 5,000
	GEN'L AGGREGATE LIMIT APPLIES PER:						PERSONAL & ADV INJURY	$ 1,000,000
	POLICY X PRO-JECT LOC						GENERAL AGGREGATE	$ 2,000,000
	OTHER:						PRODUCTS - COMP/OP AGG	$ 2,000,000
								$
X	AUTOMOBILE LIABILITY						COMBINED SINGLE LIMIT (Ea accident)	$ 1,000,000
X	ANY AUTO			BA-7F99761320-GRP	5/23/2020	5/23/2021	BODILY INJURY (Per person)	$
X	OWNED AUTOS ONLY						BODILY INJURY (Per accident)	$
X	HIRED AUTOS ONLY						PROPERTY DAMAGE (Per accident)	$
X	SCHEDULED AUTOS / NON-OWNED AUTOS ONLY							$
	UMBRELLA LIAB OCCUR						EACH OCCURRENCE	$
	EXCESS LIAB CLAIMS-MADE						AGGREGATE	$
	DED RETENTION $							$
	WORKERS COMPENSATION AND EMPLOYERS' LIABILITY						X PER STATUTE OTH-ER	
	ANY PROPRIETOR/PARTNER/EXECUTIVE OFFICER/MEMBER EXCLUDED? Y/N (Mandatory in NH)	N/A		UB-5K26750920-47-G	5/23/2020	5/23/2021	E.L. EACH ACCIDENT	$ 1,000,000
	If yes, describe under DESCRIPTION OF OPERATIONS below						E.L. DISEASE - EA EMPLOYEE	$ 1,000,000
							E.L. DISEASE - POLICY LIMIT	$ 1,000,000
	Professional Liability			ANE41140-01	5/23/2020	5/23/2021	Each Claim	$2,000,000
							Aggregate	$2,000,000

DESCRIPTION OF OPERATIONS / LOCATIONS / VEHICLES (ACORD 101, Additional Remarks Schedule, may be attached if more space is required)

Coverage is subject to all policy terms, conditions, exclusions and endorsements.

City of Black Hawk, its officers and employees as additional insureds on general liability as required by written contract but only as respects operations of the named insured.

CERTIFICATE HOLDER	CANCELLATION
City of Black Hawk P.O. Box 68 211 Church Street Black Hawk CO 80422	SHOULD ANY OF THE ABOVE DESCRIBED POLICIES BE CANCELLED BEFORE THE EXPIRATION DATE THEREOF, NOTICE WILL BE DELIVERED IN ACCORDANCE WITH THE POLICY PROVISIONS. AUTHORIZED REPRESENTATIVE Gerald P Brumber

© 1988-2015 ACORD CORPORATION. All rights reserve

FIFTH ADDENDUM TO PROFESSIONAL SERVICES AGREEMENT

THIS FIFTH ADDENDUM TO PROFESSIONAL SERVICES AGREEMENT (the "Fifth Addendum") is made and entered into this _____ day of _____, by and between the City of Black Hawk, Colorado (hereinafter referred to as the "City") and Stolfus and Associates, Inc. (hereinafter referred to as "Consultant").

RECITALS:

A. On December 9, 2015 the City and Consultant entered into a Professional Services Agreement (the "Agreement").

B. On January 11, 2017 the City and Consultant entered into the First Addendum to Professional Services Agreement (the "First Addendum").

C. On December 13, 2017 the City and Consultant entered into the Second Addendum to Professional Services Agreement (the "Second Addendum").

D. On December 12, 2018 the City and Consultant entered into the Third Addendum to Professional Services Agreement (the 'Third Addendum").

E. On January 22, 2020 the City and Consultant entered into the Fourth Addendum to Professional Services Agreement (the 'Fourth Addendum").

F. The parties desire to further extend the Agreement with this Fifth Addendum for one additional year.

AGREEMENT

NOW, THEREFORE, it is hereby agreed that for the consideration hereinafter set forth, that Contractor shall provide to the City, the additional work as needed in the manner provided in this Forth Addendum.

1. The contract term for the Agreement is hereby extended by this Fifth Addendum for one additional year, from January 1, 2021, through and including December 31, 2021.

2. Contractor shall perform all work as set forth in the Agreement in accordance with Contractor's rate schedule attached hereto as **Exhibit A**, and incorporated by this reference.

3. The original Agreement is in full force and effect and is hereby ratified by the City and the Contractor. The original Agreement, the First Addendum, the Second Addendum, the Third Addendum, the Fourth Addendum, and this Fifth Addendum constitute all of the agreements between the City and the Contractor.

IN WITNESS WHEREOF, the parties hereto each herewith subscribe the same in duplicate.

CITY OF BLACK HAWK, COLORADO

By: _____

ATTEST:

_____
Melissa A. Greiner, City Clerk
City Clerk

APPROVED AS TO FORM:

_____
Corey Y. Hoffmann
City Attorney

CONSULTANT

By: Elizabeth B. Stoffus

Elizabeth B. Stoffus
Print Name

President 11/19/2020
Title Date

ATTEST:

By: _____

Stephen Mystkowski
Print Name

Senior Engineer 11/19/20
Title Date

2021 STANDARD HOURLY RATES

Professional Services

Principal-President	$190/hr
Professional Engineer 5	$170/hr
Professional Engineer 4	$160/hr
Professional Engineer 3	$150/hr
Professional Engineer 2	$140/hr
Professional Engineer 1	$120/hr
Engineering Intern 3	$100/hr
Engineering Intern 2	$100/hr
Engineering Intern 1	$100/hr
Engineering Student Intern	$ 60/hr
Office Manager	$ 70/hr
Administrative Assistant 1	$ 60/hr
Expert Witness Services*	
Expert Witness (Principal-President)	$400/hr
Expert Witness (PE-5)	$350/hr

*includes deposition testimony, courtroom appearances, transcript review, etc.

Outside Consultants **at cost**

Other Direct Costs

Mileage	at Standard Federal Rate
Outside reproduction	at cost
Other expenses	at cost

Client#: 1087135 STOLFASS

ACORD™ CERTIFICATE OF LIABILITY INSURANCE

DATE (MM/DD/YYYY) 10/07/2020

THIS CERTIFICATE IS ISSUED AS A MATTER OF INFORMATION ONLY AND CONFERS NO RIGHTS UPON THE CERTIFICATE HOLDER. THIS CERTIFICATE DOES NOT AFFIRMATIVELY OR NEGATIVELY AMEND, EXTEND OR ALTER THE COVERAGE AFFORDED BY THE POLICIES BELOW. THIS CERTIFICATE OF INSURANCE DOES NOT CONSTITUTE A CONTRACT BETWEEN THE ISSUING INSURER(S), AUTHORIZED REPRESENTATIVE OR PRODUCER, AND THE CERTIFICATE HOLDER.

IMPORTANT: If the certificate holder is an ADDITIONAL INSURED, the policy(ies) must have ADDITIONAL INSURED provisions or be endorsed. If SUBROGATION IS WAIVED, subject to the terms and conditions of the policy, certain policies may require an endorsement. A statement on this certificate does not confer any rights to the certificate holder in lieu of such endorsement(s).

PRODUCER	CONTACT NAME:	
USI Insurance Services, LLC P.O. Box 7050 Englewood, CO 80155 800 873-8500	PHONE (A/C, No, Ext): 800 873-8500	FAX (A/C, No):
	E-MAIL ADDRESS:	
	INSURER(S) AFFORDING COVERAGE	NAIC #
	INSURER A : Hartford Casualty Insurance Company	29424
INSURED Stolfus & Associates, Inc. 5690 DTC Boulevard Suite 330W Greenwood Village, CO 80111	INSURER B : Hartford Ins Co of the Midwest	37478
	INSURER C : XL Specialty Insurance Company	37885
	INSURER D :	
	INSURER E :	
	INSURER F :	

COVERAGES **CERTIFICATE NUMBER:** **REVISION NUMBER:**

THIS IS TO CERTIFY THAT THE POLICIES OF INSURANCE LISTED BELOW HAVE BEEN ISSUED TO THE INSURED NAMED ABOVE FOR THE POLICY PERIOD INDICATED. NOTWITHSTANDING ANY REQUIREMENT, TERM OR CONDITION OF ANY CONTRACT OR OTHER DOCUMENT WITH RESPECT TO WHICH THIS CERTIFICATE MAY BE ISSUED OR MAY PERTAIN, THE INSURANCE AFFORDED BY THE POLICIES DESCRIBED HEREIN IS SUBJECT TO ALL THE TERMS, EXCLUSIONS AND CONDITIONS OF SUCH POLICIES. LIMITS SHOWN MAY HAVE BEEN REDUCED BY PAID CLAIMS.

INSR LTR	TYPE OF INSURANCE	ADDL INSR	SUBR WVD	POLICY NUMBER	POLICY EFF (MM/DD/YYYY)	POLICY EXP (MM/DD/YYYY)	LIMITS	
A	[X] COMMERCIAL GENERAL LIABILITY			34SBWPD4904	10/01/2020	10/01/2021	EACH OCCURRENCE	$2,000,000
	[ ] CLAIMS-MADE [X] OCCUR						DAMAGE TO RENTED PREMISES (Ea occurrence)	$1,000,000
							MED EXP (Any one person)	$10,000
							PERSONAL & ADV INJURY	$2,000,000
	GEN'L AGGREGATE LIMIT APPLIES PER:						GENERAL AGGREGATE	$4,000,000
	[ ] POLICY [X] PRO-JECT [ ] LOC						PRODUCTS - COMP/OP AGG	$4,000,000
	[ ] OTHER:							$
/	UTOMOBILE LIABILITY			34SBWPD4904	10/01/2020	10/01/2021	COMBINED SINGLE LIMIT (Ea accident)	$2,000,000
	[ ] ANY AUTO						BODILY INJURY (Per person)	$
	[ ] OWNED AUTOS ONLY [ ] SCHEDULED AUTOS						BODILY INJURY (Per accident)	$
	[X] HIRED AUTOS ONLY [X] NON-OWNED AUTOS ONLY						PROPERTY DAMAGE (Per accident)	$
								$
A	[X] UMBRELLA LIAB [X] OCCUR			34SBWPD4904	10/01/2020	10/01/2021	EACH OCCURRENCE	$2,000,000
	[ ] EXCESS LIAB [ ] CLAIMS-MADE						AGGREGATE	$2,000,000
	DED [X] RETENTION $10000							$
B	WORKERS COMPENSATION AND EMPLOYERS' LIABILITY Y / N			34WEGBS5226	10/01/2020	10/01/2021	[X] PER STATUTE [ ] OTH-ER	
	ANY PROPRIETOR/PARTNER/EXECUTIVE OFFICER/MEMBER EXCLUDED? [N]	N / A					E.L. EACH ACCIDENT	$1,000,000
	(Mandatory in NH) If yes, describe under DESCRIPTION OF OPERATIONS below						E.L. DISEASE - EA EMPLOYEE	$1,000,000
							E.L. DISEASE - POLICY LIMIT	$1,000,000
C	Professional Liability Claims Made			DPR9966959	10/01/2020	10/01/2021	$2,000,000 per claim $2,000,000 annl aggr.	

DESCRIPTION OF OPERATIONS / LOCATIONS / VEHICLES (ACORD 101, Additional Remarks Schedule, may be attached if more space is required)

As required by written contract or written agreement, the following provisions apply subject to the policy terms, conditions, limitations and exclusions: The Certificate Holder and owner are included as Automatic Additional Insured's for ongoing and completed operations under General Liability; Designated Insured under Automobile Liability; and Additional Insureds under Umbrella/Excess Liability but only with respect to liability arising out of the Named Insured work performed on behalf of the certificate holder and owner. (See Attached Descriptions)

CERTIFICATE HOLDER

City of Black Hawk
987 Miners Mesa Road
P.O. Box 68
Black Hawk, CO 80422

CANCELLATION

SHOULD ANY OF THE ABOVE DESCRIBED POLICIES BE CANCELLED BEFORE THE EXPIRATION DATE THEREOF, NOTICE WILL BE DELIVERED IN ACCORDANCE WITH THE POLICY PROVISIONS.

AUTHORIZED REPRESENTATIVE

© 1988-2015 ACORD CORPORATION. All rights reserved.

DESCRIPTIONS (Continued from Page 1)

The General Liability, Automobile Liability, Umbrella/Excess insurance applies on a primary and non contributory basis. A Blanket Waiver of Subrogation applies for General Liability, Automobile Liability, Umbrella/Excess Liability and Workers Compensation. The Umbrella/Excess Liability policy provides excess coverage over the General Liability, Automobile Liability and Employers Liability.

Please note that Additional Insured status does not apply to Professional Liability or Workers' Compensation.
RE: City of Black Hawk On-Call contract.

SECOND ADDENDUM TO THE AGREEMENT FOR PROFESSIONAL SERVICES

THIS SECOND ADDENDUM TO THE AGREEMENT FOR PROFESSIONAL SERVICES ("Second Addendum") is made and entered into this 21st day of December 2020, by and between the City of Black Hawk, Colorado (hereinafter referred to as the "City") and Terracon Consultants, Inc. (hereinafter referred to as the "Contractor").

RECITALS

A. On December 12, 2018 the City and Contractor entered into an Agreement for Professional Services (the "Agreement").

B. On January 22, 2020 the City and Contractor executed a First Addendum to extend the Agreement by one year (the "First Addendum").

C. The parties desire to extend the Agreement with this Second Addendum for one additional year.

AGREEMENT

NOW, THEREFORE, it is hereby agreed that for the consideration hereinafter set forth, that Contractor shall provide to the City the additional work as needed in the manner provided in this Second Addendum.

A. The contract term for the Agreement is hereby extended by this Second Addendum for one additional year, from January 1, 2021 through December 31, 2021.

B. Contractor shall complete the scope of services as described in **Exhibit A**, attached hereto and incorporated herein by this reference. Compensation shall not exceed Thirty thousand dollars ($30,000) for the work described in **Exhibit A**.

C. Contractor shall perform all work as set forth in the Agreement in accordance with Contractor's rate schedule as described in **Exhibit B**, attached hereto and incorporated herein by this reference.

D. The original Agreement is in full force and effect and is hereby ratified by the City and the Contractor.

IN WITNESS WHEREOF, the parties hereto each herewith subscribe the same in duplicate.

CITY OF BLACK HAWK, COLORADO

By: _____
David D. Spellman, Mayor

ATTEST:

_____
Melissa A. Greiner, City Clerk

APPROVED AS TO FORM:

_____
Corey Y. Hoffmann, City Attorney

TERRACON CONSULTANTS, INC.

By: Thomas Madrid

Its: Materials Department Manager

STATE OF COLORADO)
) ss.
COUNTY OF JEFFERSON)

The foregoing instrument was subscribed, sworn to, and acknowledged before me this 21ST day of DECEMBER, 2020, by THOMAS MADRID as the MATERIALS DEPT MANAGER of TERRACON CONSULTANTS, INC..

My commission expires: 01-05-2021

(S E A L)

Sharla J Hamilton
Notary Public

SHARLA J HAMILTON
Notary Public
State of Colorado
Notary ID # 20174000580
My Commission Expires 01-05-2021

EXHIBIT A

SCOPE OF SERVICES

2021 On-Call Geotechnical Services

Services and responsibilities may include, but not necessarily be limited to, the following:

Subsurface exploration and geotechnical analysis. Contractor shall have expertise and equipment as necessary to examine existing site conditions and prepare complete geotechnical recommendations and reports.

Materials testing. Contractor shall have ready access to a laboratory equipped to provide all material testing associated with general construction.

Pavement design and analysis. The City may request the Contractor to design full-depth asphalt, concrete, and composite pavement sections. Contractor shall evaluate existing pavements and recommend rehabilitative procedures.

Retaining wall and foundation design recommendations. Contractor shall collaborate with the City-retained structural engineer to evaluate and provide recommendations for retaining walls, building foundations, and other similar structures.

Construction inspection. Contractor shall provide qualified personnel to inspect general construction and paving projects.

Rock excavation and stabilization. Contractor shall provide recommendations for rock removal, which may include preparation of drilling and blasting specifications. Contractor shall evaluate rock stability and recommend various rock stabilization methods as necessary.

Opinions of probable construction costs. Contractor shall estimate and/or review geotechnical-related construction costs.

Meeting attendance. The City may request the Contractor to provide competent engineering and technician personnel at one-time or regular meetings during construction projects.

Contractor shall retain qualified in-house personnel, including licensed Professional Engineers and Geologists, to perform the above Scope of Work.

EXHIBIT B

CITY OF BLACK HAWK 2021 ON CALL GEOTECHNICAL SERVICES

REIMBURSEMENT SCHEDULE

Geotechnical Engineering and Materials Services*

Personnel	Rate ($)
Subject Matter Expert	225.00/hr
Authorized Project Reviewer (APR)	195.00/hr
Department Manager	165.00/hr
Project Engineer	132.00/hr
Senior Project Manager	110.00/hr
Staff Engineer	95.00/hr
Structural Steel Inspector	90.00/hr
Senior Engineering Technician	55.00/hr
CADD/Drafting	51.00/hr
Special Inspector	60.00/hr
Engineering Technician (concrete, soils and asphalt)	50.00/hr
Note: An overtime premium of 1.5 limes the hourly rate will apply for services provided Monday through Friday that are In excess of 8 hours per day and for services provided before 7:00 AM and after 6:00 PM, as well as for services provided on same day calls, Saturday, Sunday and Terracon recognized Holidays. All charges are portal to portal. A minimum charge of 3 hours will be incurred for field work excluding sample pick-up.	

Laboratory Testing	Rate ($)
Atterberg Limits	60.00/ea
Sieve Analysis (washed)	60.00/ea
-200	33.00/ea
One Point Check	71.00/ea
Proctor D-698 Moisture-Density Relationships	132.00/ea
Proctor D-1557 Moisture-Density Relationships	143.00/ea
Moisture Content.	10.00/ea
Dry Density	10.00/ea
Swell-Consolidation	75.00/ea
Unconfined Compression	75.00/ea
Remolded Unconfined Compression (proctor not included)	150.00/ea
R-Value	375.00/ea
Soluble Sulfate	25.00/ea
pH	10.00/ea
Resistivity	55.00/ea
Corrosivity (includes soluble sulfate and pH)	65.00/ea
Concrete Compressive Strength	16.00/ea
Mortar/Grout Compressive Strength	16.00/ea
Masonry Prism Compressive Strength	65.00/ea
Gyratory Compaction	150.00/ea
Asphalt Content/Gradation	150.00/ea
Maximum Theoretical Density	150.00/ea Core
Thickness/Density	30.00/ea

CITY OF BLACK HAWK 2021 ON CALL GEOTECHNICAL SERVICES

REIMBURSEMENT SCHEDULE

Geotechnical Engineering and Materials Services*

Equipment	Rate ($)
Private Utility Clearance	100.00/hr (2 hour minimum)
Drill Rig Mobilization	165.00/hr
Drill Rig (4" solid stem)	165.00/hr
Drill Rig Equipment Fee (Truck Rig)	50.00/hr
Drill Rig Equipment Fee (ATV Rig)	60.00/hr
Floor Flatness/Floor Levelness Testing	400.00/trip
Ultrasonic Testing (UT) Equipment	125.00/day
Magnetic Particle Testing (MT) Equipment	65.00/day
Mileage	0.65/mi
Material Report Preparation & Review	35.00/report
Outside services	At cost + 20%

**Project-specific fees for geotechnical explorations, laboratory testing schedules and analyses/reports shall be provided on a per-project basis via specific geotechnical proposals and lump sum budgets once project specifics have been provided to Terracon.*

CERTIFICATE OF LIABILITY INSURANCE

1/1/2022

DATE (MM/DD/YYYY): 12/21/2020

THIS CERTIFICATE IS ISSUED AS A MATTER OF INFORMATION ONLY AND CONFERS NO RIGHTS UPON THE CERTIFICATE HOLDER. THIS CERTIFICATE DOES NOT AFFIRMATIVELY OR NEGATIVELY AMEND, EXTEND OR ALTER THE COVERAGE AFFORDED BY THE POLICIES BELOW. THIS CERTIFICATE OF INSURANCE DOES NOT CONSTITUTE A CONTRACT BETWEEN THE ISSUING INSURER(S), AUTHORIZED REPRESENTATIVE OR PRODUCER, AND THE CERTIFICATE HOLDER.

IMPORTANT: If the certificate holder is an ADDITIONAL INSURED, the policy(ies) must have ADDITIONAL INSURED provisions or be endorsed. If SUBROGATION IS WAIVED, subject to the terms and conditions of the policy, certain policies may require an endorsement. A statement on this certificate does not confer rights to the certificate holder in lieu of such endorsement(s).

PRODUCER Lockton Companies 444 W. 47th Street, Suite 900 Kansas City MO 64112-1906 (816) 960-9000	**CONTACT NAME:** **PHONE (A/C, No, Ext):** **FAX (A/C, No):** **E-MAIL ADDRESS:**
	INSURER(S) AFFORDING COVERAGE — **NAIC #**
	INSURER A : Lexington Insurance Company — 19437
INSURED 1312893 TERRACON CONSULTANTS, INC. 10625 WEST I-70 FRONTAGE ROAD NORTH WHEAT RIDGE CO 80033	**INSURER B :** Travelers Property Casualty Co of America — 25674
	INSURER C : The Travelers Indemnity Company — 25658
	INSURER D :
	INSURER E :
	INSURER F :

COVERAGES * **CERTIFICATE NUMBER:** 15164451 **REVISION NUMBER:** XXXXXXX

THIS IS TO CERTIFY THAT THE POLICIES OF INSURANCE LISTED BELOW HAVE BEEN ISSUED TO THE INSURED NAMED ABOVE FOR THE POLICY PERIOD INDICATED. NOTWITHSTANDING ANY REQUIREMENT, TERM OR CONDITION OF ANY CONTRACT OR OTHER DOCUMENT WITH RESPECT TO WHICH THIS CERTIFICATE MAY BE ISSUED OR MAY PERTAIN, THE INSURANCE AFFORDED BY THE POLICIES DESCRIBED HEREIN IS SUBJECT TO ALL THE TERMS, EXCLUSIONS AND CONDITIONS OF SUCH POLICIES. LIMITS SHOWN MAY HAVE BEEN REDUCED BY PAID CLAIMS.

INSR LTR	TYPE OF INSURANCE	ADDL INSD	SUBR WVD	POLICY NUMBER	POLICY EFF (MM/DD/YYYY)	POLICY EXP (MM/DD/YYYY)	LIMITS	
B	X COMMERCIAL GENERAL LIABILITY [ ] CLAIMS-MADE [X] OCCUR X CONTRACTUAL LIAB X XCU COVERAGE GEN'L AGGREGATE LIMIT APPLIES PER: [ ] POLICY [X] PRO-JECT [ ] LOC [ ] OTHER:	Y	N	TC2J-GLSA-1118L293	1/1/2021	1/1/2022	EACH OCCURRENCE DAMAGE TO RENTED PREMISES (Ea occurrence) MED EXP (Any one person) PERSONAL & ADV INJURY GENERAL AGGREGATE PRODUCTS - COMP/OP AGG $	$ 2,000,000 $ 1,000,000 $ 25,000 $ 1,000,000 $ 4,000,000 $ 4,000,000 $
B	AUTOMOBILE LIABILITY X ANY AUTO OWNED AUTOS ONLY HIRED AUTOS ONLY SCHEDULED AUTOS NON-OWNED AUTOS ONLY	N	N	TC2J-CAP-131J3858.	1/1/2021	1/1/2022	COMBINED SINGLE LIMIT (Ea accident) BODILY INJURY (Per person) BODILY INJURY (Per accident) PROPERTY DAMAGE (Per accident) $	$ 2,000,000 $ XXXXXXX $ XXXXXXX $ XXXXXXX $ XXXXXXX
	[ ] UMBRELLA LIAB [ ] OCCUR [ ] EXCESS LIAB [ ] CLAIMS-MADE [ ] DED [ ] RETENTION $			NOT APPLICABLE			EACH OCCURRENCE AGGREGATE $	$ XXXXXXX $ XXXXXXX $ XXXXXXX
B C	WORKERS COMPENSATION AND EMPLOYERS' LIABILITY ANY PROPRIETOR/PARTNER/EXECUTIVE OFFICER/MEMBER EXCLUDED? (Mandatory in NH) Y/N [N] If yes, describe under DESCRIPTION OF OPERATIONS below	N/A	N	TC2J-UB-6N32541-0 (AOS) TRK-UB-6N32384-6 (AZ,MA,WI)	1/1/2021 1/1/2021	1/1/2022 1/1/2022	X PER STATUTE [ ] OTH-ER E.L. EACH ACCIDENT E.L. DISEASE - EA EMPLOYEE E.L. DISEASE - POLICY LIMIT	 $ 1,000,000 $ 1,000,000 $ 1,000,000
A	PROFESSIONAL LIABILITY	N	N	26030216	1/1/2021	1/1/2022	$1,000,000 EACH CLAIM & $1,000,000 ANNUAL AGGREGATE	

DESCRIPTION OF OPERATIONS / LOCATIONS / VEHICLES (ACORD 101, Additional Remarks Schedule, may be attached if more space is required)

2018 ON CALL GEOTECHNICAL ENGINEERING AND TESTING SERVICES AGREEMENT. CITY OF BLACK HAWK, THE CITY AND THE CITY'S OFFICERS, EMPLOYEES, AND CONSULTANTS ARE ADDITIONAL INSUREDS AS RESPECTS GENERAL LIABILITY AND THIS COVERAGE IS PRIMARY AND NON-CONTRIBUTORY, AS REQUIRED BY WRITTEN CONTRACT.

CERTIFICATE HOLDER

15164451
CITY OF BLACKHAWK
ATT: CITY CLERK
PO BOX 68
BLACK HAWK CO 80422-0068

CANCELLATION

SHOULD ANY OF THE ABOVE DESCRIBED POLICIES BE CANCELLED BEFORE THE EXPIRATION DATE THEREOF, NOTICE WILL BE DELIVERED IN ACCORDANCE WITH THE POLICY PROVISIONS.

AUTHORIZED REPRESENTATIVE

Joseph M Agnello

© 1988-2015 ACORD CORPORATION. All rights reserved.

PERSONAL SERVICES AGREEMENT

THIS AGREEMENT is made and entered into by and between the City of Black Hawk, hereinafter referred to as "City" and Ostrander Consulting, Inc. whose address is 1250 Humboldt, Unit 1401, Denver, CO 80218 hereinafter referred to as "Consultant" as follows:

1. **SERVICES TO BE PERFORMED BY CONSULTANT**. Consultant shall perform the following: instruction and/or services during the days and times, and at the location, as more particularly described in Attachment "A", which is attached hereto and incorporated herein and made a part hereof by this reference.

2. **TERM**. The term of this Agreement shall commence on the 1st day of January, 2021 and shall terminate on the 31st day of December, 2021 unless earlier terminated pursuant to Section 9 herein.

3. **COMPENSATION**. In consideration of the performance of the instruction and/or services provided herein, Consultant shall receive compensation as provided through the rate schedule listed in Attachment "A".

4. **METHOD OF PAYMENT**. The compensation provided in Section 3 shall be paid by the City to Consultant upon filing of an invoice specifying the services provided.

5. **EQUIPMENT, MATERIALS AND SUPPLIES**. Unless otherwise agreed by the City, Consultant shall acquire, provide, maintain and repair at Consultant's sole cost and expense such equipment, materials, supplies, etc., as necessary for the proper conduct of the aforesaid instruction and/or services.

6. **COMPLIANCES**. In the conduct of the instruction and/or services contemplated hereunder, Consultant shall comply with all applicable laws, rules and regulations, and the directives or instructions issued by the City or its designated representatives.

7. **INDEPENDENT CONSULTANT**. Consultant agrees that he/she is an independent consultant and that accordingly neither he she nor his employees are covered by the City's workers' compensation policy, or any other worker's compensation policy.

8. **HOLD HARMLESS**. Consultant, to the fullest extent permitted by law, shall indemnify, defend and hold harmless the City, its officers, agents and employees, from and against any and all loss, damage, injuries, claims, or causes of action, or any liability of any kind whatsoever resulting from, arising out of or in connection with the instruction and/or services provided by Consultant pursuant to this agreement.

9. **TERMINATION**. The City shall have the right to terminate this Agreement upon three (3) days notice, if Consultant fails to comply with the terms and conditions set forth in this Agreement.

10. **ASSIGNMENT**. Consultant shall not assign or otherwise transfer this Agreement or any rights or obligations therein, without first receiving prior written consent of the City.

11. **INSURANCE.** Consultant understands and agrees that Consultant shall have no right of coverage under any and all existing or future City comprehensive or personal injury liability policies, and in that regard, Consultant agrees to provide insurance coverage on behalf of the Consultant, that will sufficiently protect Consultant, or his agents, servants and employees, in connection with the services which are to be provided by Consultant pursuant to this Agreement.

12. CONTRACT INTERPRETATION

A. No amendment or modification of this agreement shall be valid unless expressed in writing and executed by the parties hereto in the same manner as the execution of this Agreement.

B. This is a completely integrated Agreement and contains the entire Agreement of the parties, and any prior written or oral agreement which are different from the terms, conditions and provisions of this Agreement shall be of no effect and shall not be binding upon either party.

C. This Agreement and the provisions hereof shall be binding upon and shall inure to the benefit of the parties and their respective successors; provided that neither party may assign its rights hereunder without the previous written consent of the other party which shall not be unreasonably withheld.

D. Notice required or permitted to be given hereunder (including any notice of change of address) shall be considered delivered when hand-delivered or when mailed, by United States mail, first-class postage paid, as follows:

City of Black Hawk:
City Clerk
PO Box 68
Black Hawk, CO 80422

Consultant:
Amy Ostrander

Ostrander Consulting, Inc.

1250 Humboldt, Unit 1401

Denver, CO 80218

All notices so given shall be considered effective when delivered by hand-delivery, or in writing, as stated above.

E. This Agreement may be executed in two or more counterparts, each of which shall be deemed to be an original hereof and all of which together shall constitute a single agreement.

F. This Agreement is made and delivered in the State of Colorado, and shall be construed and enforced in accordance with the laws thereof.

IN WITNESS WHEREOF, the parties have executed this agreement as of the dates written opposite their respective signatures.

CITY OF BLACK HAWK, COLORADO

_____
David D. Spellman, Mayor

ATTEST:

_____
Melissa A. Greiner, CMC
City Clerk

CONSULTANT

By: Amy Ostrander

STATE OF COLORADO)
) ss.
COUNTY OF Denver)

The foregoing instrument was subscribed, sworn to, and acknowledged before me this 25th day of November, 2020, by Amy Erickson Ostrander.

My commission expires: 09/14/2021

(S E A L)

Notary Public

MONICA I. TORIBIO
NOTARY PUBLIC
STATE OF COLORADO
NOTARY ID 20174038653
MY COMMISSION EXPIRES SEPT. 14, 2021

OSTRANDER CONSULTING INC
DEFINING TRANSPORTATION SOLUTIONS
Amy Ostrander
1250 Humboldt Unit 1401 Denver, CO 80218
Voice 720.855.7404 Fax 720.855.8984
E-mail aostranderconsulting@msn.com

City of Black Hawk
On-Call Technical Assistance to Support City Transit Service for 2021

Ostrander Consulting, Inc. focuses on defining solutions for rural, resort, and specialized transportation services. Ostrander Consulting, Inc., led by principal Amy Ostrander, combines a strong educational and professional background in transportation with significant operations experience.

Technical Assistance will be provided to the City of Black Hawk in the area following areas to support City transit services:

Area
Marketing/advertising support
Passenger service improvement/rider surveys
Operational planning
Risk management and safety
Strategic planning
Maintenance management and capital replacement
State and federal regulatory compliance
Grants application/management
Contract provider oversight
Other planning areas as directed
Other technical assistance as directed

Consultant Service Fee Schedule

Technical Assistance	Ostrander	$140.00/hour
Marketing Assistance	Contract	$50.00/hour

(Brochure Distribution/Survey Work/Other as Assigned)
Reimbursable expenses must be accompanied by proof of payment.

No work will be commenced without authorization of the City of Black Hawk Staff. This service will be provided on-call only. The City of Black Hawk has no commitment for any minimum level of work or time frame for requesting assistance.

November 24, 2020

ACORD®

CERTIFICATE OF LIABILITY INSURANCE

DATE (MM/DD/YYYY)
4/17/2020

THIS CERTIFICATE IS ISSUED AS A MATTER OF INFORMATION ONLY AND CONFERS NO RIGHTS UPON THE CERTIFICATE HOLDER. THIS CERTIFICATE DOES NOT AFFIRMATIVELY OR NEGATIVELY AMEND, EXTEND OR ALTER THE COVERAGE AFFORDED BY THE POLICIES BELOW. THIS CERTIFICATE OF INSURANCE DOES NOT CONSTITUTE A CONTRACT BETWEEN THE ISSUING INSURER(S), AUTHORIZED REPRESENTATIVE OR PRODUCER, AND THE CERTIFICATE HOLDER.

IMPORTANT: If the certificate holder is an ADDITIONAL INSURED, the policy(ies) must have ADDITIONAL INSURED provisions or be endorsed. If SUBROGATION IS WAIVED, subject to the terms and conditions of the policy, certain policies may require an endorsement. A statement on this certificate does not confer rights to the certificate holder in lieu of such endorsement(s).

PRODUCER INSURANCE GROUP OF COLORADO LLC 1113 East Alameda Avenue Denver, CO 80209	CONTACT NAME: DAVE MECHLING PHONE (A/C, No, Ext): (303)778-7811 FAX (A/C, No): (303)778-8991 E-MAIL ADDRESS: dave@compsrvs.com	
	INSURER(S) AFFORDING COVERAGE	NAIC #
	INSURER A: TRAVELERS INSURANCE COMPANY	
INSURED OSTRANDER CONSULTING, INC. 1250 HUMBOLDT STREET UNIT 1401 DENVER, CO 80218	INSURER B:	
	INSURER C:	
	INSURER D:	
	INSURER E:	
	INSURER F:	

COVERAGES CERTIFICATE NUMBER: REVISION NUMBER:

THIS IS TO CERTIFY THAT THE POLICIES OF INSURANCE LISTED BELOW HAVE BEEN ISSUED TO THE INSURED NAMED ABOVE FOR THE POLICY PERIOD INDICATED. NOTWITHSTANDING ANY REQUIREMENT, TERM OR CONDITION OF ANY CONTRACT OR OTHER DOCUMENT WITH RESPECT TO WHICH THIS CERTIFICATE MAY BE ISSUED OR MAY PERTAIN, THE INSURANCE AFFORDED BY THE POLICIES DESCRIBED HEREIN IS SUBJECT TO ALL THE TERMS, EXCLUSIONS AND CONDITIONS OF SUCH POLICIES. LIMITS SHOWN MAY HAVE BEEN REDUCED BY PAID CLAIMS.

INSR LTR	TYPE OF INSURANCE	ADDL INSD	SUBR WVD	POLICY NUMBER	POLICY EFF (MM/DD/YYYY)	POLICY EXP (MM/DD/YYYY)	LIMITS	
A	X COMMERCIAL GENERAL LIABILITY ☐ CLAIMS-MADE ☒ OCCUR	X		2026512910	2/12/2020	2/12/2021	EACH OCCURRENCE	$ 1,000,000
							DAMAGE TO RENTED PREMISES (Ea occurrence)	$ 300,000
							MED EXP (Any one person)	$ 10,000
							PERSONAL & ADV INJURY	$ 1,000,000
	GEN'L AGGREGATE LIMIT APPLIES PER: ☐ POLICY ☐ PRO-JECT ☒ LOC						GENERAL AGGREGATE	$ 2,000,000
							PRODUCTS - COMP/OP AGG	$ 2,000,000
	OTHER:							$
A	AUTOMOBILE LIABILITY ☐ ANY AUTO	X		2026512910	2/12/2020	2/12/2021	COMBINED SINGLE LIMIT (Ea accident)	$ 1,000,000
	☐ OWNED AUTOS ONLY ☐ SCHEDULED AUTOS						BODILY INJURY (Per person)	$
	☒ HIRED AUTOS ONLY ☒ NON-OWNED AUTOS ONLY						BODILY INJURY (Per accident)	$
							PROPERTY DAMAGE (Per accident)	$
								$
	☐ UMBRELLA LIAB ☐ OCCUR						EACH OCCURRENCE	$
	☐ EXCESS LIAB ☐ CLAIMS-MADE						AGGREGATE	$
	☐ DED ☐ RETENTION $							$
	WORKERS COMPENSATION AND EMPLOYERS' LIABILITY Y/N ANY PROPRIETOR/PARTNER/EXECUTIVE OFFICER/MEMBER EXCLUDED? ☐ (Mandatory in NH) If yes, describe under DESCRIPTION OF OPERATIONS below	N/A					☐ PER STATUTE ☐ OTH-ER	
							E.L. EACH ACCIDENT	$
							E.L. DISEASE - EA EMPLOYEE	$
							E.L. DISEASE - POLICY LIMIT	$

DESCRIPTION OF OPERATIONS / LOCATIONS / VEHICLES (ACORD 101, Additional Remarks Schedule, may be attached if more space is required)

CITY OF BLACK HAWK IS INLUDED AS ADDITIONAL INSURED AS REQUIRED PER WRITTEN CONTRACT WITH RESPECTS TO THE GENERAL LIABILITY POLICY.

CERTIFICATE HOLDER	CANCELLATION
CITY OF BLACK HAWK ATTENTION : PUBLIC WORKS PO BOX 68 BLACK HAWK, COLORADO 80422	SHOULD ANY OF THE ABOVE DESCRIBED POLICIES BE CANCELLED BEFORE THE EXPIRATION DATE THEREOF, NOTICE WILL BE DELIVERED IN ACCORDANCE WITH THE POLICY PROVISIONS. AUTHORIZED REPRESENTATIVE D M Mechling

© 1988-2015 ACORD CORPORATION. All rights reserved.

SECOND ADDENDUM TO PROFESSIONAL SERVICES AGREEMENT

THIS SECOND ADDENDUM TO PROFESSIONAL SERVICES AGREEMENT (the Second Addendum") is made and entered into this 6 day of January 2021, by and between the **City of Black Hawk**, Colorado (hereinafter referred to as the "City") and **Grapes & Sons Excavating, LLC,** (hereinafter referred to as "Contractor").

RECITALS:

A. On December 11, 2018 the City and Contractor entered into a Personal Services Agreement (the "Agreement").

B. On January 06, 2020 the City and Contractor entered into the First Addendum to Professional Services Agreement ("First Addendum").

C. The parties desire to further extend the Agreement with this Second Addendum for one additional year.

AGREEMENT

NOW, THEREFORE, it is hereby agreed that for the consideration hereinafter set forth, that Contractor shall provide to the City, the additional work as needed in the manner provided in this Second Addendum.

1. The contract term for the Agreement is hereby extended by this Second Addendum for one additional year, from January 1, 2021, through and including December 31, 2021.

2. Contractor shall perform all work as set forth in the Agreement in accordance with Contractor's rate schedule attached hereto as **Exhibit A**, and incorporated by this reference.

3. The original Agreement is in full force and effect and is hereby ratified by the City and the Contractor. The original Agreement, the First Addendum and this Second Amendment constitute all of the agreements between the City and the Contractor.

IN WITNESS WHEREOF, the parties hereto each herewith subscribe the same in duplicate.

CITY OF BLACK HAWK, COLORADO

By: _____
David D. Spellman, Mayor

ATTEST:

_____
Melissa A. Greiner, City Clerk
City Clerk

APPROVED AS TO FORM:

_____
Corey Y. Hoffmann
City Attorney

GRAPES & SONS EXCAVATING, LLC

By: Holly Grapes
Holly GRAPES
Print Name

MANAGER
Title Date

ATTEST:

By: _____
Kyla Crawford
Print Name

Office Assistant 1/6/2021
Title Date

Machine Hourly Rates: 2021

Case 350 Excavator	@ $250.00 per hr
Case 245 Excavator	@ $220.00 per hr
w/hammer	@ $250.00 per hr
Case 210 Excavator	@ $200.00 per hr
w/hammer	@ $250.00 per hr
Case 9040 - 60,000 pound Excavator	@ $200.00 per hr
Case 160C - 40,000 Pound Excavator	@ $165.00 per hr
w/hammer	@ $225.00 per hr
Yanmar SV100 - 20,000 Pound Excavator	@ $150.00 per hr
w/Hydro Hammer	@ $185.00 per hr
Case 60 Mini Excavator	@ $125.00 per hr
w/Hammer	@ $160.00 per hr
Yanmar Vio 35 Mini Excavator	@ $ 105.00 per hr
Case 821 Loader Rubber tires	@ $180.00 per hr
Case Track Skid Steer	@ $105.00 per hr
w/masticator	@ $150.00 per hr
Case 1850 Crawler Loader	@ $200.00 per hr
3½ yard 953 Crawler Loader	@ $150.00 per hr
54" Smooth Drum Roller Compactor	@ $ 90.00 per hr
Cat Double Drum Roller	@ $ 90.00 per hr
Wacker Remote Control Walk - Behind Compactor	@ $ 90.00 per hr
Jumping Jack	@ $ 75.00 per hr
Plate Compactor	@ $ 75.00 per hr
Chop Saw	@ $ 70.00 per hr
Manual Labor	@ $ 52.50 per hr
Supervisor	@ $ 70.00 per hr

Machine Hourly Rates: 2021

John Deer 770 Grader	@ $150.00 per hr
Chipper	@ $110.00 per hr
Lowboy	@ $ 135.00 per hr
Side dump	@ $ 120.00 per hr
Tandem Dump Truck	@ $ 95.00 per hr
Ground Thaw Machine	To be determined per project

CERTIFICATE OF LIABILITY INSURANCE

DATE (MM/DD/YYYY): 09/03/2020

THIS CERTIFICATE IS ISSUED AS A MATTER OF INFORMATION ONLY AND CONFERS NO RIGHTS UPON THE CERTIFICATE HOLDER. THIS CERTIFICATE DOES NOT AFFIRMATIVELY OR NEGATIVELY AMEND, EXTEND OR ALTER THE COVERAGE AFFORDED BY THE POLICIES BELOW. THIS CERTIFICATE OF INSURANCE DOES NOT CONSTITUTE A CONTRACT BETWEEN THE ISSUING INSURER(S), AUTHORIZED REPRESENTATIVE OR PRODUCER, AND THE CERTIFICATE HOLDER.

IMPORTANT: If the certificate holder is an ADDITIONAL INSURED, the policy(ies) must have ADDITIONAL INSURED provisions or be endorsed. If SUBROGATION IS WAIVED, subject to the terms and conditions of the policy, certain policies may require an endorsement. A statement on this certificate does not confer rights to the certificate holder in lieu of such endorsement(s).

PRODUCER FEDERATED MUTUAL INSURANCE COMPANY HOME OFFICE: P.O. BOX 328 OWATONNA, MN 55060	CONTACT NAME: CLIENT CONTACT CENTER PHONE (A/C, No, Ext): 888-333-4949 FAX (A/C, No): 507-446-4664 E-MAIL ADDRESS: CLIENTCONTACTCENTER@FEDINS.COM

INSURER(S) AFFORDING COVERAGE	NAIC #
INSURER A: FEDERATED MUTUAL INSURANCE COMPANY	13935
INSURER B:	
INSURER C:	
INSURER D:	
INSURER E:	
INSURER F:	

INSURED 173-715-4
GRAPES & SONS EXCAVATING
PO BOX 571
BLACK HAWK, CO 80422-0571

COVERAGES **CERTIFICATE NUMBER: 51** **REVISION NUMBER: 0**

THIS IS TO CERTIFY THAT THE POLICIES OF INSURANCE LISTED BELOW HAVE BEEN ISSUED TO THE INSURED NAMED ABOVE FOR THE POLICY PERIOD INDICATED. NOTWITHSTANDING ANY REQUIREMENT, TERM OR CONDITION OF ANY CONTRACT OR OTHER DOCUMENT WITH RESPECT TO WHICH THIS CERTIFICATE MAY BE ISSUED OR MAY PERTAIN. THE INSURANCE AFFORDED BY THE POLICIES DESCRIBED HEREIN IS SUBJECT TO ALL THE TERMS, EXCLUSIONS AND CONDITIONS OF SUCH POLICIES. LIMITS SHOWN MAY HAVE BEEN REDUCED BY PAID CLAIMS.

INSR LTR	TYPE OF INSURANCE	ADDL INSR	SUBR WVD	POLICY NUMBER	POLICY EFF (MM/DD/YYYY)	POLICY EXP (MM/DD/YYYY)	LIMITS	
A	X COMMERCIAL GENERAL LIABILITY CLAIMS-MADE X OCCUR GEN'L AGGREGATE LIMIT APPLIES PER: X POLICY PRO-JECT LOC OTHER:	N	N	9817058	10/11/2020	10/11/2021	EACH OCCURRENCE DAMAGE TO RENTED PREMISES (Ea occurrence) MED EXP (Any one person) PERSONAL & ADV INJURY GENERAL AGGREGATE PRODUCTS - COMP/OP AGG	$1,000,000 $100,000 $5,000 $1,000,000 $2,000,000 $2,000,000
A	AUTOMOBILE LIABILITY X ANY AUTO OWNED AUTOS ONLY SCHEDULED AUTOS HIRED AUTOS ONLY NON-OWNED AUTOS ONLY	N	N	9817058	10/11/2020	10/11/2021	COMBINED SINGLE LIMIT (Ea accident) BODILY INJURY (Per person) BODILY INJURY (Per accident) PROPERTY DAMAGE (Per accident)	$1,000,000
A	X UMBRELLA LIAB X OCCUR EXCESS LIAB CLAIMS-MADE DED RETENTION	N	N	9817060	10/11/2020	10/11/2021	EACH OCCURRENCE AGGREGATE	$1,000,000 $1,000,000
A	WORKERS COMPENSATION AND EMPLOYERS' LIABILITY Y / N ANY PROPRIETOR/PARTNER/EXECUTIVE OFFICER/MEMBER EXCLUDED? N / A (Mandatory in NH) If yes, describe under DESCRIPTION OF OPERATIONS below	N / A	N	9817061	11/01/2020	11/01/2021	X PER STATUTE OTH-ER E.L. EACH ACCIDENT E.L. DISEASE - EA EMPLOYEE E.L. DISEASE - POLICY LIMIT	 $500,000 $500,000 $500,000

DESCRIPTION OF OPERATIONS / LOCATIONS / VEHICLES (ACORD 101, Additional Remarks Schedule, may be attached if more space is required)

CERTIFICATE HOLDER

173-715-4 51 0
CITY OF BLACK HAWK
PO BOX 68
BLACK HAWK, CO 80422-0068

CANCELLATION

SHOULD ANY OF THE ABOVE DESCRIBED POLICIES BE CANCELLED BEFORE THE EXPIRATION DATE THEREOF, NOTICE WILL BE DELIVERED IN ACCORDANCE WITH THE POLICY PROVISIONS.

AUTHORIZED REPRESENTATIVE

Michael G Kerr

© 1988-2015 ACORD CORPORATION. All rights reserved.

FIFTH ADDENDUM TO PROFESSIONAL SERVICES AGREEMENT

THIS FIFTH ADDENDUM TO PROFESSIONAL SERVICES AGREEMENT (the "Fifth Addendum") is made and entered into this _____ day of 202___, by and between the City of Black Hawk, Colorado (hereinafter referred to as the "City") and One Way, Inc. (hereinafter referred to as "Contractor").

RECITALS:

A. On December 9, 2015 the City and Contractor entered into a Professional Services Agreement (the "Agreement").

B. On January 11, 2017 the City and Contractor entered into the First Addendum to Professional Services Agreement (the "First Addendum").

C. On December 28, 2017 the City and Contractor entered into the Second Addendum to Professional Services Agreement (the "Second Addendum").

D. On January 23, 2019 the City and Contractor entered into the Third Addendum to Professional Services Agreement (the "Third Addendum").

E. On January 22, 2020 the City and Contractor entered into the Fourth Addendum to Professional Services Agreement (the "Fourth Addendum").

F. The parties desire to further extend the Agreement with this Fifth Addendum for one additional year.

AGREEMENT

NOW, THEREFORE, it is hereby agreed that for the consideration hereinafter set forth, that Contractor shall provide to the City, the additional work as needed in the manner provided in this Fifth Addendum.

1. The contract term for the Agreement is hereby extended by this Fifth Addendum for one additional year, from January 1, 2021, through and including December 31, 2021.

2. Contractor shall perform all work as set forth in the Agreement in accordance with Contractor's rate schedule attached hereto as **Exhibit A**, and incorporated by this reference.

3. The original Agreement is in full force and effect and is hereby ratified by the City and the Contractor. The original Agreement, the First Addendum, the Second Addendum, the Third Addendum, the Fourth Addendum, and this Fifth Addendum constitute all of the agreements between the City and the Contractor.

IN WITNESS WHEREOF, the parties hereto each herewith subscribe the same in duplicate.

CITY OF BLACK HAWK, COLORADO

By: _____

ATTEST:

_____
Melissa A. Greiner, City Clerk
City Clerk

~~APPROVED AS TO FORM:~~

_____
Corey Y. Hoffmann
City Attorney

CONTRACTOR

By: _____
Allison Westfall
Print Name

Director 11/19/2020
Title Date

ATTEST:

By: _____
Angel Montoya
Print Name

Routing Manager
Title Date

EXHIBIT A

One Way, Inc.
101 Martin St
Longmont CO 80501

DBA One Way Trash
DBA One Way Disposal

Tuesday, October 13, 2020

CITY OF BLACK HAWK
ATTN PUBLIC WORKS
P.O. BOX 68
BLACK HAWK CO 80422

Account No.: 10477
RE: Notice of Rate Increase
Effective Date: 01/01/2021

Dear City of Black Hawk,

As the beginning of the new year approaches we have revisited the cost of hauling material in your area. Based upon our review, rates in your area will increase as of January 1, 2021.

Since 1993, One Way has brought our community reasonable prices on quality service. We realize that increases in prices may impact your business, but we assure you that this increase is absolutely necessary to cover the cost of collection. We hope to continue our excellent relationship with our clients, and assure you that we will continue to offer our customers superior customer service.

Thank you for your ongoing support and understanding that this increase means that we can continue to maintain our superior standard of service for the coming year.

The rates for 65 customers within the City of Black Hawk are as follows:

$24.04 per resident for weekly collection of 128 gallons trash
$1562.50/month to be billed to the City of Black Hawk
Residents will continue to be responsible for any additional services not covered by the City of Black Hawk.

For inquiries, suggestions, and concerns regarding this increase or our service, do not hesitate to contact customer service at 303-823-0556 or customersupport@onewaytrash.com. We have staff available Monday – Friday 8:00 am – 4:00 pm to assist you with your account.

Sincerely,
Allison Westfall
Director of Operations
One Way, Inc.
(303) 823-0556
Cell:(720)723-0796
Email: Allison.westfall@onewaytrash.com

ONEWA-3 OP ID: B3

CERTIFICATE OF LIABILITY INSURANCE

DATE (MM/DD/YYYY) 12/31/2019

THIS CERTIFICATE IS ISSUED AS A MATTER OF INFORMATION ONLY AND CONFERS NO RIGHTS UPON THE CERTIFICATE HOLDER. THIS CERTIFICATE DOES NOT AFFIRMATIVELY OR NEGATIVELY AMEND, EXTEND OR ALTER THE COVERAGE AFFORDED BY THE POLICIES BELOW. THIS CERTIFICATE OF INSURANCE DOES NOT CONSTITUTE A CONTRACT BETWEEN THE ISSUING INSURER(S), AUTHORIZED REPRESENTATIVE OR PRODUCER, AND THE CERTIFICATE HOLDER.

IMPORTANT: If the certificate holder is an ADDITIONAL INSURED, the policy(ies) must have ADDITIONAL INSURED provisions or be endorsed. If SUBROGATION IS WAIVED, subject to the terms and conditions of the policy, certain policies may require an endorsement. A statement on this certificate does not confer rights to the certificate holder in lieu of such endorsement(s).

PRODUCER 970-482-7747 Brown & Brown Inc 4532 Boardwalk Dr, Suite 200 Fort Collins, CO 80525 Patrick O'Farrell	CONTACT NAME: Patrick O'Farrell PHONE (A/C, No, Ext): 970-482-7747 FAX (A/C, No): 970-484-4165 E-MAIL ADDRESS: certificates@bbcolorado.com
INSURED One Way, Inc. 101 Martin St. Longmont, CO 80501	INSURER(S) AFFORDING COVERAGE — NAIC # INSURER A : Continental Western Ins Co — 10804 INSURER B : Argonaut Insurance Company — 19801 INSURER C : INSURER D : INSURER E : INSURER F :

COVERAGES **CERTIFICATE NUMBER:** **REVISION NUMBER:**

THIS IS TO CERTIFY THAT THE POLICIES OF INSURANCE LISTED BELOW HAVE BEEN ISSUED TO THE INSURED NAMED ABOVE FOR THE POLICY PERIOD INDICATED. NOTWITHSTANDING ANY REQUIREMENT, TERM OR CONDITION OF ANY CONTRACT OR OTHER DOCUMENT WITH RESPECT TO WHICH THIS CERTIFICATE MAY BE ISSUED OR MAY PERTAIN, THE INSURANCE AFFORDED BY THE POLICIES DESCRIBED HEREIN IS SUBJECT TO ALL THE TERMS, EXCLUSIONS AND CONDITIONS OF SUCH POLICIES. LIMITS SHOWN MAY HAVE BEEN REDUCED BY PAID CLAIMS.

INSR LTR	TYPE OF INSURANCE	ADDL INSD	SUBR WVD	POLICY NUMBER	POLICY EFF (MM/DD/YYYY)	POLICY EXP (MM/DD/YYYY)	LIMITS	
A	X COMMERCIAL GENERAL LIABILITY CLAIMS-MADE X OCCUR GEN'L AGGREGATE LIMIT APPLIES PER: POLICY PRO-JECT LOC OTHER:	Y		CPA318258822	01/01/2020	01/01/2021	EACH OCCURRENCE DAMAGE TO RENTED PREMISES (Ea occurrence) MED EXP (Any one person) PERSONAL & ADV INJURY GENERAL AGGREGATE PRODUCTS - COMP/OP AGG	$ 1,000,000 $ 300,000 $ 5,000 $ 1,000,000 $ 2,000,000 $ 2,000,000
	AUTOMOBILE LIABILITY X ANY AUTO OWNED AUTOS ONLY SCHEDULED AUTOS HIRED AUTOS ONLY NON-OWNED AUTOS ONLY			CPA318258822	01/01/2020	01/01/2021	COMBINED SINGLE LIMIT (Ea accident) BODILY INJURY (Per person) BODILY INJURY (Per accident) PROPERTY DAMAGE (Per accident)	$ 1,000,000 $ $ $
	UMBRELLA LIAB OCCUR EXCESS LIAB CLAIMS-MADE DED RETENTION $						EACH OCCURRENCE AGGREGATE	$ $
B	WORKERS COMPENSATION AND EMPLOYERS' LIABILITY ANY PROPRIETOR/PARTNER/EXECUTIVE OFFICER/MEMBER EXCLUDED? (Mandatory in NH) Y / N If yes, describe under DESCRIPTION OF OPERATIONS below	N / A		1020268	01/01/2020	01/01/2021	PER STATUTE OTH-ER E.L. EACH ACCIDENT E.L. DISEASE - EA EMPLOYEE E.L. DISEASE - POLICY LIMIT	$ 500,000 $ 500,000 $ 500,000
A	Equipment Floater			CPA318258822	01/01/2020	01/01/2021		

DESCRIPTION OF OPERATIONS / LOCATIONS / VEHICLES (ACORD 101, Additional Remarks Schedule, may be attached if more space is required)

City of Blackhawk and its officers and employees are additional insureds per forms and conditions on page 2.

CERTIFICATE HOLDER

City of Blackhawk
Director of Public Works
PO Box 68
Blackhawk, CO 80422

CANCELLATION

SHOULD ANY OF THE ABOVE DESCRIBED POLICIES BE CANCELLED BEFORE THE EXPIRATION DATE THEREOF, NOTICE WILL BE DELIVERED IN ACCORDANCE WITH THE POLICY PROVISIONS.

AUTHORIZED REPRESENTATIVE
Patrick O'Farrell

© 1988-2015 ACORD CORPORATION. All rights reserved.
The ACORD name and logo are registered marks of ACORD

If required in a written contract, the following forms apply:

General Liability:
Blanke Additional Insured CLCG0492
Blanket Additional Insured - Completed Operations CG2037
Primary/Noncontributory CG2001
Blanket Waiver of Subrogation CLCG0492

Auto:
Blanket Additional Insured CW3468
Blanket Waiver of Subrogation CW3468

FIFTH ADDENDUM TO PROFESSIONAL SERVICES AGREEMENT

THIS FIFTH ADDENDUM TO PROFESSIONAL SERVICES AGREEMENT (the "Fifth Addendum") is made and entered into this _____ day of_____ 2021, by and between the **City of Black Hawk**, Colorado (hereinafter referred to as the "City") and **Logical Systems, Inc.,** (hereinafter referred to as "Contractor").

RECITALS:

A. On January 27, 2016 the City and Contractor entered into a Professional Services Agreement (the "Agreement").

B. On January 18, 2017 the City and Contractor entered into the First Addendum to Professional Services Agreement (the "First Addendum").

C. On December 13, 2017 the City and Contractor entered into the Second Addendum to Professional Services Agreement (the "Second Addendum").

D. On December 13, 2018 the City and Contractor entered into the Third Addendum to Professional Services Agreement (the "Third Addendum").

E. On January 22, 2020 the City and Contractor entered into the Fourth Addendum to Professional Services Agreement (the "Fourth Addendum").

F. The parties desire to further extend the Agreement with this Fifth Addendum for one additional year.

AGREEMENT

NOW, THEREFORE, it is hereby agreed that for the consideration hereinafter set forth, that Contractor shall provide to the City, the additional work as needed in the manner provided in this Fifth Addendum.

1. The contract term for the Agreement is hereby extended by this Fifth Addendum for one additional year, from January 1, 2021, through and including December 31, 2021.

2. Contractor shall perform all work as set forth in the Agreement in accordance with Contractor's rate schedule attached hereto as **Exhibit A**, and incorporated by this reference.

3. The original Agreement is in full force and effect and is hereby ratified by the City and the Contractor. The original Agreement, the First Addendum, the Second Addendum, the Third Addendum, the Fourth Addendum, and this Fifth Addendum constitute all of the agreements between the City and the Contractor.

IN WITNESS WHEREOF, the parties hereto each herewith subscribe the same in duplicate.

CITY OF BLACK HAWK, COLORADO

By: _____
David D. Spellman, Mayor

ATTEST:

_____
Melissa A. Greiner, City Clerk
City Clerk

APPROVED AS TO FORM:

_____
Corey Y. Hoffmann
City Attorney

LOGICAL SYSTEMS, Inc.

By: Lentz Catlin
Lentz Catlin
Print Name
Chief Admin Officer 12/3/20
Title Date

ATTEST:

By: Patience Taylor
Patience Taylor
Print Name
Contract Admin 12/3/2020
Title Date

LOGICAL SYSTEMS, LLC.
2756 Appling Center Cove
Memphis, TN 38133
PH: (901) 377-5574 FAX: (901) 377-1812

LSI Standard Rate Sheet

Effective January 1, 2021 through December 31, 2021

Classification / Title	Hourly Rate
Engineer	
Intern	$ 39.00
Level I	$ 82.50
Level II	$ 108.50
Level III	$ 120.00
Level IV / Senior	$ 135.00
Level V / Lead	$ 149.00
DCS Software Developer / Programmer	
Level I	$ 88.50
Level II	$ 111.50
Level III	$ 125.00
Level IV / Senior	$ 140.00
Level V / Lead	$ 153.00
Controls Engineering	
Level I	$ 88.50
Level II	$ 111.50
Level III	$ 125.00
Level IV / Senior	$ 140.00
Level V / Lead	$ 153.00
Process Engineering	
Level I	$ 90.50
Level II	$ 115.00
Level III	$ 129.00
Level IV	$ 146.00
Level V	$ 164.00
ERP / MES Developer	
Level I	$ 143.00
Level II	$ 160.00
Level III	$ 175.00
Level IV / Senior	$ 200.00
CADD Specialist	
Level I	$ 42.00
Level II	$ 65.00
Level III	$ 73.00
Level IV	$ 85.00

Classification / Title	Hourly Rate
Designer / Controls Technician	
Level I	$ 90.00
Level II	$ 100.00
Level III / Senior	$ 114.50
Level IV / Lead	$ 125.00
Field Engineer / Controls Specialist	
Level I	$ 87.50
Level II	$ 98.00
Level III	$ 111.50
Level IV	$ 126.00
Level V / Lead	$ 132.00
Project Manager / Construction Manager	
Level I	$ 104.50
Level II	$ 120.00
Level III	$ 135.50
Level IV / Senior	$ 147.00
Level V / Lead	$ 159.00
Safety Coordinator	$ 80.00
Safety Professional	$ 107.50
Principal Engineer / Engineering Manager	$ 165.00
Executive Engineer	$ 200.00
Project Support	
Level I / Clerical	$ 38.50
Level II / Project Admin	$ 52.50
Project Contracts / Procurement Specialist	
Level I	$ 74.00
Level II	$ 92.50
Level III	$ 111.50
Fabrication / Field Technician	
Level I	$ 39.00
Level II	$ 52.50
Level III	$ 68.00
Level IV	$ 79.50
Service Call Support (Minimum 4hrs)	$ 227.50

Over eight hours in 24-hour period.....1.5 times the hourly rate.
Over 40 hours in 5 days.....1.5 times the hourly rate.
National holiday and Sunday.....2.0 times the hourly rate.

- No overtime without customer approval.
- Travel time will be billed at the regular rate portal to portal
- Auto mileage billed at the IRS set amount.
- If an employee is required to be on site in excess of 2 weeks, normal expenses will include round trip transportation home once every two weeks
- In addition to the above hourly rates LSI will also charge 1.5% of the open invoice amount every 30th day from the invoice due date. Invoices shall be considered open until good funds are received by LSI. Notwithstanding any provisions in the contract or subsequent purchase orders to the contrary, LSI shall be allowed to assess and collect these charges on all projects to which this rate sheet is agreed to as part of the proposal or contract.

FIFTH ADDENDUM TO PROFESSIONAL SERVICES AGREEMENT

THIS FIFTH ADDENDUM TO PROFESSIONAL SERVICES AGREEMENT ("Fifth Addendum") is made and entered into this day of 2021, by and between the **City of Black Hawk**, Colorado (hereinafter referred to as the "City") and Leonard Rice Engineers, Inc. doing business as **LRE Water.** (hereinafter referred to as "Consultant").

RECITALS:

A. On January 27, 2016 the City and Consultant entered into a Professional Services Agreement (the "Agreement").

B. On January 11, 2017 the City and Consultant entered into the First Addendum to Professional Services Agreement ("First Addendum").

C. On December 13, 2018 the City and Consultant entered into the Second Addendum to Professional Services Agreement ("Second Addendum").

D. On January 23, 2019 the City and Consultant entered into the Third Addendum to Professional Services Agreement ("Third Addendum").

E. On January 20, 2020 the City and Consultant entered into the Fourth Addendum to Professional Services Agreement ("Fourth Addendum").

F. The parties desire to further extend the Agreement with this Fifth Addendum for one additional year.

AGREEMENT

NOW, THEREFORE, it is hereby agreed that for the consideration hereinafter set forth, that Consultant shall provide to the City, the additional work as needed in the manner provided in this Fifth Addendum.

1. The contract term for the Agreement is hereby extended by this Fifth Addendum for one additional year, from January 1, 2021, through and including December 31, 2021.

2. Consultant shall perform all work as set forth in the Scope of Services, attached hereto as **Exhibit A**, in accordance with Consultant rate schedule attached hereto as **Exhibit B**, both incorporated by this reference and in accordance with the Agreement.

3. The original Agreement is in full force and effect and is hereby ratified by the City and the Consultant. The original Agreement, the First Addendum, the Second Addendum, the Third Addendum, the Fourth Addendum, and this Fifth Addendum constitute all of the agreements between the City and the Consultant.

IN WITNESS WHEREOF, the parties hereto each herewith subscribe the same in duplicate.

CITY OF BLACK HAWK, COLORADO

By: _____
David D. Spellman, Mayor

ATTEST:

_____
Melissa A. Greiner, City Clerk
City Clerk

APPROVED AS TO FORM:

_____
Corey Y. Hoffmann
City Attorney

LRE Water

By: R. Gregory Roush

R. Gregory Roush, P.E.
Print Name

Principal 12/15/2020
Title Date

ATTEST:

By: Janet P Williams

Janet P. Williams, P.E.
Print Name

Board Chair 12/15/2020
Title Date

EXHIBIT A

LRE Water
SCOPE OF SERVICES

In accordance with your request, LRE Water (LRE) is pleased to provide the following description of services to assist the City of Black Hawk with water resources planning and water rights related tasks in calendar year 2021:

- **Task 925BLH01**: LRE will assist the City of Black Hawk with general water supply matters related to planning, water quality, and regulatory issues for the City of Black Hawk, as directed by the City. Budget estimate: **$25,000**.
    - General Planning: Provide general water quality, regulatory, and ground water consulting as requested. Projects requiring budget amounts over and above the budget estimate will be performed upon the request and authorization of the City.
    - Water Quality Stipulation: Additional services may include addressing water quality issues related to data analysis for the Standley Lake Cities and the settlement stipulation and agreements in Case No. 94CW036, and participation in discussions with Standley Lake Cities re: modifications to existing Standley Lake Agreement for water quality standards implementation.
- **Task 925BLH02**: LRE will assist the City of Black Hawk and water rights counsel with water rights and water supply planning matters. Budget estimate: **$295,000**.
    - General Planning: Provide general water resources planning and consulting; continuing assistance with Georgetown Lake and Green Lake issues; review of opportunities to participate in water projects or to purchase or lease water rights offered for sale to the City or requested from the City; and assistance with planning for proposed water projects, including assistance with the US Army Corps of Engineers permitting effort.
    - Water Rights Applications: Provide engineering support for Black Hawk water right applications, including diligence applications; represent Black Hawk's interests in providing review and comment on guidelines proposed by the State and Division Engineers' Offices; review of applications of other entities, including SWSP applications and water rights applications, and provide comments or engineering on selected cases, to help protect Black Hawk's water right interests (preparation for and participation in trials would require additional budget).
    - Accounting and Operations: Preparation and distribution of weekly and monthly accounting reports of water use for the Water Commissioner, reporting on the amount of water diverted under the City's water rights, and reporting on replacement water provided as required by decrees. Update accounting to reflect new decrees and/or information requested by the Division Engineer. Coordination of water operations.
- This contract authorizes LRE to perform the above services up to a budget of **$320,000**. If these or other services require additional time and budget, they will be performed as requested and upon authorization. As the project proceeds and additional facts are discovered, it may be necessary to perform additional services and some items described may not be needed.
- We will bill the City for the actual time spent on the tasks performed, at the rates in effect at the time service is rendered. The LRE rate schedule currently in effect is attached as **Exhibit B**.

EXHIBIT B

LRE WATER

2021 RATE SCHEDULE

Effective December 26, 2020

	Hourly Rate
Student Intern	$65- $90
Data Processor/Admin Support	$75 - $130
Technician/IT Support	$100 - $135
Staff I Engineer/Hydrologist/Geologist/Scientist	$100 - $135
Staff II Engineer/Hydrologist/Geologist/Scientist	$115 - $145
Staff III Engineer/Hydrologist/Geologist/Scientist	$135 - $170
Project Engineer/Hydrologist/Geologist/Scientist	$155 - $180
Senior Project Engineer/Hydrologist/Geologist/Scientist	$160 - $190
Project Manager	$165 - $200
Senior Project Manager	$170 - $255
Principal, Senior Advisor	$200 - $270

Expenses such as laboratory analysis, obtaining aerial photos, or other special services incurred directly in connection with the project are billed at cost plus 5 percent to cover handling and administration. Reimbursable expenses billed at cost include airfare, automobile rental, and other travel or per diem costs including mileage billed at the current IRS rate (rounded up to the nearest $0.05). Subconsultants to LRE are billed at cost plus 10 percent.

Client#: 97023 LREWATER

ACORD™ CERTIFICATE OF LIABILITY INSURANCE

DATE (MM/DD/YYYY) 9/09/2020

THIS CERTIFICATE IS ISSUED AS A MATTER OF INFORMATION ONLY AND CONFERS NO RIGHTS UPON THE CERTIFICATE HOLDER. THIS CERTIFICATE DOES NOT AFFIRMATIVELY OR NEGATIVELY AMEND, EXTEND OR ALTER THE COVERAGE AFFORDED BY THE POLICIES BELOW. THIS CERTIFICATE OF INSURANCE DOES NOT CONSTITUTE A CONTRACT BETWEEN THE ISSUING INSURER(S), AUTHORIZED REPRESENTATIVE OR PRODUCER, AND THE CERTIFICATE HOLDER.

IMPORTANT: If the certificate holder is an ADDITIONAL INSURED, the policy(ies) must have ADDITIONAL INSURED provisions or be endorsed. If SUBROGATION IS WAIVED, subject to the terms and conditions of the policy, certain policies may require an endorsement. A statement on this certificate does not confer any rights to the certificate holder in lieu of such endorsement(s).

PRODUCER Greyling Ins. Brokerage/EPIC 3780 Mansell Rd. Suite 370 Alpharetta, GA 30022	CONTACT NAME: Trudy Henry PHONE (A/C, No, Ext): 770.552.4225 FAX (A/C, No): 866.550.4082 E-MAIL ADDRESS: trudy.henry@greyling.com	
	INSURER(S) AFFORDING COVERAGE	NAIC #
	INSURER A : Beazley Syndicates	37540
INSURED Leonard Rice Consulting Water Engineers, Inc DBA LRE Water 1221 Auraria Parkway Denver, CO 80204	INSURER B : Hartford Accident & Indemnity Company	22357
	INSURER C :	
	INSURER D :	
	INSURER E :	
	INSURER F :	

COVERAGES **CERTIFICATE NUMBER: 20-21** **REVISION NUMBER:**

THIS IS TO CERTIFY THAT THE POLICIES OF INSURANCE LISTED BELOW HAVE BEEN ISSUED TO THE INSURED NAMED ABOVE FOR THE POLICY PERIOD INDICATED. NOTWITHSTANDING ANY REQUIREMENT, TERM OR CONDITION OF ANY CONTRACT OR OTHER DOCUMENT WITH RESPECT TO WHICH THIS CERTIFICATE MAY BE ISSUED OR MAY PERTAIN, THE INSURANCE AFFORDED BY THE POLICIES DESCRIBED HEREIN IS SUBJECT TO ALL THE TERMS, EXCLUSIONS AND CONDITIONS OF SUCH POLICIES. LIMITS SHOWN MAY HAVE BEEN REDUCED BY PAID CLAIMS.

INSR LTR	TYPE OF INSURANCE	ADDL INSR	SUBR WVD	POLICY NUMBER	POLICY EFF (MM/DD/YYYY)	POLICY EXP (MM/DD/YYYY)	LIMITS	
A	X COMMERCIAL GENERAL LIABILITY			ENC000499801	09/01/2020	09/01/2021	EACH OCCURRENCE	$2,000,000
	CLAIMS-MADE [ ] OCCUR						DAMAGE TO RENTED PREMISES (Ea occurrence)	$100,000
	GEN'L AGGREGATE LIMIT APPLIES PER:						MED EXP (Any one person)	$25,000
	POLICY [X] PRO-JECT [ ] LOC						PERSONAL & ADV INJURY	$2,000,000
	OTHER:						GENERAL AGGREGATE	$4,000,000
							PRODUCTS - COMP/OP AGG	$4,000,000
								$
	AUTOMOBILE LIABILITY			20UEGEF8313	09/01/2020	09/01/2021	COMBINED SINGLE LIMIT (Ea accident)	$1,000,000
	X ANY AUTO						BODILY INJURY (Per person)	$
	OWNED AUTOS ONLY [ ] SCHEDULED AUTOS						BODILY INJURY (Per accident)	$
	X HIRED AUTOS ONLY X NON-OWNED AUTOS ONLY						PROPERTY DAMAGE (Per accident)	$
								$
A	[ ] UMBRELLA LIAB [ ] OCCUR			ENX000499901	09/01/2020	09/01/2021	EACH OCCURRENCE	$2,000,000
	X EXCESS LIAB X CLAIMS-MADE						AGGREGATE	$2,000,000
	DED [ ] RETENTION $							$
B	WORKERS COMPENSATION AND EMPLOYERS' LIABILITY ANY PROPRIETOR/PARTNER/EXECUTIVE OFFICER/MEMBER EXCLUDED? Y/N N (Mandatory in NH) If yes, describe under DESCRIPTION OF OPERATIONS below	N/A		20WEGAH1ACN	09/01/2020	09/01/2021	X PER STATUTE [ ] OTH-ER	
							E.L. EACH ACCIDENT	$1,000,000
							E.L. DISEASE - EA EMPLOYEE	$1,000,000
							E.L. DISEASE - POLICY LIMIT	$1,000,000
A	Professional Liab			ENC000499801	09/01/2020	09/01/2021	Per Claim/Agg $2,000,00	
A	Pollution Liab			ENC000499801	09/01/2020	09/01/2021	Per Claim $2,000,000 Aggregate $4,000,000	

DESCRIPTION OF OPERATIONS / LOCATIONS / VEHICLES (ACORD 101, Additional Remarks Schedule, may be attached if more space is required)

CERTIFICATE HOLDER

City Of Black Hawk
Attn: Thomas Isbester
Public Works Dir.
987 Miners Mesa Road
Blackhawk, CO 80422

CANCELLATION

SHOULD ANY OF THE ABOVE DESCRIBED POLICIES BE CANCELLED BEFORE THE EXPIRATION DATE THEREOF, NOTICE WILL BE DELIVERED IN ACCORDANCE WITH THE POLICY PROVISIONS.

AUTHORIZED REPRESENTATIVE

Dan N. Collings

© 1988-2015 ACORD CORPORATION. All rights reserved.

AGREEMENT FOR PROFESSIONAL SERVICES

THIS AGREEMENT is made and entered into this ___ day of _____, 2021, by and between the **CITY OF BLACK HAWK**, State of Colorado, a Colorado municipal corporation (hereinafter referred to as the "City") and Lumin8 Transportation Technologies hereinafter referred to as "Contractor").

RECITALS:

A. The City requires miscellaneous professional and technical services for the ongoing maintenance and repair of traffic signals, highway lights, and associated appurtenances on an annual, quarterly, and on-call basis throughout the year (the Project").

B. Contractor has held itself out to the City as having the requisite expertise and experience to perform the required work for the Project.

NOW, THEREFORE, it is hereby agreed for the consideration hereinafter set forth, that Contractor shall provide to the City, ongoing maintenance and repair of traffic signals, highway lights, and associated appurtenances for the Project.

I. SCOPE OF SERVICES

Contractor shall complete the scope of services as described in **Exhibit A** attached hereto and incorporated herein by this reference. Contractor shall furnish all labor and materials to perform the work and services required for the complete and prompt execution and performance of all duties, obligations, and responsibilities for the Project.

II. THE CITY'S OBLIGATIONS/CONFIDENTIALITY

The City shall provide Contractor with reports and such other data as may be available to the City and reasonably required by Contractor to perform hereunder. No project information shall be disclosed by Contractor to third parties without the prior written consent of the City or pursuant to a lawful court order directing such disclosure. All documents provided by the City to Contractor shall be returned to the City. Contractor is authorized by the City to retain copies of such data and materials at Contractor's expense.

III. OWNERSHIP OF WORK PRODUCT

The City acknowledges that Contractor's documents produced under this Agreement are instruments of professional services. Nevertheless, upon payment to Contractor pursuant to this Agreement, all work, data, drawings, designs, plans, reports, computer programs (non-proprietary), computer input and output, analyses, tests, maps, surveys, or any other materials developed for this Project are, and shall be, the sole and exclusive property of the City. However, any reuse of the documents by the City without prior written authorization by Contractor other than for the specific intended purpose of this Agreement will be at the City's sole risk. Contractor will provide the City with a ten (10) day written notice prior to disposal of Project documents it has retained, during which time the City may take physical possession of same at the storage site.

IV. COMPENSATION

A. Compensation shall primarily be on a Time and Materials basis for the work described in **Exhibit A**. Payment shall be made in accordance with the schedule of charges in **Exhibit A-1**. Invoices will be itemized and include hourly breakdown for all personnel and other charges.

B. Contractor may submit monthly or periodic statements requesting payment. Such request shall be based upon the amount and value of the work and services performed by Contractor under this Agreement except as otherwise supplemented or accompanied by such supporting data as may be required by the City.

1. All invoices, including Contractor's verified payment request, shall be submitted by Contractor to the City no later than the twenty-fourth (24th) day of each month for payment pursuant to the terms of this Agreement. In the event Contractor fails to submit any invoice on or before the twenty-fourth (24th) day of any given month, Contractor defers its right to payment pursuant to said late invoice until the twenty-fourth (24th) day of the following month.

2. Progress payments may be claimed on a monthly basis for reimbursable costs actually incurred to date as supported by detailed statements, including hourly breakdowns for all personnel and other charges. The amounts of all such monthly payments shall be paid within thirty (30) days after the timely receipt of invoice as provided by this Agreement.

C. The City has the right to ask for clarification on any Contractor invoice after receipt of the invoice by the City.

D. In the event payment for services rendered has not been made within forty-five (45) days from the receipt of the invoice for any uncontested billing, interest will accrue at the legal rate of interest. In the event payment has not been made within ninety (90) days from the receipt of the invoice for any uncontested billing, Contractor may, after giving seven (7) days written notice and without penalty or liability of any nature, suspend all work on all authorized services specified herein. In the event payment in full is not received within thirty (30) days of giving the seven (7) days written notice, Contractor may terminate this Agreement. Upon receipt of payment in full for services rendered, Contractor will continue with all authorized services.

E. Final payment shall be made within sixty (60) calendar days after all data and reports (which are suitable for reproduction and distribution by the City) required by this Agreement have been turned over to and approved by the City and upon receipt by the City of Contractor's certification that services required herein by Contractor have been fully completed in accordance with this Agreement and all data and reports for the Project.

V. COMMENCEMENT AND COMPLETION OF WORK

Contractor shall commence work upon the execution of this Agreement. This Agreement shall be completed by December 31, 2021.

VI. PROFESSIONAL RESPONSIBILITY

A. Contractor hereby represents that it is qualified to assume the responsibilities and render the services described herein and has all requisite corporate authority and professional licenses in good standing, required by law.

B. The work performed by Contractor shall be in accordance with generally accepted professional practices and the level of competency presently maintained by other practicing professional firms in the same or similar type of work in the applicable community.

C. Contractor shall be responsible for the professional quality, technical accuracy, timely completion, and coordination of all designs, drawings, specifications, reports, and other services furnished by Contractor under this Agreement. Contractor shall, without additional compensation, correct or resolve any errors or deficiencies in its designs, drawings, specifications, reports, and other services which fall below the standard of professional practice.

D. Approval by the City of drawings, designs, specifications, reports, and incidental work or materials furnished hereunder shall not in any way relieve Contractor of responsibility for technical adequacy of the work. Neither the City's review, approval, or acceptance of, nor payment for, any of the services shall be construed to operate as a waiver of any rights under this Agreement, and Contractor shall be and remain liable in accordance with applicable performance of any of the services furnished under this Agreement.

E. The rights and remedies of the City provided for under this Agreement are in addition to any other rights and remedies provided by law.

VII. COMPLIANCE WITH LAW

A. The work and services to be performed by Contractor hereunder shall be done in compliance with applicable laws, ordinances, rules, and regulations.

B. Illegal Aliens.

1. Certification. By entering into this Agreement, Contractor hereby certifies that, at the time of this certification, it does not knowingly employ or contract with an illegal alien who will perform work under the Agreement and that Contractor will participate in either the E-Verify Program administered by the United States Department of Homeland Security and Social Security Administration or the Department Program administered by the Colorado Department of Labor and Employment in order to confirm the employment eligibility of all employees who are newly hired for employment to perform work under the Agreement.

2. Prohibited Acts. Contractor shall not:

a. Knowingly employ or contract with an illegal alien to perform work under this Agreement; or

b. Enter into a contract with a subcontractor that fails to certify to Contractor that the subcontractor shall not knowingly employ or contract with an illegal alien to perform work under this Agreement.

3. Verification.

a. Contractor has confirmed the employment eligibility of all employees who are newly hired for employment to perform work under this Agreement through participation in either the E-Verify Program or the Department Program.

b. Contractor shall not use the E-Verify Program or the Department Program procedures to undertake pre-employment screening of job applicants while this Agreement is being performed.

c. If Contractor obtains actual knowledge that a subcontractor performing work under this Agreement knowingly employs or contracts with an illegal alien who is performing work under the Agreement, Contractor shall:

i. Notify the subcontractor and the City within three (3) days that Contractor has actual knowledge that the subcontractor is employing or contracting with an illegal alien who is performing work under the Agreement; and

ii. Terminate the subcontract with the subcontractor if within three (3) days of receiving the notice required pursuant to subparagraph (i) hereof, the subcontractor does not stop employing or contracting with the illegal alien who is performing work under the Agreement; except that Contractor shall not terminate the contract with the subcontractor if during such three (3) days the subcontractor provides information to establish that the subcontractor has not knowingly employed or contracted with an illegal alien who is performing work under the Agreement.

4. Duty to Comply with Investigations. Contractor shall comply with any reasonable request by the Colorado Department of Labor and Employment made in the course of an investigation conducted pursuant to C.R.S. § 8-17.5-102(5)(a) to ensure that Contractor is complying with the terms of this Agreement.

5. If Contractor does not currently employ any employees, Contractor shall sign the No Employee Affidavit attached hereto.

6. If Contractor wishes to verify the lawful presence of newly hired employees who perform work under the Agreement via the Department Program, Contractor shall sign the Department Program Affidavit attached hereto.

VIII. INDEMNIFICATION

A. INDEMNIFICATION – GENERAL: The City cannot and by this Agreement does not agree to indemnify, hold harmless, exonerate or assume the defense of the Contractor or any other person or entity whatsoever, for any purpose whatsoever. Provided that the claims, demands, suits, actions or proceedings of any kind are not the result of professional negligence, the Contractor, to the fullest extent permitted by law, shall defend, indemnify and hold harmless the City, its Council members, officials, officers, directors, agents and employees from any and all claims, demands, suits, actions or proceedings of any kind or nature whatsoever, including worker's compensation claims, in any way resulting from or arising from the services rendered by Contractor, its employees, agents or sub-contractors, or others for whom the Contractor is legally liable, under this Agreement; provided, however, that the Contractor need not indemnify or save harmless the City, its Council members, its officers, agents and employees from damages resulting from the negligence of the Council members, officials, officers, directors, agents and employees.

B. INDEMNIFICATION FOR PROFESSIONAL NEGLIGENCE: The Contractor shall, to the fullest extent permitted by law, defend, indemnify and hold harmless the City, its Council members, and any of its officials, officers, directors, and employees from and against damages, liability, losses, costs and expenses, including reasonable attorney's fees, but only to the extent caused by or arising out of the negligent acts, errors or omissions of the Contractor, its employees, agents or subcontractors, or others for whom the Contractor is legally liable, in the performance of professional services under this Agreement. The Contractor is not obligated under this subparagraph VIII.B. to indemnify the City for the negligent acts of the City, its Council members, or any of its officials, officers, directors, agents and employees.

C. INDEMNIFICATION – COSTS: Contractor shall, to the fullest extent permitted by law, defend, investigate, handle, respond to, and provide defense for and defend against, any such liability, claims or demands at the sole expense of Contractor or, at the option of the City, agrees to pay the City or reimburse the City for the defense costs incurred by the City in connection with any such liability, claims or demands. Contractor shall, to the fullest extent permitted by law, defend and bear all other costs and expenses related thereto, including court costs and attorney fees, whether or not any such liability, claims or demands alleged are groundless, false or fraudulent. If it is determined by the final judgment of a court of any competent jurisdiction that such injury, loss or damage was caused in whole or in part by the act, omission or other fault of the City, its Council members, officials, officers, directors, agents and employees, the City shall reimburse Contractor for the portion of the judgment attributable to such act, omission or other fault of the City, its Council members, officials, officers, directors, agents and employees.

IX. INSURANCE

A. The Contractor agrees to obtain and maintain during the life of the Agreement, a policy or policies of insurance against all liability, claims, demands and other obligations assumed by the Contractor pursuant to Section VIII above. Such insurance shall be in addition to any other insurance requirements imposed by the Agreement or by law. The Contractor shall not be relieved of any liability, claims, demands, or other obligations assumed pursuant to Section VIII above, by reason of its failure to obtain and maintain during the life of the Agreement insurance in sufficient amounts, durations, or types.

B. Contractor shall obtain and maintain during the life of the Agreement, and shall cause any subcontractor to obtain and maintain during the life of the Agreement, the minimum insurance coverages listed below. Such coverages shall be obtained and maintained with forms and insurers acceptable to the City. All coverages shall be continuously maintained to cover all liability, claims, demands and other obligations assumed by the Contractor pursuant to Section VIII above. In the case of any claims-made policy, the necessary retroactive dates and extended reporting periods shall be procured to maintain such continuous coverage.

1. **Worker's Compensation Insurance** to cover obligations imposed by applicable law for any employee engaged in the performance of the work under the Agreement, and Employers Liability Insurance with minimum limits of six hundred thousand dollars ($600,000) each incident, one million dollars ($1,000,000) disease—policy limit, and one million dollars ($1,000,000) disease—each employee. Evidence of qualified self-insured status may be substituted for the worker's compensation requirements under this paragraph.

2. **Commercial general liability insurance** with minimum combined single limits of six hundred thousand dollars ($600,000) each occurrence and one million dollars ($1,000,000) general aggregate. The policy shall be applicable to all premises and operations. The policy shall include coverage for bodily injury broad form property damage (including completed operations), personal injury (including coverage for contractual and employee acts), blanket contractual products, and completed operations. This policy shall contain a severability of interests provision.

3. **Professional liability insurance** with minimum limits of six hundred, thousand dollars ($600,000) each claim and one million dollars ($1,000,000) general aggregate.

4. **The policy required by paragraph 2., above, shall be endorsed to include the City and the City's officers, employees, and Contractors as additional insureds**. The policy required in Paragraphs 1 and 2 above shall be primary insurance, and any insurance carried by the City, its officers, its employees, or its Contractors shall be excess and not contributory insurance to that provided by Contractor. No additional insured endorsement to the policy required by paragraph 1., above, shall contain any exclusion for bodily injury or property damage arising from completed operations. Contractor shall be solely responsible for any deductible losses under any policy required above.

5. The certificate of insurance provided for the City shall be completed by Contractor's insurance agent as evidence that policies providing the required coverages, conditions, and minimum limits are in full force and effect, and shall be reviewed and approved by the City prior to commencement of the Agreement. No other form of certificate shall be used. The certificate shall identify this Agreement and shall provide that the coverages afforded under the policies shall not be cancelled, terminated, or materially changed until at least thirty (30) days prior written notice has been given to the City. The completed certificate of insurance shall be sent to:

City of Black Hawk
P.O. Box 68
Black Hawk, Colorado 80422-0068
Attn: City Clerk

6. Failure on the part of Contractor to procure or maintain policies providing the required coverages, conditions, and minimum limits shall constitute a material breach of agreement upon which the City may immediately terminate this Agreement, or at its discretion, the City may procure or renew any such policy or any extended reporting period thereto and may pay any and all premiums in connection therewith, and all monies so paid by the City shall be repaid by Contractor to the City upon demand, or the City may offset the cost of the premiums against any monies due to Contractor from the City.

7. The City reserves the right to request and receive a certified copy of any policy and any endorsement thereto.

8. The parties hereto understand and agree that the City, its officers, and its employees, are relying on, and do not waive or intend to waive by any provision of this Agreement, the monetary limitations or any other rights, immunities, and protections provided by the Colorado Governmental Immunity Act, Colo. Rev. Stat. §24-10-114 et seq., 13 Colo. Rev. Stat., as from time to time amended, or otherwise available to the City, its officers, its employees, or agents.

X. NON-ASSIGNABILITY

Neither this Agreement, nor any of the rights or obligations of the parties hereto, shall be assigned by either party without the written consent of the other.

XI. TERMINATION

This Agreement shall terminate upon the City's providing Contractor with thirty (30) days advance written notice. In the event the Agreement is terminated by the City's issuance of said written notice of intent to terminate, the City shall pay Contractor for all work previously authorized and completed prior to the date of termination. If, however, Contractor has substantially or materially breached the standards and terms of this Agreement, the City shall have any remedy or right of set-off available at law and equity. If the Agreement is terminated for any reason other than cause prior to completion of the Project, any use of documents by the City thereafter shall be at the City's sole risk, unless otherwise consented to by Contractor.

XII. VENUE

This Agreement shall be governed by the laws of the State of Colorado, and any legal action concerning the provisions hereof shall be brought in the County of Gilpin, State of Colorado.

XIII. INDEPENDENT CONTRACTOR

Contractor is an independent contractor. Notwithstanding any provision appearing in this Agreement, all personnel assigned by Contractor to perform work under the terms of this Agreement shall be, and remain at all times, employees or agents of Contractor for all purposes. Contractor shall make no representation that it is the employee of the City for any purpose.

XIV. NO WAIVER

Delays in enforcement or the waiver of any one or more defaults or breaches of this Agreement by the City shall not constitute a waiver of any of the other terms or obligations of this Agreement.

XV. NOTICE

Any notice or communication between Contractor and the City which may be required, or which may be given, under the terms of this Agreement, shall be in writing and shall be deemed to have been sufficiently given when directly presented or sent pre-paid, first class United States Mail, addressed as follows:

The City:

City of Black Hawk
P.O. Box 68
Black Hawk, Colorado 80422-0068
Attn: City Clerk

The Contractor:

Lumin8 Transportation Technologies
5920 Lamar Street
Arvada, CO 80003
Attn: Tim Leach, Operations Manager

XVI. ENTIRE AGREEMENT

This Agreement and the attached exhibits constitute the entire Agreement between Contractor and the City, superseding all prior oral or written communications. None of the provisions of this Agreement may be amended, modified, or changed, except as specified herein.

IN WITNESS WHEREOF, the parties hereto each herewith subscribe the same in duplicate.

CITY OF BLACK HAWK, COLORADO

By: _____
Thomas Isbester, Public Works Director

ATTEST:

_____
Melissa A. Greiner, CMC
City Clerk

APPROVED AS TO FORM:

_____
Corey Y. Hoffmann, City Attorney

Lumin8 Transportation Technologies

By: _____

Its: Tim Leach / Operations Manager

STATE OF COLORADO)
) ss.
COUNTY OF Jefferson)

The foregoing instrument was subscribed, sworn to, and acknowledged before me this 23rd day of December, 2020, by Tim Leach as the Operations Manager of Lumin8.

My commission expires: 01/08/2025

(S E A L)

BARBARA WRIGHT
NOTARY PUBLIC
STATE OF COLORADO
NOTARY ID 20004034696
MY COMMISSION EXPIRES JANUARY 8, 2025

_____
Notary Public

PROSPECTIVE CONTRACTOR'S CERTIFICATE REGARDING EMPLOYING OR CONTRACTING WITH AN ILLEGAL ALIEN

FROM: Tim Leach, Operations Manager
Lumin8 Transportation Technologies

TO: City of Black Hawk
P.O. Box 68
Black Hawk, Colorado 80422-0068

Project Name 2021 Traffic Signal Maintenance

Bid Number _____ Project No. _____

As a prospective Contractor for the above-identified bid, I (we) do hereby certify that, as of the date of this certification, I (we) do not knowingly employ or contract with an illegal alien who will perform work under the Agreement and that I (we) will confirm the employment eligibility of all employees who are newly hired for employment to perform work under the Agreement through participation in either the E-Verify Program administered by the United States Department of Homeland Security and Social Security Administration or the Department Program administered by the Colorado Department of Labor and Employment.

Executed this 8th day of January, 2021

Prospective Contractor Lumin8 Transportation Technologies LLC

By: _____

Title: Tim Leach, Operations Manager

NO EMPLOYEE AFFIDAVIT

1. Check and complete one:

☐ I, _____, am a sole proprietor doing business as _____. I do not currently employ any individuals. Should I employ any individuals during the term of my Agreement with the City, I certify that I will comply with the lawful presence verification requirements outlined in that Agreement.

OR

☐ I, _____, am an owner/member/shareholder of _____, a _____[specify type of entity-*i.e.*, corporation, limited liability company], that does not currently employ any individuals. Should I employ any individuals during the term of my Agreement with the City, I certify that I will comply with the lawful presence verification requirements outlined in that Agreement.

2. Check one.

☐ I, _____, am a United States citizen or legal permanent resident.

The City must verify this statement by reviewing one of the following items:

- *A valid Colorado Driver's license or a Colorado identification card*
- *A United States military card or a military dependent's identification card*
- *A United States Coast Guard Merchant Mariner card*
- *A Native American tribal document or*
- *In the case of a resident of another state, the driver's license or state-issued identification card from the state of residence, if that state requires the applicant to prove lawful presence prior to the issuance of the identification card*
- *Any other documents or combination of documents listed in the City's "Acceptable Documents for Lawful Presence Verification" chart that prove both the contractor's citizenship/lawful presence and identity.*

OR

☐ I am otherwise lawfully present in the United States pursuant to federal law.

Contractor must verify this statement through the federal systematic alien verification of entitlement program, the "SAVE" program, and provide such verification to the City.

_____ _____

Signature Date

DEPARTMENT PROGRAM AFFIDAVIT

(To be completed if Contractor participates in the Department of Labor Lawful Presence Verification Program)

I, Tim Leach, as a public contractor under contract with the City of Black Hawk (the "City"), hereby affirm that:

1. I have examined or will examine the legal work status of all employees who are newly hired for employment to perform work under this public contract for services ("Contract") with the Town within twenty (20) days after such hiring date;

2. I have retained or will retain file copies of all documents required by 8 U.S.C. § 1324a, which verify the employment eligibility and identity of newly hired employees who perform work under the Agreement; and

3. I have not and will not alter or falsify the identification documents for my newly hired employees who perform work under the Agreement.

Contractor Signature Tim Leach / Operations Manager

12-22-2020
Date

STATE OF COLORADO)
) ss.
COUNTY OF Jefferson)

The foregoing instrument was subscribed, sworn to and acknowledged before me this 22nd day of December, 2020 by Tim Leach as Operations Mgr. of Lemins.

My commission expires:

(SEAL)

BARBARA WRIGHT
NOTARY PUBLIC
STATE OF COLORADO
NOTARY ID 20004034696
MY COMMISSION EXPIRES JANUARY 8, 2025

Barbara Wright
Notary Public

ACCEPTABLE DOCUMENTS FOR LAWFUL PRESENCE VERIFICATION

Documents that Serve to Prove Citizenship/Lawful Presence and Identification:

- Colorado Driver's License or Identification Card
- Out of State drivers license from: AL, AZ, AR, CA, CT, DE, DC, FL, GA, ID, IN, IA, KS, KY, LA, ME, MN, MS, MO, MT, NV, NH, NJ, NY, ND, OH, OK, PA, RI, SC, SD, VA, WV, WY
- A United States Military Card of a Military Dependent's Identification Card
- A United States Coast Guard or Merchant Mariner Card
- A Native American Tribal Document
- Certificate of Naturalization with Photograph
- Certificate of U.S. Citizenship with Photograph
- U.S. Passport (less than 5 years old)
- Northern Mariana Identification Card with Photograph

OR

Documents that Only Serve to Prove Citizenship/Lawful Presence:

- U.S. Birth Certificate
- Certification of Report of Birth from Department of State
- Report of Birth Abroad of a U.S. Citizen
- U.S. Citizen Identification Card
- Final Adoption Decree
- Evidence of U.S. Civil Service Employment before June 1, 1976
- Statement Provided by U.S. Consular Officer Certifying Citizenship
- Religious Records Recorded in the 50 states, D.C., or a U.S. Territory Showing Birth Date or Child's Age and Location of Birth in U.S.
- Early School Records
- Census Records
- Other Documents that Establish a U.S. Place of Birth or in Some Way Indicates U.S. Citizenship

AND

Documents that Serve to Prove Identification:

- A Driver's License or Identification Card Regardless of the State of Issuance
- School Identification Card with Photograph
- Identification Card Issued by Federal, State or Local Government
- A Driver's License Issued by a Canadian Government Authority

Exhibit A

Scope of Work

Traffic Signal Operations and Maintenance Services

Traffic Signals to be operated and maintained:

1. Gregory Street @ Main Street
2. Richman Street @ Main Street
3. Mill Street @ Main Street

1. Work includes all programming and operation of equipment associated with each traffic signal installation including but not limited to:
    a. Intersection controller
    b. Detection equipment
    c. Conflict monitor
    d. Communications equipment
    e. Luminaires/signs

2. On-going signal timing and coordination updates. Work will include coordination with CDOT Traffic signal management when necessary.

3. Quarterly Preventative Maintenance (QPM) actions. The following tasks shall be completed once per calendar quarter:
    a. Check for proper operation of controller/coordination by observing call/active display and front panel.
    b. Check proper operation of conflict monitor by removal of single load switch and ensure flashing operation begins.
    c. Check for proper detector operation on all actuated phases, including pedestrian push buttons.
    d. Check all vehicle and pedestrian heads for proper alignment and secure mounting.
    e. Check all regulatory, illuminated street name and pedestrian push button signs for proper alignment and secure mounting.
    f. Check cabinet fan, air filter, fluorescent lights, door hinges, and base caulking.
    g. Check condition and accessibility of each pull box.
    h. Check condition of each signal pole, including the presence of all hand hole covers and pole top and end caps.

4. Annual Preventative Maintenance (APM) actions. The following tasks are to be performed once per year. These annual preventative maintenance tasks may be performed simultaneously with one of the quarterly inspections.
    a. Voltage and current readings (24V dc, input line AC).
    b. Vacuum cabinet internals
    c. Change door air filter
    d. Perform full diagnostic test of conflict monitor with automated test equipment
    e. Clean each video detection camera lens
    f. Check pole and mast arm for visible damage/cracking.

5. Any maintenance items identified in the quarterly or annual preventive maintenance actions will have a cost estimate for repair provided with the report so that the city can elect to complete the work.

6. Routine signal repairs. Repairs of minor malfunctions will be started within two working days' notice of any deficiency. Routine malfunctions typically would include but not be limited to:
    a. Failed LED signal faces.
    b. Detection equipment in failed "on" state.
    c. Damaged or missing signal lens visors.
    d. Burned out luminaire bulbs/failed photo cells.

7. Emergency response and repairs. Repairs to major malfunctions shall be started within 24 hours' notice of any deficiency. Major malfunctions typically would include but not be limited to:
    a. Signal in flashing operation.
    b. Signal dark with 110 signal faces illuminated, but power line available.
    c. Detection equipment in failed "off" state.
    d. Equipment on signal pole or mast arm in immediate danger of falling.
    e. Signal poles or cabinets that have been damaged beyond use.

8. Construction management of any new signals or signal rebuilds, if said signal is identified in this Exhibit.

9. Routine equipment upgrades such as new versions of controller or detector firmware.

10. Perform locates of underground equipment including traffic signal conduits, power feeds, or communications infrastructure.

In addition – lighted street signs at the following intersections will be maintained:

1. Highway 119 @ Black Hawk Street
2. Highway 119 @ Richman Street
3. Highway 119 @ Mill Street
4. Highway 119 @ Main Street

Highway Light Maintenance and Repair Services

1. Eleven (11) Highway Lights identified as M-A through M-K located along Highway 119 east of Main Street shall be maintained and repaired.

    a. Nine of the lights are double mast arm-median mounted with LED fixtures
    b. Two are single mast arm-shoulder mounted with LED fixtures
    c. All poles have breakaway bases

2. Work includes 24/7 emergency response to address knock downs. Work will consist of:
    a. Securing all wiring, removing the pole and appurtenances from the roadway and hauling it to the City storage area on Miners Mesa.
    b. Ordering replacement parts and reinstalling the pole including wiring and base repairs or replacements.
    c. Securing the necessary permits for work within the CDOT right of way.
    d. Repairs to any of the Highway lights including fixture replacements.

Exhibit A-1

City of Black Hawk
Extra Work Rate Schedule

Vehicle Equipment	Hourly Rate
Bucket Truck	$36.50
Boom/Digger Truck	$78.15
Air Compressor	$15.00
Pickup Truck	$31.30
Maintenance Van	$31.30
Front End Loader	$41.70
Backhoe/Trencher	$67.75

Personnel	
Supervisor	$67.75
Foreman	$57.30
Tech III	$60.00
Tech II	$55.00
Tech I	$50.00
Master Electrician	$67.75
Operator	$50.00
Laborer	$40.00
Engineering	$125.00

Note: IMSA Certifications listed are minimums required for each personnel category. No IMSA certification is required for master electrician, operator, laborer, or traffic engineer.

Unit Costs		
6x40 Loop Detector	In Asphalt	$1,400.00
6x40 Loop Detector	In Concrete	$1,400.00
Annual Lamp Change	Per Lamp	$7.50
Computerized Conflict Monitor Testing	Per Intersection	$275.00
Quarterly Preventative Maintenance	Per Location	$130.00
Annual Preventative Maintenance	Per Location	$235.00
After Hour Emergency Rates	(All Classifications)	$85.00/hr

"After Hours" is defined as all hours between 3:30pm – 7:00am, weekends & holidays.

CERTIFICATE OF LIABILITY INSURANCE

12/1/2021

DATE (MM/DD/YYYY)
12/22/2020

THIS CERTIFICATE IS ISSUED AS A MATTER OF INFORMATION ONLY AND CONFERS NO RIGHTS UPON THE CERTIFICATE HOLDER. THIS CERTIFICATE DOES NOT AFFIRMATIVELY OR NEGATIVELY AMEND, EXTEND OR ALTER THE COVERAGE AFFORDED BY THE POLICIES BELOW. THIS CERTIFICATE OF INSURANCE DOES NOT CONSTITUTE A CONTRACT BETWEEN THE ISSUING INSURER(S), AUTHORIZED REPRESENTATIVE OR PRODUCER, AND THE CERTIFICATE HOLDER.

IMPORTANT: If the certificate holder is an ADDITIONAL INSURED, the policy(ies) must have ADDITIONAL INSURED provisions or be endorsed. If SUBROGATION IS WAIVED, subject to the terms and conditions of the policy, certain policies may require an endorsement. A statement on this certificate does not confer rights to the certificate holder in lieu of such endorsement(s).

PRODUCER Lockton Companies 8110 E Union Avenue Suite 700 Denver CO 80237 (303) 414-6000	CONTACT NAME: PHONE (A/C, No, Ext): FAX (A/C, No): E-MAIL ADDRESS:
INSURED 1486517 W.L. Contractors, Inc. dba Lumin8 Transportation Technologies 5920 N Lamar Street Arvada, CO 80003	INSURER(S) AFFORDING COVERAGE — NAIC # INSURER A : Federal Insurance Company — 20281 INSURER B : Executive Risk Indemnity Inc. — 35181 INSURER C : The Princeton Excess & Surplus Lines Ins Co — 10786 INSURER D : Allied World Assurance Company (U.S.) Inc. — 19489 INSURER E : INSURER F :

COVERAGES **CERTIFICATE NUMBER:** 17241093 **REVISION NUMBER:** XXXXXXX

THIS IS TO CERTIFY THAT THE POLICIES OF INSURANCE LISTED BELOW HAVE BEEN ISSUED TO THE INSURED NAMED ABOVE FOR THE POLICY PERIOD INDICATED. NOTWITHSTANDING ANY REQUIREMENT, TERM OR CONDITION OF ANY CONTRACT OR OTHER DOCUMENT WITH RESPECT TO WHICH THIS CERTIFICATE MAY BE ISSUED OR MAY PERTAIN, THE INSURANCE AFFORDED BY THE POLICIES DESCRIBED HEREIN IS SUBJECT TO ALL THE TERMS, EXCLUSIONS AND CONDITIONS OF SUCH POLICIES. LIMITS SHOWN MAY HAVE BEEN REDUCED BY PAID CLAIMS.

INSR LTR	TYPE OF INSURANCE	ADDL INSD	SUBR WVD	POLICY NUMBER	POLICY EFF (MM/DD/YYYY)	POLICY EXP (MM/DD/YYYY)	LIMITS	
B	COMMERCIAL GENERAL LIABILITY [ ] CLAIMS-MADE [X] OCCUR GEN'L AGGREGATE LIMIT APPLIES PER: [X] POLICY [ ] PRO-JECT [ ] LOC [ ] OTHER:	Y	N	54326176	12/1/2020	12/1/2021	EACH OCCURRENCE DAMAGE TO RENTED PREMISES (Ea occurrence) MED EXP (Any one person) PERSONAL & ADV INJURY GENERAL AGGREGATE PRODUCTS - COMP/OP AGG $	$ 1,000,000 $ 100,000 $ 5,000 $ 1,000,000 $ 2,000,000 $ 2,000,000 $
A	AUTOMOBILE LIABILITY [X] ANY AUTO [ ] OWNED AUTOS ONLY [ ] SCHEDULED AUTOS [ ] HIRED AUTOS ONLY [ ] NON-OWNED AUTOS ONLY	N	N	54326175	12/1/2020	12/1/2021	COMBINED SINGLE LIMIT (Ea accident) BODILY INJURY (Per person) BODILY INJURY (Per accident) PROPERTY DAMAGE (Per accident) $	$ 1,000,000 $ XXXXXXX $ XXXXXXX $ XXXXXXX $ XXXXXXX
C D	[X] UMBRELLA LIAB [X] OCCUR [X] EXCESS LIAB [ ] CLAIMS-MADE [ ] DED [ ] RETENTION $	N	N	8E-A3-XL-0000160-00 0312-6203	12/1/2020 12/1/2020	12/1/2021 12/1/2021	EACH OCCURRENCE AGGREGATE $	$ 6,000,000 $ 6,000,000 $ XXXXXXX
A	WORKERS COMPENSATION AND EMPLOYERS' LIABILITY ANY PROPRIETOR/PARTNER/EXECUTIVE OFFICER/MEMBER EXCLUDED? Y/N [N] (Mandatory in NH) If yes, describe under DESCRIPTION OF OPERATIONS below	N/A	N	54326177	12/1/2020	12/1/2021	[X] PER STATUTE [ ] OTH-ER E.L. EACH ACCIDENT E.L. DISEASE - EA EMPLOYEE E.L. DISEASE - POLICY LIMIT	 $ 1,000,000 $ 1,000,000 $ 1,000,000

DESCRIPTION OF OPERATIONS / LOCATIONS / VEHICLES (ACORD 101, Additional Remarks Schedule, may be attached if more space is required)
City of Black Hawk is included as Additional Insured as respects General Liability if required by written contract. General Liability is Primary and Non-Contributory.

CERTIFICATE HOLDER

17241093
City of Black Hawk
Attn: City Clerk
P.O. Box 68
Black Hawk, CO 80422

CANCELLATION

SHOULD ANY OF THE ABOVE DESCRIBED POLICIES BE CANCELLED BEFORE THE EXPIRATION DATE THEREOF, NOTICE WILL BE DELIVERED IN ACCORDANCE WITH THE POLICY PROVISIONS.

AUTHORIZED REPRESENTATIVE

© 1988-2015 ACORD CORPORATION. All rights reserved.

THIRD ADDENDUM TO SERVICES AGREEMENT

THIS THIRD ADDENDUM TO SERVICES AGREEMENT (the "Third Addendum") is made and entered into this _____ day of _____ 2021, by and between the **City of Black Hawk**, Colorado (hereinafter referred to as the "City") and **Sun Valley Electric** (hereinafter referred to as "Contractor").

RECITALS:

A. On September 12, 2018 the City and Contractor entered into a Services Agreement (the "Agreement").

B. On December 8, 2018 the City and Contractor entered into the First Addendum to Service Agreement (the "First Addendum").

C. On January 22, 2020 the City and Contractor entered into the Second Addendum to Service Agreement (the "Second Addendum").

D. The parties desire to further extend the Agreement with this Third Addendum for one additional year.

AGREEMENT

NOW, THEREFORE, it is hereby agreed that for the consideration hereinafter set forth, that Contractor shall provide to the City, the additional work as needed in the manner provided in this Third Addendum.

1. The contract term for the Agreement is hereby extended by this Third Addendum for one additional year, from January 1, 2021, through and including December 31, 2021.

2. Contractor shall perform all work as set forth in the Agreement in accordance with Contractor's rate schedule attached hereto as **Exhibit A**, and incorporated by this reference.

3. The original Agreement is in full force and effect and is hereby ratified by the City and the Contractor. The original Agreement, the First Addendum, the Second Addendum, and this Third Addendum constitute all of the agreements between the City and the Contractor.

IN WITNESS WHEREOF, the parties hereto each herewith subscribe the same in duplicate.

CITY OF BLACK HAWK, COLORADO

By: _____
David D. Spellman, Mayor

ATTEST:

_____
Melissa A. Greiner, City Clerk
City Clerk

APPROVED AS TO FORM:

_____
Corey Y. Hoffmann
City Attorney

SUN VALLEY ELECTRIC

By: _____
Matt Weber
Print Name

Vice President 12/23/20
Title Date

ATTEST:

By: _____
Brandon Prokop
Print Name

Controller 12/23/20
Title Date

LIC # 1900
SUN ELECTRIC VALLEY

INDUSTRIAL T&M RATE SHEET

2021

RESOURCE	RATE	OVERTIME/EMERGENCY
Foreman Electrician	*$90.00/Hr.*	*$130.50/Hr.*
Apprentice Electrician	*$65.00/Hr.*	*$97.50/Hr.*
Project Management/ Supervisory Time	*$85.00/Hr.*	*127.50/Hr.*
Design/Estimation	*$105.00/hr*	*$105.00*

Aerial/Excavation equipment is not included in standard rates, and will be billed at rental rate plus 10%

Materials/ consumables purchased by SVE will be billed at cost plus 10%

ACORD®

CERTIFICATE OF LIABILITY INSURANCE

DATE (MM/DD/YYYY): 02/11/2020

THIS CERTIFICATE IS ISSUED AS A MATTER OF INFORMATION ONLY AND CONFERS NO RIGHTS UPON THE CERTIFICATE HOLDER. THIS CERTIFICATE DOES NOT AFFIRMATIVELY OR NEGATIVELY AMEND, EXTEND OR ALTER THE COVERAGE AFFORDED BY THE POLICIES BELOW. THIS CERTIFICATE OF INSURANCE DOES NOT CONSTITUTE A CONTRACT BETWEEN THE ISSUING INSURER(S), AUTHORIZED REPRESENTATIVE OR PRODUCER, AND THE CERTIFICATE HOLDER.

IMPORTANT: If the certificate holder is an ADDITIONAL INSURED, the policy(ies) must have ADDITIONAL INSURED provisions or be endorsed. If SUBROGATION IS WAIVED, subject to the terms and conditions of the policy, certain policies may require an endorsement. A statement on this certificate does not confer rights to the certificate holder in lieu of such endorsement(s).

PRODUCER FEDERATED MUTUAL INSURANCE COMPANY HOME OFFICE: P.O. BOX 328 OWATONNA, MN 55060	CONTACT NAME: CLIENT CONTACT CENTER PHONE (A/C, No, Ext): 888-333-4949 FAX (A/C, No): 507-446-4664 E-MAIL ADDRESS: CLIENTCONTACTCENTER@FEDINS.COM
INSURED 357-194-0 SUN VALLEY ELECTRIC INC 5475 HIGHWAY 86 UNIT 2 AND 3 ELIZABETH, CO 80107-7451	INSURER(S) AFFORDING COVERAGE / NAIC # INSURER A: FEDERATED MUTUAL INSURANCE COMPANY 13935 INSURER B: INSURER C: INSURER D: INSURER E: INSURER F:

COVERAGES **CERTIFICATE NUMBER: 135** **REVISION NUMBER: 0**

THIS IS TO CERTIFY THAT THE POLICIES OF INSURANCE LISTED BELOW HAVE BEEN ISSUED TO THE INSURED NAMED ABOVE FOR THE POLICY PERIOD INDICATED. NOTWITHSTANDING ANY REQUIREMENT, TERM OR CONDITION OF ANY CONTRACT OR OTHER DOCUMENT WITH RESPECT TO WHICH THIS CERTIFICATE MAY BE ISSUED OR MAY PERTAIN, THE INSURANCE AFFORDED BY THE POLICIES DESCRIBED HEREIN IS SUBJECT TO ALL THE TERMS, EXCLUSIONS AND CONDITIONS OF SUCH POLICIES. LIMITS SHOWN MAY HAVE BEEN REDUCED BY PAID CLAIMS.

INSR LTR	TYPE OF INSURANCE	ADDL INSR	SUBR WVD	POLICY NUMBER	POLICY EFF (MM/DD/YYYY)	POLICY EXP (MM/DD/YYYY)	LIMITS	
A	X COMMERCIAL GENERAL LIABILITY CLAIMS-MADE / X OCCUR GEN'L AGGREGATE LIMIT APPLIES PER: X POLICY / PRO-JECT / LOC OTHER:	Y	Y	9065923	04/01/2020	04/01/2021	EACH OCCURRENCE DAMAGE TO RENTED PREMISES (Ea occurrence) MED EXP (Any one person) PERSONAL & ADV INJURY GENERAL AGGREGATE PRODUCTS - COMP/OP AGG	$1,000,000 $100,000 EXCLUDED $1,000,000 $2,000,000 $2,000,000
A	AUTOMOBILE LIABILITY X ANY AUTO OWNED AUTOS ONLY / SCHEDULED AUTOS HIRED AUTOS ONLY / NON-OWNED AUTOS ONLY	Y	Y	9065923	04/01/2020	04/01/2021	COMBINED SINGLE LIMIT (Ea accident) BODILY INJURY (Per person) BODILY INJURY (Per accident) PROPERTY DAMAGE (Per accident)	$1,000,000
A	X UMBRELLA LIAB / X OCCUR EXCESS LIAB / CLAIMS-MADE DED / RETENTION	N	N	9065926	04/01/2020	04/01/2021	EACH OCCURRENCE AGGREGATE	$5,000,000 $5,000,000
A	WORKERS COMPENSATION AND EMPLOYERS' LIABILITY ANY PROPRIETOR/PARTNER/EXECUTIVE OFFICER/MEMBER EXCLUDED? (Mandatory in NH) Y / N If yes, describe under DESCRIPTION OF OPERATIONS below	N / A	N	9816300	04/01/2020	04/01/2021	X PER STATUTE / OTH-ER E.L. EACH ACCIDENT E.L. DISEASE - EA EMPLOYEE E.L DISEASE - POLICY LIMIT	 $1,000,000 $1,000,000 $1,000,000

DESCRIPTION OF OPERATIONS / LOCATIONS / VEHICLES (ACORD 101, Additional Remarks Schedule, may be attached if more space is required)

SEE ATTACHED PAGE

CERTIFICATE HOLDER

357-194-0 135 0
CITY OF BLACKHAWK
987 MINERS MESA ROAD
BLACKHAWK, CO 80422

CANCELLATION

SHOULD ANY OF THE ABOVE DESCRIBED POLICIES BE CANCELLED BEFORE THE EXPIRATION DATE THEREOF, NOTICE WILL BE DELIVERED IN ACCORDANCE WITH THE POLICY PROVISIONS.

AUTHORIZED REPRESENTATIVE

Michael G Kern

© 1988-2015 ACORD CORPORATION. All rights reserved.

AGENCY CUSTOMER ID: 357-194-0
LOC #:

ADDITIONAL REMARKS SCHEDULE

AGENCY	NAMED INSURED
FEDERATED MUTUAL INSURANCE COMPANY	SUN VALLEY ELECTRIC INC 5475 HIGHWAY 86 UNIT 2 AND 3 ELIZABETH, CO 80107-7451
POLICY NUMBER SEE CERTIFICATE # 135.0	
CARRIER: SEE CERTIFICATE # 135.0 — NAIC CODE	EFFECTIVE DATE: SEE CERTIFICATE # 135.0

ADDITIONAL REMARKS

THIS ADDITIONAL REMARKS FORM IS A SCHEDULE TO ACORD FORM,

FORM NUMBER: 25 **FORM TITLE:** CERTIFICATE OF LIABILITY INSURANCE

PROJECT: CITY OF BLACKHAWK
INSURANCE PROVIDED BY THE GENERAL LIABILITY COVERAGE IS PRIMARY AND NONCONTRIBUTORY OVER OTHER INSURANCE.
THE CERTIFICATE HOLDER IS AN ADDITIONAL INSURED SUBJECT TO THE CONDITIONS OF THE ADDITIONAL INSURED - OWNERS, LESSEES OR CONTRACTORS - AUTOMATIC STATUS WHEN REQUIRED IN CONSTRUCTION AGREEMENT WITH YOU ENDORSEMENT FOR GENERAL LIABILITY.
GENERAL LIABILITY CONTAINS A WAIVER OF SUBROGATION IN FAVOR OF THE CERTIFICATE HOLDER SUBJECT TO THE CONDITIONS OF THE BLANKET WAIVER OF TRANSFER OF RIGHTS OF RECOVERY ENDORSEMENT.
THE CERTIFICATE HOLDER IS AN ADDITIONAL INSURED SUBJECT TO THE CONDITIONS OF THE ADDITIONAL INSURED BY CONTRACT ENDORSEMENT FOR BUSINESS AUTO LIABILITY.
BUSINESS AUTO LIABILITY CONTAINS A WAIVER OF SUBROGATION IN FAVOR OF THE CERTIFICATE HOLDER SUBJECT TO THE CONDITIONS OF THE BLANKET WAIVER OF TRANSFER OF RIGHTS OF RECOVERY ENDORSEMENT.
INSURANCE PROVIDED BY THE BUSINESS AUTO LIABILITY IS PRIMARY AND NONCONTRIBUTORY OVER OTHER INSURANCE.

© 2008 ACORD CORPORATION. All rights reserved.

The ACORD name and logo are registered marks of ACORD

SECOND ADDENDUM TO THE AGREEMENT FOR PROFESSIONAL SERVICES

THIS SECOND ADDENDUM TO THE AGREEMENT FOR PROFESSIONAL SERVICES ("Second Addendum") is made and entered into this _____ day of _____ 20____, by and between the City of Black Hawk, Colorado (hereinafter referred to as the "City") and PEH Architects (hereinafter referred to as the "Contractor").

RECITALS

A. On December 12, 2018 the City and Contractor entered into an Agreement for Professional Services (the "Agreement").

B. On January 22, 2020 the City and Contractor executed a First Addendum to extend the Agreement by one year (the "First Addendum").

C. The parties desire to extend the Agreement with this Second Addendum for one additional year.

AGREEMENT

NOW, THEREFORE, it is hereby agreed that for the consideration hereinafter set forth, that Contractor shall provide to the City the additional work as needed in the manner provided in this Second Addendum.

A. The contract term for the Agreement is hereby extended by this Second Addendum for one additional year, from January 1, 2021 through December 31, 2021.

B. Contractor shall complete the scope of services as described in **Exhibit A**, attached hereto and incorporated herein by this reference. Compensation shall not exceed Thirty thousand dollars ($30,000) for the work described in **Exhibit A**.

C. Contractor shall perform all work as set forth in the Agreement in accordance with Contractor's rate schedule as described in **Exhibit B**, attached hereto and incorporated herein by this reference.

D. The original Agreement is in full force and effect and is hereby ratified by the City and the Contractor.

IN WITNESS WHEREOF, the parties hereto each herewith subscribe the same in duplicate.

CITY OF BLACK HAWK, COLORADO

By: _____
David D. Spellman, Mayor

ATTEST:

_____
Melissa A. Greiner, City Clerk

APPROVED AS TO FORM:

_____
Corey Y. Hoffmann, City Attorney

PEH ARCHITECTS

By: Peter E. Heinz

Its: PRESIDENT

STATE OF COLORADO)
) ss.
COUNTY OF BOULDER)

The foregoing instrument was subscribed, sworn to, and acknowledged before me this 15 day of DECEMBER, 2020, by PETER E. HEINZ as the PRESIDENT of PEH ARCHITECTS.

My commission expires: JULY 1, 2023

(S E A L)

MARI E BLASER
Notary Public
State of Colorado
Notary ID # 20194024644
My Commission Expires 07-01-2023

Mari E Blaser
Notary Public

EXHIBIT A

SCOPE OF SERVICES

2021 On-Call Architectural Services

Services and responsibilities may include, but not necessarily be limited to, the following:

Development review. Contractor may review and comment on proposed development plans and reports that are received by the City. Contractor shall ensure proposed developments conform to applicable architectural standards and specifications.

General architectural design. The City may request the Contractor to complete various architectural designs and prepare architectural plans and specifications.

Opinions of probable construction costs. Contractor may prepare and/or review construction cost estimates pertaining to architectural work.

Meeting attendance. The City may request the Contractor to provide competent architectural personnel at one-time or regular meetings during design and/or construction phases of projects.

Contractor shall retain qualified personnel, including Architects registered in the State of Colorado, to perform the above Scope of Services.

PEH ARCHITECTS

1720 14th Street Suite 100
Boulder, Colorado 80302
303-442-0408
peheinz@peharch.com

January 1, 2021

EXHIBIT B

HOURLY BILLING RATES

The following hourly billing rates shall be established for services as described below:

- Professional services billable on an hourly basis.
- Additional services as defined in the Owner - Architect Agreement for Services.

Principal:	$185.00
Project Architect:	$160.00
Project Manager:	125.00
CAD draftsperson:	85.00

Reimbursable expenses, billed at market rate plus 10%, shall include photography, blueprinting, photocopying, delivery, postage, FAX, CADD plotting and client authorized travel.

PEHARCH-01 CMORGAN

CERTIFICATE OF LIABILITY INSURANCE

DATE (MM/DD/YYYY) 1/4/2021

THIS CERTIFICATE IS ISSUED AS A MATTER OF INFORMATION ONLY AND CONFERS NO RIGHTS UPON THE CERTIFICATE HOLDER. THIS CERTIFICATE DOES NOT AFFIRMATIVELY OR NEGATIVELY AMEND, EXTEND OR ALTER THE COVERAGE AFFORDED BY THE POLICIES BELOW. THIS CERTIFICATE OF INSURANCE DOES NOT CONSTITUTE A CONTRACT BETWEEN THE ISSUING INSURER(S), AUTHORIZED REPRESENTATIVE OR PRODUCER, AND THE CERTIFICATE HOLDER.

IMPORTANT: If the certificate holder is an ADDITIONAL INSURED, the policy(ies) must have ADDITIONAL INSURED provisions or be endorsed. If SUBROGATION IS WAIVED, subject to the terms and conditions of the policy, certain policies may require an endorsement. A statement on this certificate does not confer rights to the certificate holder in lieu of such endorsement(s).

PRODUCER Taggart & Associates, Inc. 1680 38th Street Suite 110 Boulder, CO 80301	CONTACT NAME: Jeremy Long PHONE (A/C, No, Ext): (303) 442-1484 FAX (A/C, No): E-MAIL ADDRESS: jlong@taggartinsurance.com	
	INSURER(S) AFFORDING COVERAGE	NAIC #
	INSURER A : The Travelers Indemnity Company of America	25666
INSURED PEH Architects, Inc. 1319 Spruce Street, Suite 207 Boulder, CO 80302	INSURER B : The Travelers Indemnity Company of Connecticut	25682
	INSURER C :	
	INSURER D :	
	INSURER E :	
	INSURER F :	

COVERAGES **CERTIFICATE NUMBER:** **REVISION NUMBER:**

THIS IS TO CERTIFY THAT THE POLICIES OF INSURANCE LISTED BELOW HAVE BEEN ISSUED TO THE INSURED NAMED ABOVE FOR THE POLICY PERIOD INDICATED. NOTWITHSTANDING ANY REQUIREMENT, TERM OR CONDITION OF ANY CONTRACT OR OTHER DOCUMENT WITH RESPECT TO WHICH THIS CERTIFICATE MAY BE ISSUED OR MAY PERTAIN, THE INSURANCE AFFORDED BY THE POLICIES DESCRIBED HEREIN IS SUBJECT TO ALL THE TERMS, EXCLUSIONS AND CONDITIONS OF SUCH POLICIES. LIMITS SHOWN MAY HAVE BEEN REDUCED BY PAID CLAIMS.

INSR LTR	TYPE OF INSURANCE	ADDL INSD	SUBR WVD	POLICY NUMBER	POLICY EFF (MM/DD/YYYY)	POLICY EXP (MM/DD/YYYY)	LIMITS	
A	X COMMERCIAL GENERAL LIABILITY						EACH OCCURRENCE	$ 1,000,000
	CLAIMS-MADE X OCCUR	X		6805H707450	12/31/2020	12/31/2021	DAMAGE TO RENTED PREMISES (Ea occurrence)	$ 1,000,000
							MED EXP (Any one person)	$ 5,000
							PERSONAL & ADV INJURY	$ 1,000,000
	GEN'L AGGREGATE LIMIT APPLIES PER:						GENERAL AGGREGATE	$ 2,000,000
	X POLICY PRO-JECT LOC						PRODUCTS - COMP/OP AGG	$ 2,000,000
	OTHER:							$
	AUTOMOBILE LIABILITY						COMBINED SINGLE LIMIT (Ea accident)	$ 1,000,000
	X ANY AUTO			BA5C605406	12/31/2020	12/31/2021	BODILY INJURY (Per person)	$
	OWNED AUTOS ONLY / SCHEDULED AUTOS						BODILY INJURY (Per accident)	$
	HIRED AUTOS ONLY / NON-OWNED AUTOS ONLY						PROPERTY DAMAGE (Per accident)	$
								$
	UMBRELLA LIAB OCCUR						EACH OCCURRENCE	$
	EXCESS LIAB CLAIMS-MADE						AGGREGATE	$
	DED RETENTION $							$
	WORKERS COMPENSATION AND EMPLOYERS' LIABILITY Y / N						PER STATUTE OTH-ER	
	ANY PROPRIETOR/PARTNER/EXECUTIVE OFFICER/MEMBER EXCLUDED? (Mandatory in NH) N / A						E.L. EACH ACCIDENT	$
	If yes, describe under DESCRIPTION OF OPERATIONS below						E.L. DISEASE - EA EMPLOYEE	$
							E.L. DISEASE - POLICY LIMIT	$

DESCRIPTION OF OPERATIONS / LOCATIONS / VEHICLES (ACORD 101, Additional Remarks Schedule, may be attached if more space is required)
City of Blackhawk and and their officers, employees and consultants are include as additional insureds to the general liability if required per written contract.;

CERTIFICATE HOLDER

City of Black Hawk
PO Box 68
Black Hawk, CO 80402

CANCELLATION

SHOULD ANY OF THE ABOVE DESCRIBED POLICIES BE CANCELLED BEFORE THE EXPIRATION DATE THEREOF, NOTICE WILL BE DELIVERED IN ACCORDANCE WITH THE POLICY PROVISIONS.

AUTHORIZED REPRESENTATIVE

© 1988-2015 ACORD CORPORATION. All rights reserved.
The ACORD name and logo are registered marks of ACORD

RESOLUTION 6-2021

A RESOLUTION APPROVING THE REORGANIZATION OF THE POLICE DEPARTMENT RECORDS DIVISION AND APPROVING THE ASSOCIATED JOB DESCRIPTIONS

STATE OF COLORADO
COUNTY OF GILPIN
CITY OF BLACK HAWK

Resolution No. 6-2021

TITLE: A RESOLUTION APPROVING THE REORGANIZATION OF THE POLICE DEPARTMENT RECORDS DIVISION AND APPROVING THE ASSOCIATED JOB DESCRIPTIONS

NOW, THEREFORE, BE IT RESOLVED BY THE CITY COUNCIL OF THE CITY OF BLACK HAWK, COLORADO, THAT:

Section 1. The City Council hereby approves the restructuring of the Police Department Records Division as more particularly described in **Exhibit A** to this Resolution, attached hereto and incorporated herein by this reference.

Section 2. The City Council hereby approves the associated job descriptions for the Police Records Supervisor and Police Records Specialist/Municipal Court Clerk as more particularly described in **Exhibit B** to this Resolution, attached hereto and incorporated herein by this reference.

RESOLVED AND PASSED this 13th day of January, 2021.

_____
David D. Spellman, Mayor

ATTEST:

_____
Melissa Greiner, CMC, City Clerk

EXHIBIT A

CITY OF BLACK HAWK
REQUEST FOR COUNCIL ACTION

SUBJECT: Reorganization of the Police Department Records Division and request for approval of the proposed changes to the Police Records Supervisor and the Police Records Specialist/Municipal Court Clerk job description.

RECOMMENDATION: Staff recommends the following motion to the Mayor and Board of Aldermen:

MOTION TO APPROVE Resolution 6-2021, A Resolution Approving the Reorganization of the Police Department Records Division and Approving the Associated Job Descriptions

SUMMARY AND BACKGROUND OF SUBJECT MATTER:

The City Manager has worked with Management Team over the past two years to review each department's structure and organization to establish the most effective and efficient use of staff. All departments have been reviewed and/or reorganized except for the Police Department Records Division. While a new Police Recruit position was approved in 2020, it was decided to wait for a new Police Chief and let the Chief determine if the department's operations needed further adjustments. Chief Michelle Moriarty was hired on October 5, 2020, and after a time of observation, is recommending the reorganization of the Police Records Division, moving the Property Evidence Technician position from reporting directly to the Administrative Commander to reporting to the Police Records Supervisor. The reorganization will free the Commander's time and provide for more efficient operations. The Police Records Supervisor will have two direct reports with the reorganization.

Current Police Department Organizational Structure

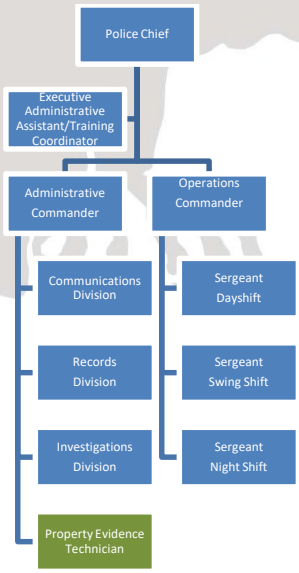

EXHIBIT A

Proposed Police Department Organizational Structure

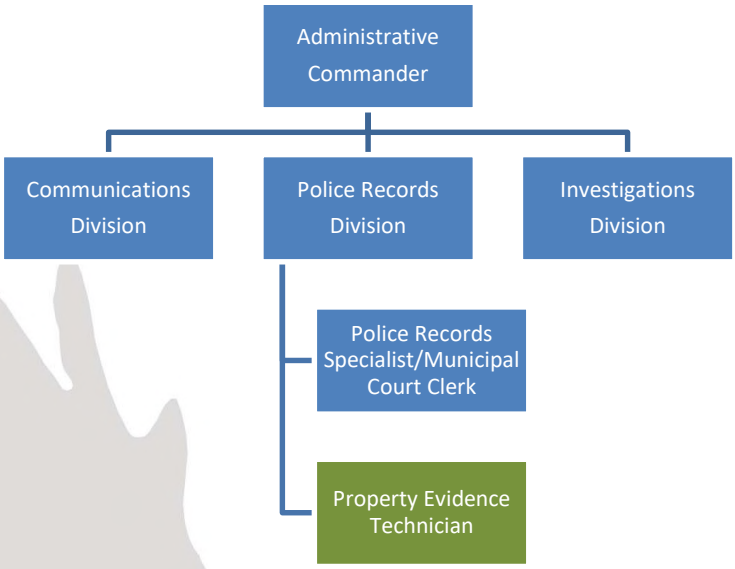

As with the prior department reviews, the job description reviews for the Records Division were conducted to ensure the job duties and responsibilities and starting salaries are what the City needs for each position and are in line with the current market. Revisions were made to the Police Records Supervisor and Police Records Specialist/Municipal Court Clerk's position to reflect the reorganization's needs. The starting salary has been adjusted for the Police Records Specialist/Municipal Court Clerk's position to align with market comparables with similar job duties and responsibilities. Red-lined versions of the proposed changes to the job descriptions are attached for Council's review. No substantive changes were required for the Property Evidence Technician job description, or the starting salaries Records Supervisor or the Property Evidence Technician.

The reorganization of the Police Records Division is the final piece of the review of all departments.

AGENDA DATE:	January 13, 2021
WORKSHOP DATE:	November 11, 2020
FUNDING SOURCE:	Personnel Line Item – Police Department
STAFF PERSON RESPONSIBLE:	Melissa Greiner, CMC City Clerk/Administrative Services Director
DOCUMENTS ATTACHED:	Police Records Specialist/Municipal Court Clerk Job Descriptions
RECORD:	[ ]Yes [X]No

EXHIBIT A

CITY ATTORNEY REVIEW: [X]Yes [ ]N/A

SUBMITTED BY:

Melissa A. Greiner, CMC
City Clerk/Administrative Services Director

REVIEWED BY:

Stephen N. Cole
City Manager

EXHIBIT B

CITY OF BLACK HAWK
2020~~0~~1 Job Description

JOB TITLE: Police Records Supervisor **DEPARTMENT: Police Department**

REPORTS TO: Administration Commander **EXEMPT: No**

SALARY RANGE: $31.0688 - $40.3889 / HR

SUMMARY

The Records Supervisor is a non-sworn classification responsible for the first-line supervision, coordination and direction of the Records Section. To plan, organize, supervise, coordinate, participate and direct the activities of the records section of the Police Department. Assist with the preparation of the annual budget. This position reports to the Administrative ~~Lieutenant~~ Commander and exercises independent judgment and initiative to ensure the efficient and effective operation of the records system. Provides direct supervision of the Records/Municipal Court Clerk and the Property Evidence Technician. Can provide supervision of the ~~and~~ Communications Officers when directed by the Administrative Commander.

ESSENTIAL DUTIES AND RESPONSIBILITIES

- Plan, organize, assign and supervise the work of the Records Section in the performance of records management and retention functions.
- Develop, implement and modify clerical and informational systems and procedures to improve operations and ensure compliance with new and existing laws.
- Apply laws, court decisions, rules and regulations regarding use and confidentiality of police records and implement training and procedures to ensure compliance; approve release or inspection of police reports. Controls the handling of the special records such as sealed records, sex offender files, and etc.
- Assist in the preparation of the annual Police Department budget.
- Supervise the records personnel in the processing and maintenance of police reports and records such as criminal, arrest and accident reports.
- Work with other department personnel and the public in the use of the police records system.
- Supervise, train, and evaluate the work of the employees of the records section and overlook the assistance from communications.
- Develop, maintain, and update training program for Records/Municipal Court Employees.
- Maintains employee management logs and progress reports; completes annual evaluations.
- Supervise the records functions of scanning documents and NIBRS entries.
- Keeps the policies and procedures of the records department current and accurate.
- ~~Is responsible and accountable for monies received monthly and the petty cash.~~

- Prepares statistical reports and annual departmental reports as requested. Is responsible for making sure all data input in the computer is accurate for the monthly reporting of the National Incident Based Reporting System (NIBRS).
- ~~Schedules all training classes for officers and arranges for hotel and travel reservations.~~

QUALIFICATIONS

Knowledge of:

- Must have knowledge of the operation of the police records management system.
- Principles, codes, regulations and laws governing records management.
- Software programs such as Microsoft Word, Excel, and Outlook.
- Principles of office management, supervision, training and evaluation.
- Criminal justice procedures.
- National Incident Based Reporting System and Uniform Crime Reporting standards.
- Modern office procedures, techniques and equipment including principles of record-keeping and automated information systems.
- Research techniques and procedures, update according to current trends.
- Organization, procedures and operating details of the Police Department.

Ability to:

- Understand the organization and operation of the city and of outside agencies as necessary to assume assigned responsibilities.
- Plan and organize the work of a police records and clerical support operation.
- Read and interpret laws, rules and regulations relating to law enforcement records.
- Operate a computer terminal.
- Communicate effectively, orally and in writing.
- Mitigate interpersonal conflicts that may arise with subordinates and co-workers~~within the records department~~.
- Work cooperatively with other departments, outside agencies and the public.
- Supervise, train and evaluate subordinates.

Certifications:

- Valid Colorado driver's license with safe driving record.
- Must have a current CCRT (Colorado Certified Records Technician) Master certification.

EXPERIENCE AND EDUCATION

Any combination of experience and education that would likely provide the required knowledge and abilities is qualifying. A typical way to obtain the knowledge and abilities would be:

Experience:

Three years of technical experience in police records work.

Education:

High school diploma or GED.

PHYSICAL DEMANDS

Perform the essential job functions physically. Maintain physical condition and fitness to meet the demands as follows:

- Sit for extended periods of time, positions oneself in front of various computer workstations, ability to function for extended periods of time.
- Carryout light physical work to include handling objects up to 25 pounds occasionally and/or up to 10 pounds frequently.
- Reach overhead and bend down to retrieve items and documents from various locations.
- Hear within an acceptable range to carryout conversations and understand relevant facts of an urgent nature over the radio, telephone and in person.
- Reach, stoop, hear, see, bend and touch within levels that the essential job functions can be accomplished.

NECESSARY REQUIREMENTS

- Must pass a thorough background investigation, including but not limited to, a polygraph examination, psychological assessment and statement from a Credit Reporting Bureau. Applicants with a record of conviction for serious misdemeanors or felony crimes will be disqualified.
- Must be able to perform in a busy environment with frequent interruptions
- Employees are expected to follow all types of safety rules and use the department provided safety equipment, to include but not limited to seat belts, safety glasses, body armor, ear protection, etc.

COMMENTS

The intent of this classification is to describe the types of job tasks and levels of responsibility and difficulty required of persons assigned to this classification title. This is not to be considered a detailed description of every duty/responsibility of the job.

The City of Black Hawk is an Equal Opportunity Employer. Pursuant to the *Immigrations Reform and Control Act,* it is the City's intention to hire only individuals who are United States citizens or aliens authorized to work and live in the United States.

EXHIBIT B

CITY OF BLACK HAWK
~~2020~~ 2021 Job Description

JOB TITLE: Police Records Specialist/ Municipal Court Clerk **DEPARTMENT: Police Department**

REPORTS TO: Records Supervisor **EXEMPT: No**

SALARY RANGE: $21.625 - $28.1125 / HR
HIRING SALARY: $21.625 - $24.8688 / HR

SUMMARY

The Police Records Court Specialist is a non-sworn classification responsible for filing, processing, and distributing criminal, non-criminal and accident reports generated by the police to the proper agencies accurately and in a timely manner. Performs specialized clerical work related to criminal justice activities, which includes receiving, filing, scanning, fingerprinting, and maintaining and releasing records. Work involves heavy phone usage, computer work, and front counter assistance to officers, the public, and other City staff. Provide customer service in a professional manner on the telephone or in person. Complete general office duties, such as answering phones, directing calls to the appropriate person, and assisting customers when requesting reports, etc. Organize and participate in the functions of the records division for the police department such as maintaining the integrity of the police reports. Serve as clerical aide/secretary to the Municipal Court Judge and the City Attorney, by setting up the courtroom, attending to the defendants regarding court payments, stays of execution, records, setting all cases including arraignments, trials and hearings.

Court Clerk (Under the Direction of a Supervisor or Municipal Court Judge)

- Balances work load fifty percent of the work week on Court Functions.
- Performs courtroom duties that include setting up the courtroom, opening and closing the courtroom, having defendants read and sign written advisements, collecting payments and preparing receipts for payments, stays of execution, notices of court dates and orders to show cause notices.
- Processes documents filed with the Court in accordance with legal requirements. This may include but not limited to: accepting new cases: issuing, canceling and dismissing warrants; reporting dispositions to the Department of Motor Vehicles and other agencies. Prepares subpoenas as requested, summons of jurors, and court files: posting filings, pleadings and orders manually and by computer data entry. Retrieves criminal histories in regard to deferred judgments and for court appearances of defendants.
- Prepares and follows appeal procedures to district court and changes of venue to other courts.

EXHIBIT B

- Issues writs, accepts and receipts payments for filings, fines, bail and other monies. Makes disbursements as ordered by the Judge. Balance and prepare report for bank deposit.
- Set cases for court appearances.
- Ensures compliance with all directives pertaining to the Municipal Courts including preparing monthly reports and disposition of cases.
- Maintains files and records in compliance with records retention and legal standards.
- Researches, evaluates and makes recommendations on specialized Court software.
- Exercises responsibility for all incoming and outgoing correspondence of the Municipal Court.
- Develops various statistical and special information requests.
- Requests interpreters as needed.
- Queries Colorado Crime Information Center (CBI), performs data exchange with the Department of Motor Vehicles, facilitates with coordination of prisoner transports, provides releasable information to parties, enters real time disposition and sentencing information and performs other duties as assigned.
- Manages all municipal Court Warrants to include entering and cancelling in the CICC database.

Records Specialist

- Balances work load fifty percent of the work week on Court Functions.
- Receive, duplicate, distribute and maintain offense incident, accident and supplemental reports generated by the police.
- Process offense reports, summonses and distributes paperwork to the appropriate agencies (such as Department of Revenue, Motor Vehicle, County and Municipal Courts, and District Attorney's Office) in a timely and accurate manner.
- Files and scans documents in police reports
- Completes records requests and releases the criminal justice documents in accordance with State laws ~~and scanning of police records~~.
- Provides felony case filings to the District Attorney's Office following the proper discovery protocols.
- Enter case dispositions.
- Process summonses to the court.
- Process reports to other City Departments when necessary.
- Issuing City parking permits. ~~for storage on CD's.~~
- ~~Fingerprint customers for key licenses and liquor licenses. Process all paperwork involved.~~

ESSENTIAL DUTIES AND RESPONSIBILITIES

- Research requests for information received in person, by telephone and by mail from Police personnel, other Criminal Justice Agencies, City Departments, Insurance Companies, the public and attorneys.
- Prepares and types a variety of documents including forms and routine correspondence.
- Process checks and/or cash from customers for fingerprinting, restitution and tape copies.
- Performs general office support for the records department. Assist co-workers and participate in cross-training programs.
- Review procedures, department manuals and other resources to maintain job knowledge and specific familiarity with every police division.
- Answers the telephone to provide routine information, conveys messages, gives information and refers calls to appropriate personnel/department.

QUALIFICATIONS

To perform this job successfully, an individual must be able to perform each essential duty satisfactorily. The requirements listed below are representative of the knowledge, skill, and/or ability required. Reasonable accommodations may be made to enable individuals with disabilities to perform job functions.

Knowledge of:

- Modern office procedures, techniques and equipment.
- Customer service skills needed for handling difficult or irate persons.
- Principles of criminal justice procedures.
- Quality of fingerprints to be sent to the Colorado Bureau of Investigation.
- Court procedures and policies, legal documents, laws and legal factors relating to their area of responsibility.

Ability to:

- Assist co-workers and participate in cross-training programs.
- Follow precise directions, given by supervisors and work under minimal supervision.
- Ability to perform work with accuracy and attention to detail.
- Ability to work independently in the absence of supervision.
- Operate a computer terminal and other office equipment, such as copiers, facsimile machines. Also have the ability to fix the equipment or the knowledge to call for repair or support.
- Understand the work of police records and clerical support operations.
- Work in a team environment, maintain confidentiality and exercise sound judgment in prioritizing work.
- Communicate effectively and in a professional manner with unpleasant, irate individuals in person or on the telephone.
- Identifies problems within records and exercises sound judgment consistent with department policies in resolving those problems by collecting data, establishing facts and drawing valid conclusions.

- Discern differences between original and duplicate documents.
- Effectively present, both in verbal and written form, information to the Records Supervisor, city employees, and the public and outside agencies.

Certifications:

- Valid Colorado driver's license with a safe driving record.
- CCRT (Colorado Certified Records Technician), must be obtained within one year of service.
- CCRT Certification must be obtained within one year of service.

EXPERIENCE AND EDUCATION

Experience:

One year of general office experience with some knowledge of court procedures.

Education:

High School Diploma or equivalent to completion (G.E.D.).

PHYSICAL DEMANDS

Perform the essential job functions physically. Maintain physical condition and fitness to meet the demands as follows:

- Sit for extended periods of time, positions oneself in front of various computer workstations, ability to function for extended periods of time.
- Carryout light physical work to include handling objects up to 20 pounds occasionally and/or up to 10 pounds frequently.
- Ability to carry out conversations and understand relevant facts of an urgent nature over the telephone and in person.
- Reach, hear, see, bend and touch within levels that the essential job functions can be accomplished.
- Climb ladders and/or step stools.

NECESSARY REQUIREMENTS

- Must pass a thorough background investigation, including but not limited to, a polygraph examination, psychological assessment and statement from a credit-reporting bureau.
- Applicants with a record of conviction for serious misdemeanors or felony crimes will be disqualified.
- Must be able to perform in a busy environment with frequent interruptions
- Employees are expected to follow all types of safety rules and use the department provided safety equipment, to include but not limited to seat belts, safety glasses, body armor, ear protection, etc.

EXHIBIT B

COMMENTS

The intent of this classification is to describe the types of job tasks and levels of responsibility and difficulty required of persons assigned to this classification title. This is not to be considered a detailed description of every duty/responsibility of the job.

The City of Black Hawk is an Equal Opportunity Employer. Pursuant to the *Immigrations Reform and Control Act,* it is the City's intention to hire only individuals who are United States citizens or aliens authorized to work and live in the United States

EXHIBIT B

CITY OF BLACK HAWK
~~2020~~ 2021 Job Description

JOB TITLE: Property & Evidence Technician **DEPARTMENT:** Police Department

REPORTS TO: ~~Administration Commander~~Records Supervisor **EXEMPT:** No

SALARY RANGE: $25.40 - $33.01 / HR

HIRING RANGE: $25.40 - $29.21 / HR

SUMMARY

The Evidence Technician is a non-sworn classified position responsible for providing functions associated with maintaining, disposing and processing evidence collected by officers on a daily basis. This employee must be a self-starter and work under a minimal amount of supervision. This employee has access to sensitive and confidential information and must be able to adhere to strict policies concerning evidence preservation. This employee must be able to communicate effectively with all employees within the City, in addition to law enforcement agencies, vendors, and citizens. The employee must be able to prioritize the workload and effectively multi-task. It is necessary for the employee to be very knowledgeable in the area of grammar and spelling.

ESSENTIAL DUTIES AND RESPONSIBILITIES

- Maintains a running inventory of all equipment in the department as well as drug testing kits and blood testing supplies, evidence packaging supplies.
- Prepares packages for certified and insured mailings associated with evidence functions.
- Assists with creating and updating Standard Operating Procedures.
- Creates a monthly report for incoming evidence and disposal of evidence.
- Effectively represents the organization to department employees, customers, other City departments, other criminal justice agencies, and the general public.
- Composes a variety of correspondence independently without verbal or written instruction.
- Retrieves evidence from patrol evidence lockers, logs evidence into the evidence software, and stores in evidence vault daily.
- Maintenance and cleaning of drying bins used for wet and bloody clothing.
- Trains officers on proper evidence processing and packaging.
- Tracks evidence to be returned, destroyed, auctioned, or transferred to other agencies in a timely and legal manner.
- Coordinates drug burns with other agencies.
- Meets with victims, attorneys, and other law enforcement agencies as needed. Acts as a liaison between the department and other agencies as needed in the judicial process, including testifying in court cases relevant to the Chain of Custody.
- Meets with families of suicide and homicide victims and work closely with District Attorney so victim's property can be returned to family.

- Maintain all property and evidence in a secure environment which can be located promptly.
- Send post cards and certified mailings to legal owners of property for their return. Keep track of time line on personal property for timely destruction or release.
- Must be capable of testifying in court regarding evidence chain of custody.
- Research surveillance and audio files and make appropriate copies.
- Send copies of evidence to the District Attorney, defendant's, victims, City of Black Hawk representatives, attorneys, and other Agencies.
- Understands State Statutes and City Ordinances regarding evidence storage, disposition, and retention.
- Handles potentially hazardous materials and stores them properly to ensure employee safety and evidence integrity.
- Responds to crime scenes when needed.
- Handles firearms, drugs, and contaminated items safely.
- Ensures annual audit of the Evidence room is conducted.
- Cleans equipment as needed and identifies equipment needing repairs.
- Checks in and out evidence to Colorado Bureau of Investigation for testing.
- Checks in and out evidence to detectives and patrol officers for court appearances.
- As necessary, pick up evidence items from Jefferson County District Attorney at Jefferson County Courts.
- Maintains the satellite evidence vault.
- Ensure proper storage of DNA, blood, and sexual assault kits.
- Conducts research into cases as needed.
- Performs data entry functions.
- Typing and filing as needed.
- Scans documents.
- Ability to wear necessary safety equipment while performing necessary job duties.
- Manage impounded vehicle inventory.
- Maintains the Department's inventory.

SUPERVISION RESPONSIBILITIES

Supervise as prescribed by law the destruction of evidence including, but not limited to, hazardous materials, drugs, and personal property. Supervise yearly complete and accurate audit of evidence vaults. No employee supervision responsibilities.

MINIMUM QUALIFICATIONS

Knowledge of:

- Modern office procedures, techniques, and equipment.
- Software programs such as Microsoft Word, Excel, PowerPoint, and Outlook.
- Proper work ethics and etiquette on the telephone and in person with co-workers, vendors, citizens, visitors, District Attorneys, other law enforcement agencies, Colorado Bureau of Investigations, suspects, and victims.
- Numerical and alphabetical filing systems.

- Lexus Nexis for research on defendants, statute of limitations, and permanent cases.
- Totally responsible for the function and operation of evidence section.

Ability to:

- Follow precise directions given by supervisors and working under minimal supervision.
- Work in an enclosed environment.
- Understand clerical support operations.
- Be a skilled problem solver to achieve logical solutions.
- Use resources effectively and efficiently.
- Maintain confidentiality of very sensitive information.
- Discern difference between original and duplicate documents.
- Anticipate and identify needs of the department and advise supervisor.
- Be a team player and to establish and maintain an effective and responsive working relationship with peers.
- Maintain a professional demeanor in and out of the office.
- Work on projects with brief deadlines, exercising sound judgment when prioritizing work.
- Operate a City vehicle for transporting evidence.
- Handle hazardous materials such as syringes, blood, razor blades, ammunition, firearms, drugs, knives, and other weapons in a safe manner.
- Establish and maintain cooperative working relationships with those contacted in the course of work.

PHYSICAL DEMANDS

Ability to perform the essential physical job functions. Maintain physical condition and fitness to meet the demands as follows:

- Sit for extended periods of time; perform job functions positioned in front of various computer workstations for extended periods of time.
- Carryout light physical work to include occasionally handling objects up to 25 pounds and/or up to 10 pounds frequently.
- Reach overhead and bend down to retrieve items and documents from various locations.
- Hear within an acceptable range to carryout conversations and understand relevant facts of an urgent nature over the telephone and in person.
- Reach, stoop, hear, see, bend, and touch within levels that the essential job functions can be accomplished.
- Climb ladders and/or step stools.

NECESSARY REQUIREMENTS

- Must be able to pass a thorough background investigation, including but not limited to, a polygraph examination, psychological assessment, and statement from a Credit Reporting

Bureau. Applicants with a record of conviction for serious misdemeanors or felony crimes will be disqualified.

- Must be able to perform in a busy environment with frequent interruptions.
- Employees are expected to follow all types of safety rules and use the department provided safety equipment to include, but not limited to, seat belts, body armor, safety glasses, ear protection, etc.

EXPERIENCE and/or TRAINING

- Two years office work experience with customer service experience.
- High School Diploma or GED
- Must possess a valid Colorado driver's license with a good driving record.
- Must be able to obtain necessary "Property and Evidence" certifications within one year of employment.

COMMENTS

The intent of this classification is to describe the types of job tasks and levels of responsibility and difficulty required of persons assigned to this classification title. This is not to be considered a detailed description of every duty/responsibility of the job.

The City of Black Hawk is an Equal Opportunity Employer. Pursuant to the *Immigrations Reform and Control Act,* it is the City's intention to hire only individuals who are United States citizens or aliens authorized to work and live in the United States.

I have read and fully understand the duties of the job description.

Sign: _____ Date: _____

RESOLUTION 7-2021

A RESOLUTION RATIFYING THE APPROVAL OF THE SECOND AMENDMENT TO SUBDIVISION AGREEMENT BETWEEN THE CITY OF BLACK HAWK, COLORADO AND MONARCH GROWTH, INC.

STATE OF COLORADO
COUNTY OF GILPIN
CITY OF BLACK HAWK

Resolution No. 7-2021

TITLE: **A RESOLUTION RATIFYING THE APPROVAL OF THE SECOND AMENDMENT TO SUBDIVISION AGREEMENT BETWEEN THE CITY OF BLACK HAWK, COLORADO AND MONARCH GROWTH, INC.**

NOW, THEREFORE, BE IT RESOLVED BY THE CITY COUNCIL OF THE CITY OF BLACK HAWK, COLORADO, THAT:

Section 1. The approval of the Second Amendment to Subdivision Agreement by and between the City of Black Hawk and Monarch Growth, Inc., attached hereto as **Exhibit A**, is hereby ratified, and the Mayor is authorized to execute the same on behalf of the City.

RESOLVED AND PASSED this 13th day of January, 2021.

_____
David D. Spellman, Mayor

ATTEST:

_____
Melissa A. Greiner, CMC, City Clerk

CITY OF BLACK HAWK
REQUEST FOR COUNCIL ACTION

SUBJECT: Ratification of the Approval of the Second Amendment to Subdivision Agreement

RECOMMENDATION: Staff recommends the following motion to the Mayor and Board of Aldermen:

MOTION TO APPROVE Resolution No. 7-2021, a Resolution ratifying the Approval of the Second Amendment to Subdivision Agreement between the City of Black Hawk and Monarch Growth, Inc.

SUMMARY AND BACKGROUND OF SUBJECT MATTER:
On April 10, 2013, the City Council approved the Subdivision Agreement between the City and the Developer, Monarch Growth, Inc., as amended by the First Amendment to Subdivision Agreement, dated February 12, 2014 (collectively, the "Original Subdivision Agreement"), which contains certain conditions and legal obligations to be performed by the Developer as a condition of the City's approval of the final plat.

The City and Developer now desire to amend the Original Subdivision Agreement to effectuate both memorializing the process for completing the public improvement obligations and ensuring that the Developer obtains a final Certificate of Occupancy for the private improvements that are subject to various building permits previously issued by the City.

AGENDA DATE:	January 13, 2021
WORKSHOP DATE:	N/A
FUNDING SOURCE:	N/A
DEPARTMENT DIRECTOR APPROVAL:	[X]Yes [ ]No
STAFF PERSON RESPONSIBLE:	Cynthia L. Linker CP&D Director
DOCUMENTS ATTACHED:	Resolution 7-2021
RECORD:	[X]Yes [ ]No
CITY ATTORNEY REVIEW:	[X]Yes [ ]N/A

SUBMITTED BY:

Cynthia L. Linker

Cynthia L. Linker, CP&D Director

REVIEWED BY:

Stephen N. Cole

Stephen N. Cole, City Manager

SECOND AMENDMENT TO SUBDIVISION AGREEMENT

THIS SECOND AMENDMENT TO SUBDIVISION AGREEMENT (the "Second Amendment") is made this_____day of_____, 2020, by and between the CITY OF BLACK HAWK, COLORADO (the "City") and MONARCH GROWTH, INC. (the "Developer").

RECITALS:

A. The Developer is the owner of certain real property located in the City known generally as the Monarch Casino, which is more particularly described in **Exhibit A** attached hereto and made a part hereof (the "Property").

B. On April 10, 2013, the City Council approved the Subdivision Agreement between the City and the Developer, as amended by the First Amendment to Subdivision Agreement, dated February 17, 2014 (collectively, the "Original Subdivision Agreement"), which contains certain conditions and legal obligations to be performed by the Developer as a condition of the City's approval of the final plat.

C. The City and Developer desire to amend the Original Subdivision Agreement to effectuate both memorializing the process for completing the public improvement obligations, and to assure that the Developer obtains a final Certificate of Occupancy for the private improvements that are subject to various building permits previously issued by the City.

AGREEMENT:

NOW, THEREFORE, for and in consideration of the mutual promises and covenants contained herein, the sufficiency of which are mutually acknowledged, the parties hereto agree as follows:

1. Completion of Public Improvements. The City hereby approves on a probationary basis all water lines, fire hydrants, water distribution facilities, drainage structures, paved streets, including curb and gutter, and necessary appurtenances as shown on the subdivision plat and the associated construction documents (the "Public Improvements") as approved by the Director of Public Works of the City, except as specifically provided in Section 2 and 3 below. Developer hereby warrants such Public Improvements that are accepted on a probationary basis for a period of two (2) years from the date of this Second Amendment.

2. Fire Suppression Line. The City and Developer agree that the existing Fire Suppression Line within the Developer's existing casino property, which prior to the improvements constructed by Developer was the original domestic and fire combination service line for the Property is hereby determined to be a private improvement (by virtue of the reimbursement for domestic abandonment and retaining fire suppression), and Developer shall be responsible for the maintenance and repair of such fire suppression line from the connection to the Developer's private improvements to the City's main water line. This obligation shall be binding upon all successors and assigns.

3. Public Improvements Not Accepted Pursuant to this Second Amendment. The following categories of public improvements are not accepted hereunder:

(a) Landscaping Improvements. The Developer shall have until June 30, 2021 to complete the landscaping improvements required by the Original Subdivision Agreement;

(b) Pedestrian Sidewalk Ramps and Sidewalk Adjacent to the Bus Turnaround Area. The Developer shall have until June 30, 2021 to complete the pedestrian sidewalk ramps and sidewalk adjacent to the bus turnaround area as required by the Original Subdivision Agreement, and to the standards set forth in the Americans' With Disability Act (the "ADA"). Developer specifically agrees to indemnify and hold harmless the City for any and all claims, injuries or lawsuits associated with the any non-compliant ramps and sidewalks, including, but not limited to, any claims related in any manner to any non-compliant ramps and sidewalks, and including any costs to repair or replace any non-compliant ramps and sidewalks. This obligation shall be binding upon all successors and assigns, and shall terminate once Developer has completed any work to ensure the ramps and sidewalks comply with applicable ADA standards. Developer will continue to maintain the area as a bus stop for the Black Hawk Central City shuttle service, among Monarch's other uses. Failure to maintain the stop will result in the termination of shuttle service at that location.

This specific indemnity obligation is in addition to the indemnity obligations set forth in Section 13 of the Original Subdivision Agreement;

(c) Bus stop signage and history board, which are still required to be installed;

(d) Those public improvements which the City is unable to inspect due to adverse weather conditions including snow and ice and ongoing construction storage obscuring appropriate inspection. Items include concrete, asphalt, curb and gutter in the area known as the bus turnaround area. Any items that cannot be inspected and require repair will be subject to the warranty following their probationary acceptance; and

(e) Snow melt mechanical system used to heat sidewalks and ramps. The system must function to reduce ice and snow on sidewalks as specified in the Original Subdivision Agreement.

4. Performance Guarantee. The City and Developer acknowledge and agree that the City is currently holding the amount of **Nine Hundred Eight Thousand, One Hundred and Sixty Dollars ($908,160.00)** pursuant to Section 12 of the Original Subdivision Agreement (the "Cash Security"). The Cash Security shall be disbursed by the City as follows:

(a) Upon final approval of this Second Amendment, the City will retain ten percent (10%) of the Cash Security, or the amount of **Eighty-Two Thousand, Five Hundred and Sixty Dollars ($82,560.00)** for the two-year warranty period hereunder, and the amount of **One Hundred Twenty Thousand Three Hundred Thirty Dollars ($120,330.00)** as security for the uncompleted public improvements, for the total amount of **Two Hundred Two Thousand Eight Hundred Ninety Dollars ($202,890.00)**; and

(b) The City shall transfer the balance of the Cash Security of **Seven Hundred Five Thousand, Two Hundred Seventy Dollars ($705,270.00)**, to be used as security for the Developer obtaining its final Certificates of Occupancy for the parking garage and the hotel tower more particularly described in Section 5 hereunder.

5. Security for final Certificate of Occupancy. The City and Developer agree that the City is willing to issue Temporary Certificates of Occupancy (collectively, the "TCOs", or individually a "TCO") for (A) the Developer's parking garage (the "Parking Garage"), and (B)the Developer's hotel tower (the "Hotel Tower") subject to building inspection and acceptance necessary for issuing a TCO. However, to secure Developer's obligation to complete the remaining public & private improvements necessary to obtain final Certificates of Occupancy no later than **June 30, 2021**, Developer consents to the City holding as security for completion of the items identified in **Exhibit B**, attached hereto and incorporated herein by this reference the amount of **Seven Hundred Five Thousand, Two Hundred Seventy Dollars ($705,270.00)** (the "TCO Security"). The TCO Security shall be released as follows:

(a) Upon completion of the items identified in Exhibit B, provided such completion occurs on or before **June 30, 2021**;

(b) In the event Developer has not completed the items set forth in Exhibit B by **June 30, 2021**, the City shall have the following remedies:

(i) The City may on July 1, 2021, and on the first day of every month thereafter, until the items set forth on Exhibit B have been completed by the Developer, draw down on the TCO Security at a rate of One Percent (1%) per month. Such TCO Security funds that are drawn down by the City shall be a penalty to the Developer for noncompliance with the conditions of the TCOs, and such penalty shall continue on a monthly basis until final Certificates of Occupancy are issued by the City for the Parking Garage and the Hotel Tower; and

(ii) The City is hereby authorized, in addition to collecting the penalty for noncompliance with the conditions of the TCOs, to further determine to revoke the TCO for the Parking Garage, the TCO for the Hotel Tower, or both such TCOs, if the City determines, based on a good faith and commercially reasonable determination, that continued noncompliance results in a public safety risk.

(iii) The City will consider a waiver of the aforementioned penalties for good cause based on delays related to circumstances beyond Developer's reasonable control.

(c) In the event Developer completes the items identified in Exhibit B after June 30, 2021, Developer shall be entitled to the return of the TCO Security, less any amounts withheld as a penalty pursuant to subsection (b)(i) hereinabove.

(d) The City and Developer agree to meet in January of 2021, and periodically as necessary thereafter to assure that the City and the Developer have a mutual understanding as to

the items remaining on Exhibit B that need to be completed before June 30, 2021.

6. Miscellaneous. The following provisions shall apply with respect to this Second Amendment:

(a) Except as modified herein, the Original Subdivision Agreement is in full force and effect and is hereby ratified by the City and the Developer.

(b) Capitalized terms not defined herein shall have the same meaning as set forth in the Subdivision Agreement.

(c) In the event of any conflict between the Original Subdivision Agreement and this Second Amendment, the terms and conditions of this Second Amendment shall control.

(d) This Second Amendment may be executed in counterparts, each of which (or any combination of which) when signed by all of the parties shall be deemed an original, but all of which when taken together shall constitute one agreement. Executed copies hereof may be delivered by telecopier and upon receipt shall be deemed originals and binding upon the parties hereto, and actual originals shall be promptly delivered thereafter.

WHEREFORE, the parties hereto have executed this Second Amendment on the day and year first above-written.

CITY OF BLACK HAWK, COLORADO

By:_____
David D. Spellman, Mayor

ATTEST:

_____
Melissa A. Greiner, CMC, City Clerk

APPROVED AS TO FORM:

_____
Corey Y. Hoffmann, City Attorney

DEVELOPER:
MONARCH GROWTH, INC.

By: _____
Name: John Farahi
Title: CEO

STATE OF NEVADA)
) ss.
COUNTY OF WASHOE)

The foregoing instrument was subscribed, sworn to, and acknowledged before me this 22nd day of December, 2020, by JOHN FARAHI as the Chief Executive Officer of Monarch Growth, Inc.

My commission expires: 12/2/24

_____
Notary Public

KRISTY L. HILL
Notary Public - State of Nevada
Appointment Recorded in Washoe County
No: 04-93165-2 - Expires December 2, 2024

EXHIBIT A

ALL OF LOT 1, BLOCK 1, RIVIERA HOTEL AND CASINO, BLACK HAWK MINOR SUBDIVISION (BOOK 663, PAGE 212) AND A PORTION OF MILL SITES 42,43, AND 44, CITY OF BLACK HAWK BEING DESCRIBED BY WESTERN STATES SURVEY INC. AND COURT ORDERED DECREE, CASE NO. 2006 CV 49 AND QUIT CLAIMED DEED RECORDED IN BOOK 555, PAGES 244–247 AND EXCLUDING THERE FROM THAT PORTION RECORDED UNDER RECEPTION NO. 144121 AND A PORTION OF LAND LOCATED WITHIN MAIN STREET PUBLIC RIGHT–OF–WAY, AS SHOWN ON THE ALBERT JOHNSON MAP OF BLACK HAWK, DATED MAY AND JUNE 1866 AND THAT PARCEL DEEDED FROM THE CITY OF BLACK HAWK IN 2013 AND ALL SAID PARCELS BEING LOCATED WITHIN THE SOUTHEAST QUARTER OF SECTION 7, TOWNSHIP 3 SOUTH, RANGE 72 WEST OF THE SIXTH PRINCIPAL MERIDIAN, CITY OF BLACK HAWK, COUNTY OF GILPIN, STATE OF COLORADO BEING MORE PARTICULARLY DESCRIBED AS FOLLOWS:

COMMENCING AT THE SOUTHEAST CORNER OF SAID SECTION 7; THENCE N06°55'50"W, 915.98 FEET TO A POINT ON THE NORTHERLY MAIN STREET RIGHT–OF–WAY AND THE TRUE POINT OF BEGINNING; THENCE ALONG SAID RIGHT–OF–WAY THE FOLLOWING TEN (10) CONSECUTIVE COURSES: 1) THENCE N72°00'00"W, 149.27; 2) THENCE S13°53'59"W, 15.80 FEET TO A POINT OF CURVATURE; 3) THENCE 15.71 FEET ALONG A CURVE TO THE RIGHT HAVING A RADIUS OF 10.00 FEET, A CENTRAL ANGLE OF 90°00'37" AND A CHORD WHICH BEARS S58°54'18"W, 14.14 FEET TO A POINT OF TANGENCY; 4) THENCE N76°05'24"W, 86.82 FEET; 5) THENCE N68°13'22"W, 33.80 FEET; 6) THENCE N71°24'08"W, 33.65 FEET; 7) THENCE N76°5'24"W, 51.43 FEET; 8) THENCE N82°55'40"W, 49.82 FEET; 9) THENCE N82°55'06"W, 69.82 FEET; 10) THENCE S83°38'00"W, 44.90 FEET TO THE POINT OF INTERSECTION WITH A SOUTHERLY LINE OF SAID MILL SITE 42 AND THE NORTHERLY LINE OF A PARCEL RECORDED UNDER RECEPTION NO. 144121; THENCE ALONG SAID PARCEL THE FOLLOWING TWO (2) CONSECUTIVE COURSES: 1) THENCE N79°38'17"W, 39.74 FEET; 2) THENCE N73°53'12"W, 34.37 FEET TO A POINT ON THE WESTERLY LINE OF SAID PARCEL RECORDED IN BOOK 555, PAGE 244–247; THENCE ALONG SAID WESTERLY LINE N12°21'00"E, 18.76 FEET TO THE NORTHERLY RIGHT–OF–WAY LINE OF MAIN STREET; THENCE ALONG SAID NORTHERLY RIGHT–OF–WAY LINE N83°21'31"W, 40.14 FEET TO THE SOUTHERLY LINE OF SAID LOT 1, BLOCK 1; THENCE ALONG THE SOUTHERLY LINE OF SAID LOT 1, BLOCK 1, AND THE NORTHERLY RIGHT–OF–WAY LINE OF MAIN STREET THE FOLLOWING SIX (6) CONSECUTIVE COURSES: 1) THENCE N83°38'10"W, 288.90 FEET; 2) THENCE N79°40'00"W, 349.39 FEET; 3) THENCE S14°50'11"E, 5.71 FEET; 4) THENCE N78°43'47"W, 30.68 FEET; 5) THENCE 90.30 FEET ALONG A CURVE TO THE RIGHT HAVING A RADIUS OF 60.00 FEET, A CENTRAL ANGLE OF 86°13'47" AND A CHORD WHICH BEARS N35°36'54"W, 82.02 FEET; 6) THENCE N07°30'00"E, 30.80 FEET TO THE SOUTHERLY RIGHT–OF–WAY LINE OF COLORADO STATE HIGHWAY 119 AND THE NORTHERLY LINE OF SAID LOT 1; THENCE ALONG THE NORTHERLY LINE OF SAID LOT 1 THE FOLLOWING THREE (3) CONSECUTIVE COURSES: 1) THENCE S81°24'56"E, 516.30 FEET; 2) THENCE 265.24 FEET ALONG A CURVE TO THE LEFT HAVING A RADIUS OF 1,532.50 FEET, A CENTRAL ANGLE OF 09°55'00" AND A CHORD WHICH BEARS S86°22'26"E, 264.91 FEET; 3) THENCE N88°40'04"E, 4.37 FEET TO THE WESTERLY LINE OF SAID PARCEL RECORDED IN BOOK 555, PAGES 244–247; THENCE ALONG SAID WESTERLY LINE THE FOLLOWING TWO (2) CONSECUTIVE COURSES: 1) THENCE N12°21'00"E, 1.84 FEET; 2) THENCE N88°43'07"E, 50.25 FEET TO A POINT ON THE SOUTHERLY RIGHT–OF–WAY LINE OF COLORADO STATE HIGHWAY 119 AND THE NORTHERLY LINE OF A PARCEL DESCRIBED IN SAID COURT ORDERED DECREE; THENCE ALONG SAID PARCEL THE FOLLOWING THREE (3) CONSECUTIVE COURSES: 1) THENCE 465.10 FEET ALONG A CURVE TO THE RIGHT HAVING A RADIUS OF 718.60 FEET, A CENTRAL ANGLE OF 37°05'00" AND A CHORD WHICH BEARS S72°44'23"E, 457.02 FEET; 2) THENCE S54°11'53"E, 6.45 FEET; 3) THENCE S32°28'22"E, 108.60 FEET TO THE EASTERLY LINE OF SAID MILL SITE 44 AND THE TRUE POINT OF BEGINNING. SAID PARCEL CONTAINS 140,090 SQUARE FEET, (3.2160 ACRES), MORE OR LESS

BASIS OF BEARINGS: BEARINGS ARE BASED ON AN ASSUMED BEARING OF N00°12'18"E, ALONG THE EASTERLY LINE OF THE SOUTHEAST QUARTER OF SECTION 7, TOWNSHIP 3 SOUTH, RANGE 72 WEST OF THE SIXTH PRINCIPAL MERIDIAN, AND BEING MONUMENTED BY A FOUND 3 ¼" BRASS CAP IN A MOUND OF STONES (BLM 1978) AT THE SOUTHEAST CORNER OF SAID SECTION AND A FOUND 1 1/2" ALUMINUM CAP P.L.S. NO. 865 AT THE EAST QUARTER CORNER OF SAID SECTION.

EXHIBIT B

DEVELOPER'S OBLIGATION
COMPLETION OF THE REMAINING PUBLIC AND PRIVATE IMPROVEMENTS

BASELINE – LAND USE:

Provide updated mylars for Tower/Podium SDP/COAC

BP 14-089 Monarch Garage

1. Garage TCO dated 8/22/2017:

a. General Site Items:

Item No. 8. Install permanent landscaping in designated areas along the sidewalk.

Item No. 9. Finalize striping per approved striping plan.

b. Site-Specific Items:

Item No. 10. Confirm Monarch will replace the paved area due south of the original parking garage paved on 11/8/16. Monarch shall replace as part of the next phase of the Monarch Casino construction. The paving slopes and conditions do not meet the design or City standards for acceptance as a permanent installation.

Item No. 13. Backfill along the north and west edges of the easternmost sidewalk.

c. Repair or Replacement at Surface Improvements:

Item No. 20. Bring curb ramps at east and north ends of turnaround area up to ADA requirements.

Item No. 21. Bring sidewalk north of the turnaround area up to ADA requirements.

Item No. 22. Bring sidewalk west of the turnaround area up to ADA requirements.

Item No. 23. Remove plastic on all truncated domes.

d. Fire Department:

Item No. 7. Install the Fire Pump Fill. Have inspected and approved by the Fire Department.

e. Baseline:
South Elevation/Main Street
Item No. 2. Provide a detailed Landscape Plan for four remaining and existing dirt areas along the Main Street sidewalk. Until Spring 2017, place fabric and river rock in each area. With Landscape Plan approval, place permanent material, and includes all landscape areas at the east end of the structure next to the bus turnaround.
Item No. 5. Grease trap and Sand Interceptor pipes are wrapped in a light grey color insulated cover. Propose alternate colors and replace them.
South Elevation
Item No. 2. Ensure all parking stalls in the garage are painted accordingly on all levels. Counting of stalls by Baseline will occur when access to the entire garage is provided.

f. Miscellaneous:
Parking Garage Certificate of Occupancy Issued by Colorado Code Consultants.
Hotel Tower Certificate of Occupancy Issued by SAFEbuilt.

2. Monarch Garage SDP/COAC – Approved COAC is Amendment No. 2 dated December 19, 2019

3. General design of the garage exterior to determine what items may be necessary for inclusion in the as-built drawings.

BP 16-057 Monarch Hotel Tower

1. Hotel Tower SDP/COAC – Approved COAC is Amendment No. 1 dated September 17, 2019
a. Main Street striping including cross walk and bus stop
b. .
c. General design of the podium and tower – locations of windows and doors, use of architectural elements, columns, building materials and colors, roof finish, etc.
d. Porte cochere design (including planters), materials and colors
e. Sidewalks, ADA ramps and cross walk striping
f. Exterior Tower façade lighting

BP 17-017 Monarch Exterior Façade North Elevation

1. Exterior Façade Remodel COAC North Elevation - Approved COAC is Amendment No. 4 dated October 7, 2019
a. Sidewalks, ADA ramps and cross walk striping
b. General design of the north exterior elevation – locations of windows and doors, use of architectural elements, columns, building materials and colors, roof finish, etc.
c. Exterior pedestrian lighting including fixture on the façade and street lights.

BP 17-070 Monarch Exterior Façade South and West Elevations

1. Exterior Façade Remodel COAC South and West Elevations – Approved COAC is Amendment No. 4 dated October 7, 2019
   - **a.** Sidewalks, ADA ramps and cross walk striping
   - **b.** General design of the south and west exterior elevations – locations of windows and doors, use of architectural elements, columns, building materials and colors, roof finish, etc.
   - **c.** Landscaping, benches, trash receptacles, planters, pavers, retaining boulders, fire feature
   - **d.** Landscape lighting
   - **e.** Exterior pedestrian lighting including fixture on the façade and street lights.

BP 18-043 Monarch Signage

1. Comprehensive Sign Plan – Approved CSP Amendment is dated July 29, 2020
   a. Number, size and location of signs

BLACK HAWK / CENTRAL CITY SANITATION DISTRICT:

Final verification of fixture counts will be completed by the end of the first quarter of 2021.

COMMUNITY PLANNING AND DEVELOPMENT:

BP 14-089 Monarch Garage

1. Remove in their entirety Temporary Construction offices.
2. Removal of temporary storage areas.
3. Final inspections by SAFEbuilt and CCC
   a. Monarch to provide accessibility and emergency egress

BP 16-057 Monarch Hotel Tower

1. Complete building and planning inspections
2. Remove all temporary construction offices.

BP 17-017 Monarch Exterior Façade North Elevation

1. Complete planning inspections

BP 17-070 Monarch Exterior Façade South and West Elevations

1. Complete planning inspections

BP 18-043 Monarch Signage

1. Complete building and planning inspections

BP 20-033 Monarch Signage – Exit & Butterfly

1. Complete building and planning inspections

Subdivision Agreement – Specific Conditions:

a. Storm Drainage Improvements proposed to be constructed include approximately six hundred and eighty-five (685) feet of forty-eight (48) inch storm sewer pipe including manholes. Storm sewer will be located along Main Street draining toward the east and then discharging into Clear Creek
- **Final inspection required**

b. Construction of accel/decal lanes including asphalt widening, curb, gutter and sidewalk on the north side of the street along the entire frontage of the proposed development except for those portions already within the Main Street right-of-way as depicted on Exhibit B
- **Final inspection required**

c. Construction of a Creekside trail will be done along the north side of the new garage and hotel structures. This trail will be nearly seven hundred (700) feet in length and approximately seven and one half (7 ½) feet in width. It will be constructed with a heated snow melt system and will have a forty-two (42) inch tall metal guardrail on its outer side toward the creek where required by adjacent grade based on the International Building Code requirements
- **Final inspection required**

d. Lighting will be provided with approximately eleven (11) street lights along the north side of Main Street in a fashion that mirrors the street light pattern on the south side of Main Street directly across the street. Along the Creekside trail, lighting will also be provided for pedestrians for the entire length for night-time visibility and safety.
- **Final Inspection required**

e. Construction and dedication of a new bus turnaround, parking lot, and trail head will be done on the eastern most portion of the new garage. This includes the dedication of Tract B consisting of 0.18 acre. Improvements include ten (10) parking spaces, turnaround drive, and sidewalk to the trailhead and Creekside trail.
- **Tract was dedicated to the City, then City vacated it back to Monarch. Monarch owns and must maintain.**
- **Final Inspection required for all improvements.**

f. Creek improvements include the discharge of the rerouted storm sewer system and minimal landscaping improvements along the north side of the new garage. No significant improvements to the creek are anticipated with the project.
- **Final Inspection required**

g. Striping will be provided for the new parking stalls and drive lanes in the new parking garage. Stop signs will be placed at exits of the new garage. Way finding signs will also be provided to direct pedestrians to the new casino and hotel when completed.
- **Final Inspection required**

h. Developer shall, prior to recordation of final pat for the Property, petition for inclusion in the Silver Dollar Metropolitan District that portion of the Property not included within the Property as of the date of this Agreement.
- **Confirmation required**

i. Developer acknowledges its obligation to satisfy the terms and conditions required by the Colorado Department of Transportation ("CDOT") related to use of the CDOT right-of-way in connection with the development of the Property. The approvals herein shall be contingent upon satisfaction of the terms and conditions imposed upon Developer by CDOT.
- **Confirmation required**

FIRE DEPARTMENT:

1. Verify the installation of an additional sprinkler head in the 23rd floor mechanical mezzanine.

2. Verify 23rd floor aqua lounge ceiling pocket depth does not exceed 36 inches.

3. Inspect floors 15 to 23.

4. Place fire equipment in cache rooms (Fire Department item).

5. BP 17-065 Monarch Hotel Tower Fire Suppression System Sprinklers

6. BP 18-008 Monarch Hotel Tower Fire Alarm System

7. Follow up on storage under existing casino, valet parking area (requirement of removal attached to Tower 16-00057)

8. Existing parking garage office space must be vacated (tied to parking garage 14-089)

PUBLIC WORKS:

1. The current project that Roche is doing is blocking a portion of the traveled way with the dumpsters and scaffolding. There is no Right-of Way use permit for this work in the roadway.

2. When PCL does not have their diversions in place, the scaffolding sticks right out into the roadway. Please address this ASAP.

3. There also seems to be a snow/ice issue along your frontage. When your contractors have the diversions in place, my staff is unable to properly complete snow/ice removal activities. When your contractors pull their diversions, there remains large piles of ice and snow creating a hazardous situation for the traveling public. Your team will need to address these snow and ice issues at this point.

4. The bus turnaround on the east side of the garage is still absolutely loaded with stuff. We need to know when this will be cleared as the City has an easement for this to turn buses around in. We need to have access to this when we restart the service. There also is no permanent location for the Monarch bus stop identified anywhere. This includes the need to reinstall the bus stop sign and lollypop. Please let me know when this will be accomplished.

5. There is still the outstanding issue with the sidewalks and ramps at the bus turn around which are not ADA compliant.

6. There is still curb and gutter and asphalt along Main Street that to my knowledge has never been repaired (loading dock area).

SAFEBUILT:

Building Inspections:

1. Complete all final inspections for floors 14-23.

Final Plumbing – complete through 17
Final Electrical – complete through 13
Final Mechanical – complete through 20
Final Building – partially approved through 18, no final approval until MEP's are complete.

2. Close out all open and active RFIs and provide documentation.

i. **Level 3 Area C Design Constraints**
ii. **Level 23 – Trench Drain Repair, Waterproofing Issues**
iii. **T-Rating at FCU Plumbing**
iv. **Electrical Room T-Ratings Follow Up**
v. **RFI 2949 JKPS and JKP GFCI**
vi. **Vanity Skirt Conflicts**
vii. **RFI 1266.3 L3 Buffet Track Lighting**
viii. **Expansion Joint Tie in and Water Tight Seal**
ix. **Interior Window Caulk Joint Level 22**
x. **Tower Kickout Flashing**

3. Apply for plumbing permit to connect the waterlines in the garage. Provide plumbing plan for review – standard permit fees apply. Water and SAFEbuilt will review and inspect.

CONSIDERATION OF APPROVAL TO WAIVE PETITIONING REQUIREMENTS FOR CHICAGO DOGS EATERY, INC. CHANGE OF LOCATION

CITY OF BLACK HAWK
REQUEST FOR COUNCIL ACTION

SUBJECT: Chicago Dogs Eatery, Inc. Change of Location application.

RECOMMENDATION: Staff recommends the following motion to the Mayor and Board of Aldermen:

MOTION TO APPROVE waiving petitioning requirements for Chicago Dogs Eatery, Inc's Change of Location

SUMMARY AND BACKGROUND OF SUBJECT MATTER:

On August 2, 2019, Chicago Dogs Eatery received a Modification of Premise approval from the State. It has been determined that their modification was not contiguous within their current location, thus a Change in Location is required. The Tipton Law Firm submitted a Change of Location application on December 18, 2020. Under the Colorado Liquor Rules, Regulation 47-312(B) states the local or state licensing authority may, at its discretion, waive the neighborhood needs and desires assessment requirements should it determine that the new location remains within the same neighborhood as the old location. Chicago Dogs Eatery is moving from its current location (inside near old valet parking area) to a portion of the new Monarch hotel lobby in the podium.

AGENDA DATE: January 13, 2021

WORKSHOP DATE: N/A

FUNDING SOURCE: N/A

DEPARTMENT DIRECTOR APPROVAL: [X]Yes [ ]No

STAFF PERSON RESPONSIBLE: Melissa A. Greiner, City Clerk

DOCUMENTS ATTACHED: No

RECORD: [ ]Yes [X]No

CITY ATTORNEY REVIEW: [X]Yes [ ]N/A

SUBMITTED BY: **REVIEWED BY:**

Melissa A. Greiner, City Clerk

Stephen N. Cole, City Manager